AUTOMATIC TRANSMISSION PARTS CATALOG

- PARTES DE TRANSMISIONES AUTOMATICAS
- AUTOMATIKGETRIEBETEILE
- PIÈCES DE TRANSMISSIONS AUTOMATIQUES
- PEÇAS PARA TRANSMISSÕES AUTOMÁTICAS
- **ЗАПЧАСТЕЙ АВТОМАТИЧЕСКИХ КОРОБОК ПЕРЕДАЧ**

ALTO PRODUCTS CORP.

Alto Way • Atmore • AL • 36502 •USA • www.altousa.com
Tel: 251.368.7777 • Fax: 251.3687774 • sales@altousa.com

Automatic Transmission Parts Catalog

AUTOMOTIVE PARTS	(See Bookmarks)
Antique Section	
Domestic Manufacturers	
Asian & European Manufacturers	
Miscellaneous Transmission	
CVT & Dual Shaft Gear	
Transfer Case Listings (shown in bookmarks)	
Differential Listings (shown in bookmarks)	
Hardware	
Chemicals	

SPECIAL FEATURES
What's New in our 2010 Catalog?
Vehicle Index
Alto Transmission Series Chart
Alto Part Number Codes
Glossary of Terms: English to Spanish
REFERENCE CODES
GM Transmission Codes
Chrysler Transmission Codes
Honda Transmission Codes
Toyota Transmission Tag Numbers

MODEL YEAR IDENTIFICATION

Unless otherwise specified, years expressed in this catalog refer to the model year of the vehicle. Use the chart below to identify the model year represented by the tenth character of the VIN (Vehicle Identification Number).

The VIN is found on a sticker located on the driver's door and on a metal plate located at the bottom of the driver's side front windshield.

A -1980	F -1985	L -1990	S -1995	Y -2000	5-2005
B -1981	G -1986	M-1991	T-1996	1-2001	6 -2006
C -1982	H -1987	N-1992	V-1997	2-2002	7-2007
C -1983	J -1988	P-1993	W-1998	3-2003	8-2008
E -1984	K-1989	R - 1994	X-1999	4-2004	9-2009

Abbreviations & Ordering Notes

ORDERING NOTES
Super Kits - Add "SK" to Master Kit item number. Super Kits include Overhaul Kit, Friction/Steel Module and Band, Filter, Modulator, Bushing Kit, Washer Kit (subject to availability).
Farpak - Add "F" to Gasket item number.
Red Eagle Grooved Friction Clutches - Add "WF" for Waffle Groove or "PL" for Parallel Line Groove to Red Eagle Friction item number. For Grooving charge and Min. qty. contact Customer Service.

ABBREVIATION	TERM		ABBREVIATION	TERM
2wd	2 Wheel Drive		KOL	Kolene®
4wd	4 Wheel Drive		LRG	Large
BND	Band		OD	Outer Diameter
BLK	Black		OEI	Original Equipment Improvement™
BRK	Brake		OEM	Original Equipment Manufacturer
CBN	Carbonite®		PL	Parallel Line Grooved
DIR	Direct		PLNI	Parallel Line Non-Intersecting Grooved
DR	Drive		REV	Reverse
FLT	Filter		RR	Rear
F/D	Forward/Direct			
FRT	Front		RWD	Rear Wheel Drive
F/R	Front/Rear		SAD	Single Adjustable Diaphragm
FWD	Front Wheel Drive		SB	Sunburst Grooved
GSK	Gasket		SEL	Selective
GOV	Governor		SML	Small
GRN	Green		SMOOTH	Not Grooved
HEG	Hi-Energy Graphitic		TURB	Turbulator Holes
HP	Hi-Performance		W/	With
ID	Inside Diameter		W/O	Without
INT	Intermediate		WF	Waffle Grooved

DISCLAIMER

This catalog has been produced using the most up to date information available at the time of production. While the utmost care has been used to compile this information, we assume no responsibility for any errors, omissions, or the misapplications supplied to us. N ot all parts listed in this catalo g are stocked and are listed for reference only. Reference numbers and/or OEM numbers are listed solely for identification purposes, some numbers change frequently. Please check with your sales representative for more up to date information.

MADE IN U.S.A.

All Friction and Steel plates are manufactured by Alto Products Corp. in the USA. Overhaul kits may contain contents not of USA origin . Other than Friction and Steel plates, there are no representations made as to country of origin. For country of origin on a specific item, contact your sales representative.

TRADEMARKS

Red Eagle ®, Carbonite®, PowerPack®, and DrumSaver® are all registered trademarks of ALTO PRODUCTS CORP. KEVLAR® is a registered trademark of E.I. Dupont Corporation. KOLENE® is a registered trademark of Kolene Corporation. SHIFT KIT®, TRANSGO® Reprogramming Kit™ are registered trademarks of Transgo.

COPYRIGHT

Printed in the USA – All Rights Reserved. No part of this publication may be reproduced, stored in a retrieval system, or transmitted in any form or by any means; electronic, mechanical, photocopying, recording or otherwise without the express written consent of ALTO PRODUCTS CORP.

©2014 **ALTO PRODUCTS CORP**

What's New!

MFG	ALTO Series	DESCRIPTION	YEAR
G M	201000	6L50E, CTS, SRX, STS	2007-ON
G M	204000	6T40, 6T45	2008-ON
G M	205000	2ML70	2007-ON
G M	210000	6T30E Generation 2	2008-ON
ALLISON	152000	ALLISON 1000, 2000 SERIES	2010-ON
FORD	204000	6F35	2009-ON
FORD	206000	6R140	2011-ON
CHRYSLER	077000	62TE	2008-ON
CHRYSLER	128000	68RFE	2007-ON
CHRYSLER	202000	AS68RC	2007-ON
AW / BW	129000	TF60-SN, 09G	2003-ON
AW / BW	185000	TR60-SN	2004-ON
AW / BW	129000	TF70-SC	2005-ON
AW / BW	197000	AWF21, TF80-SC, AF40-6, AM6, AW6A-EL	2005-ON
HYUNDAI/KIA	212000	A6GF1/2	2009-ON
HYUNDAI/KIA	213000	A6LF2	2009-ON
HYUNDAI/KIA	214000	A6MF1/2/3	2009-ON
MAZDA	39000	RC4AEL, JR405E	2004-ON
MERCEDES	189000	722.9	2004-ON
VOLVO	209000	SPS6/6DCT470, MPS6/6DCT450 GETRAG 6 SPEED	2008-ON
NISSAN	181000	RE0F06A CVT	1996-ON
NISSAN	181000	RE0F09A CVT	2003-ON
TOYOTA	199000	U660E	2007-ON
TOYOTA	203000	A960E	2006-ON
TOYOTA	207000	AA80E	2007-ON
TOYOTA	208000	AB60E/F	2007-ON
TOYOTA	186000	TOYOTA K310 CVT	
VW / AUDI	211000	DSG 7 SPEED	2007-ON
Z F	143000	ZF6HP19	2004-ON
Z F	183000	ZF6HP26	2002-ON

VEHICLE INDEX

ACURA

MODEL	YEAR	ENGINE	TRANS
2.2CL	1996-97	L4, 2.2L	A6VA
2.3CL	1998-99	L4, 2.3L	B6VA
3.2TL	2001-03	V6, 3.2L	B7WA
2.5TL	1995-98	L5, 2.5L	M1WA
3.5RL	1996-04	V6, 3.5L	M5DA
Integra	1986-87	L4, 1.6L	CA
Integra	1988-89	L4, 1.6L	PI
3.0CL	1996-99	V6, 3.0L	M7ZA
Integra	1990	L4, 1.8L	RO
Integra	1991-93	L4, 1.8L	MPRA
Integra	1994-99	L4, 1.8L	MP7A, SP7A, S4XA
Integra	2000-On	L4, 1.8L	SKWA
3.2CL	2000-03	V6, 3.2L	MGFA, BGFA
Legend	1986-87	V6, 2.5L	G4
Legend	1988-89	V6, 2.7L	L5
Legend	1990	V6, 2.7L	PL5X
Legend	1991-95	V6, 3.2L	MPYA
3.2TL	1996-98	V6, 3.2L	M5HA
MDX	2001-02	V6, 3.5L	MGHA, BGHA
MDX	2003-04	V6, 3.5L	MDKA
MDX	2005-06	V6, 3.5L	BDKA
MDX	2007-08	V6, 3.7L	BYFA
3.2TL	1999	V6, 3.2L	B7VA
NSX	1991-05	V6, 3.0L	M9RA
RDX	2007-On	L4, 2.3L	BWEA
RL	2005-09	V6, 3.5L	MJBA
RL	2009-On	V6, 3.7L	TBA
RSX	2002-06	L4, 2.0L	MRMA
3.2TL	2000	V6, 3.2L	M7WA
SLX	1996-99	V6, 3.2L	4L30E
TL	2004-08	V6, 3.2L	BDGA
TL Type S	2007-On	V6, 3.5L	BDHA
TSX	2004-08	L4, 2.4L	MCTA
TSX	2009-On	L4, 2.4L	MM7A
Vigor	1992-95	L5, 2.5L	MPWA

ALFA ROMEO

MODEL	YEAR	ENGINE	TRANS
159	2005-On	1.9D, 2.4D, 3.2L	AWF21, AF40, TF-80SC
164	1990-95	V6, 3.0L	ZF4HP18Q
166	2004-06		AW55-50SN
2000	1971-76		ZF3HP12
2000 Milano 164	1976-78		ZF3HP22
2000 Milano 164	1984-93		ZF4HP22
Brera	2007-On		AWF21, AF40, TF-80SC
Spider	2007-On		AWF21, AF40, TF-80SC

AM GENERAL

MODEL	YEAR	ENGINE	TRANS
H2	2002-07	V8, 6.0L	4L65E
H2, SUV, SUT	2007-On	V8, 6.2L	6L80E
H3, X, ALPHA	2005-On	3.5, 3.7. 5.3L	4L60E
H3T	2009-On	3.7L	4L60E
H3T ALPHA	2009-On	5.3L	4L70E
H4	2010-On	3.6L	4L60E
Hummer (H1)	1991-93		3L80E
Hummer (H1)	1993-On		4L80E

AMERICAN MOTORS CORP (AMC)

MODEL	YEAR	ENGINE	TRANS
Alliance	1983-87		MB1
Ambassador	1963-71		BWT35

VEHICLE INDEX

AMERICAN MOTORS CORP (AMC)

MODEL	YEAR	ENGINE	TRANS
Ambassador	1972-74		TF6/904
Ambassador	1972-74		TF8/727
AMC	1957-62		BW8/12
American	1964-68		BWT35
AMX	1978-80		TF6/904
Classic	1963-66		BWT35
Concord	1978-78		TF8/727
Concord	1978-83		TF6/904
Eagle	1980-88		TF6/904
Encore	1983-87		MB1
Gremlin	1970-71		BWT35
Gremlin	1972-78		TF6/904
Hornet	1970-71		BWT35
Hornet	1973-77		TF8/727
Hornet	1973-77		TF6/904
Hudson	1949-56		Hydramatic
Javelin	1968-71		BWT35
Javelin	1972		TF8/727
Javelin	1972-74		TF6/904
Marlin	1965-67		BWT35
Matador	1971		BWT35
Matador	1972-74		TF8/727
Matador	1972-78		TF6/904
Medallion	1988-89		MJ3
Nash (Rambler)	1949-56		Hydramatic
Nash (Rambler)	1955-56		Ultramatic
Pacer	1975-80		TF6/904
Rambler	1956-57		Jetaway
Rambler	1962-71		BWT35
Rebel	1967-70		BWT35
Rogue	1968-69		BWT35
Spirit	1979-83		TF6/904
Studebaker	1951-71		BW8/12

ASTON MARTIN

MODEL	YEAR	ENGINE	TRANS
DB6	1965-92		TBA
DB7 Vantage, Volante	1993-On	V12, 6.0L	ZF5HP30
DBS	2007-On	5.9L	6 spd.
Loganda	1995-On		TF8/727
Loganda	1995-On	3.5L	4L80E
V8 Volante	1995-On		4L80E

AUDI

MODEL	YEAR	ENGINE	TRANS
100	1970-75	L4, 1.9L	003
100	1976-77		088
100	1977-94	L5, 2.3L	087
100	1985-94	L4, 1.9L	089
100	1991	L5, 2.3L	097
100	1992-94		01F (ZF4HP18)
100	1990-94	L5, 2.8L	097
200	1980-83	L5, 2.2L	010
200	1984-91	L5, 2.2L	087
4000	1980-83	L4, 1.6L	087
4000	1980-87	L5, 2.2L	089
4000	1981-83	L4, 1.7L	087
5000	1978-88	L5, 2.2L	087
100 Quattro,C, S	1992-94	V6, 2.8L	ZF4HP18FLA
5000S	1982-87	L5, 2.2L	087
5000S	1987-88	L5, 2.3L	087
80	1973-76		003

VEHICLE INDEX

AUDI

MODEL	YEAR	ENGINE	TRANS
80	1977-81		010
80	1982-87	L4, 2.0L	089
80	1985-91	L5, 2.3L	087
80, Avant	1992-96	L5, 2.3L	097
90	1985-91	L5, 2.3L	087
90	1991-92	2.3, 2.6, 2.8L	097
A2	2006-On	2.0L	09G (TF-60SN)
A3	1997-05		01M
A3	2005-On	2.0, 3.2L	02E (DSG)
A4	1995-On	1.6, 1.8, 1.9L	01N
A4	2005-On	2.0, 3.2, 4.0L	09L (ZF6HP19)
A4	2005-On	2.0T, 3.0TDi, 3.2L	ZF6HP28AF
A4 Multitronic	2003-08	1.8, 2.0, 3.0, 3.2L	CVT (01J)
A4 Quattro	1995-03	1.8L Turbo	ZF5HP19FLA
A4, Avant, Sedan	1995-02	2.4, 2.6, 2.8l	ZF5HP19FL
A5, S5	2008-On	3.2, 4.2L 6 spd.	0B6
A5, S5	2008-On	4.2L	ZF6HP28AF
A5 Quattro	2010-On	2.0L Turbo	
S5	2010-On	3.0L SC	
A6	2005-08	3.2L, 4.2L	09L (ZF6HP19)
A6 Allroad	2001-05	2.7L Turbo	ZF5HP19FLA
A6 Multritronic	2002-04	V6 3.0L	CVT (01J)
A6 Quattro	1995-97	4.2	ZF4HP24A
A6 Quattro	1995-98	exc. 4.2	ZF4HP18FLA
A6 Quattro	1998-04	exc. 4.2	ZF5HP19
A6 Quattro	1998-04	4.2	ZF5HP24A
A6, Avant	1994		097
A6, Avant	1994-97	2.5/2.6/2.8	ZF4HP18FLE
A6, Avant	1995-On	1.9/2.0/2.6	01N
A8	1994-03	2.5, 2.8, 3.7, 4.2L	ZF5HP19FL
A8	1994-99	2.8	ZF4HP18FLE
A8	2004-On	4.2, 6.0L	ZF6HP26A
A8 Quattro	1994-99	4.2	ZF4HP24A
A8 Quattro	1995	2.5/2.8/3.7	ZF5HP19
A8 Quattro	1995	2.8	ZF4HP18FLA
A8 Quattro	1999-On	4.2	ZF5HP24A
Cabriolet	1992-95	V6, 2.8L	097
Cabriolet	1995-On		01N
Coupe	1981-90		089
Coupe	1988-90	L5	087
Coupe	1990-96		097
Coupe	1996		01N
Fox	1973-75	L4, 1.5L	003
Fox	1976-79	L4, 1.6L	087
Q5	2009-On	3.6L	ZF6HP28AF
Q7	2007-On	4.2L	09D (TR-60SN)
Q7	2007-On	3.6L 6 spd. AWD	0AT
R8	2008-On	V8, 4.2L	086 R-tronic
S4	1999-00		ZF5HP19FLA
S4	2001-03	2.7L Turbo	ZF5HP24A
S4/RS4	2004-08	4.2L	09L (ZF6HP19)
S4	2009-On	3.0L SC	TBA
S5	2008-On	4.2L 6 spd.	0B6
S5	2010-On	3.0L SC	TBA
S6	2000-On	5.2L	09E (ZF6HP26)
S6/SR6	2001-04	4.2L	ZF5HP24A
S6/SR6	2004-06	4.2L	ZF5HP19
S8	2001-03	4.2Q	ZF5HP24A
S8	2007-On	5.2L	09E (ZF6HP26)
TT	2003-04	1.8L	09G (TF-60SN)
TT	2004-On	1.8, 2.0, 3.2L	02E (DSG)
TTS	2009-On	2.0L Turbo	S-Tronic Dual Clutch

VEHICLE INDEX

AUDI

MODEL	YEAR	ENGINE	TRANS
V8 Quattro	1989-94		ZF4HP24

BENTLEY

MODEL	YEAR	ENGINE	TRANS
All Models	1952-67		Hydramatic
Arnage	1999-00	V8, 6.8L	ZF5HP30
Azure	1995-03	V8, 6.75L	4L80E
Azure	2006-On	V98, 6.8 Twin Turbo	TBA
Brooklands	1992-97	V8, 6.75L	4L80E
Brooklands	2008-On	V8, 6.8L Twin Turbo	ZF6HP26
Continental	1991-03	V8, 6.75L Turbo	4L80E
Continental Flying Spur	2005-On	W12, 6.0L	ZF6HP26
Continental GT	2003-On	W12, 6.0L	ZF6HP26
Continental GTC	2006-On	W12, 6.0L	ZF6HP26
Continental Supersports	2009-On	W12, 6.0L	ZF6HP32
Corniche	1971-96		TH400
Eight	1984-92	V8, 6.75L	TH400
Mulsanne	1980-92	V8, 6.75L	TH400
T Series	1967-80		TH400
Turbo R	1985-94	V8, 6.75L	TH400
Turbo R	1995-97	V8, 6.75L	4L80E

BMW

MODEL	YEAR	ENGINE	TRANS
128i	2004-On	1.6, 2.0, 3.0L	6L45R
135i	2004-On	3.0L TC	ZF6HP19Z
3 Series (E46)	1997-On		ZF5HP19
318i	1984-85	L4, 1.8L	ZF4HP22
318i	1992-99	L4, 1.9L	4L30E
320i	1992-95	V8, 3.0L	ZF5HP18
320i	2000-03	V8, 3.0L	ZF5HP19
323i	1992-99	L6, 2.5L	4L30E
323i	2000	L6, 2.5L	5L40E
323i, Ci	2000-03		ZF5HP19
325e	1983-88		ZF4HP22
325i	1986-92		ZF4HP22
325i	1992-95	L6, 2.5L	4L30E
325i, Ci, (E46)	2000-04	L6, 2.5L	ZF5HP19
325i, Ci, Xi	2001-05	L6, 2.5L	5L40E
325i, Xi	2006-On	L6, 3.0L	ZF5HP19
325ix	1987-91		ZF4HP22
328i	1996-99	L6, 2.8L	4L30E
328i	2000	L6, 2.8L	5L40E
328i, xi	2007-On	3.0L	6L45R
330i, Ci	1999-03		ZF5HP19
330i, Ci, Xi	2001-05	3.0L	5L40E
335i	2008-On	3.0L Twin Turbo	ZF6HP26
5 Series (E39)	1995-On		ZF5HP24
5 Series (E39)	1997-On		ZF5HP19
520d	2006-On	2.2L TD	ZF6HP19
520i	2004-05	2.2L	ZF6HP19
523i	2006-On	2.5L	ZF6HP19
524td	1983-85		ZF4HP22
525d	2004-On	2.5L TD	ZF6HP19
525i	1988-90		ZF4HP22
525i	1991-95	L6, 2.5L	4L30E
525i	2001-03	2.5, 3.0L	5L40E
525i, xi	2004-07	2.5, 3.0, 4.4, 4.8L	ZF6HP19
528e	1981-87		ZF4HP22
528i	1996-99	L6, 2.8L	4L30E
528i	2000	L6, 2.8L	5L40E
528i	2008-On	3.0L	6 spd. Steptronic

VEHICLE INDEX

BMW

MODEL	YEAR	ENGINE	TRANS
530d, xd	2004-On	3.0L TD	ZF6HP19
530i	1992-95	V8, 3.0L	ZF5HP18
530i	2001-03		5L40E
530i, xi	2004-07		ZF6HP26
530ia, 530it	1990		ZF5HP18
533i	1983-94	3.0L	ZF4HP22
535d	2004-On	3.0L TD	ZF6HP19
535i	1984-93		ZF4HP22
535i, xi	2008-On	3.0L Twin Turbo	ZF6HP19
540i	1992-97	V8, 4.0L	ZF5HP30
540i	1997-03	V8, 4.4L	ZF5HP24
540i	2006-On	4.0L	ZF6HP19
545i	2004-05		ZF6HP26
550i	2006-On	4.8L 6 spd.	ZF6HP26
550i Gran Turismo	2010-On	4.4L Twin Turbo	ZF8HP70
550xi	2006-On	4.8L 6 AWD	ZF6HP26
630i, Ci	2004-On	3.0L	ZF6HP26
633CS	1983-89		ZF4HP22
645Ci, 645Li	2004-On	4.4, 4.8L	ZF6HP26
650i	2006-On	4.8L	ZF6HP26
7 Series (E38)	1997-On		ZF5HP19
7 Series (E38)	1997-On	On	ZF5HP24
730d, Ld	2002-On	3.0L TD	ZF6HP26
730i, Li	2004-On	3.0L	ZF6HP26
733i, 735i, 735Li	1983-92		ZF4HP22
740i	1992-95	V8, 4.0L, 4.4L	ZF5HP30
740i	1996-01	V8, 4.4L	ZF5HP24
740i, Li	2002-On	4.0L	ZF6HP26
745d	2002-On	4.4L D	ZF6HP26
745i, 745Li	2002-05	V8, 4.4L	ZF6HP26
750i, Li	2006-On	4.8L	ZF6HP26
750iL	1988-94	V12, 5.0L	ZF4HP24
750iL	1995-01	V12, 5.4L	ZF5HP30
750Li	2009-On	V8, 4.4L Twin Turbo	ZF6HP26
760i, 760Li	2004-08	V12, 6.0L	ZF6HP32
760i, 760Li	2009-On	V12, 6.0L	ZF8HP70
8 Series (E31)	1995-On	On	ZF5HP24
840Ci	1992-96	V8, 4.0L	ZF5HP30
840Ci	1996-98	V8, 4.4L	ZF5HP24
840Cia (E31)	1993-99		ZF5HP30
850i	1994-97	V12, 5.4L	ZF5HP30
850i, 850Ci	1988-94	V12, 5.0L	ZF4HP24
All 3 speed	1966-76		ZF3HP12
All 3 speed	1976-83		ZF3HP22
ALL EXC. BELOW	1984-94		ZF4HP22
M3	1993-99	L6, 3.2L	ZF5HP18 (A5S 310Z)
M3	2008-On	V8, 4.0L	7 spd. DCT
M5	2005-On	V10, 5.0L	7 spd. SMG
M6	2005-On	V10, 5.0L	7 spd. SMG
Mini Clubman	2008-On	1.6L	6F21WA (TF-60SN)
Mini Cooper	2002-On	1.6L	TF-60SN
Mini Cooper	2002-On	1.6L CVT	CFT-23
Mini Crossman/S	2010-On	1.6L	6F21WA (TF-60SN)
X3	2004-06	2.5, 3.0L	5L40E
X3	2007-On	2.5, 3.0L	6L45R
X35i	2008-On		TBA
X5	1998-03	4.4, 4.6L	ZF5HP24
X5	2000-06	3.0L	5L40E
X5	2006-08	3.0L	ZF6HP19
X5	2004-08	4.4, 4.8L	ZF6HP26A
X5 35d	2009-On	3.0L T/C Diesel	ZF6HP19
X6	2008-On	3.0L	ZF6HP19
X6	2008-On	4.4L	ZF6HP26

VEHICLE INDEX

BMW

MODEL	YEAR	ENGINE	TRANS
X6 Hybrid	2009-On		RWD 2-Mode Hybrid
Z3	1996-00	L4, 1.9L, 2.8L	4L30E
Z3	2001-02	2.5i, 3.0iL	5L40E
Z4	2001-03	2.5, 3.0L	ZF5HP19
Z4	2003-06	2.5, 3.0L	5L40E
Z4	2007-On	3.0L	ZF6HP19Z
Z8 Alpina	2002-03	V8, 4.8L	ZF5HP24

BRISTOL

MODEL	YEAR	ENGINE	TRANS
ALL	1967-On		A727

BUICK

MODEL	YEAR	ENGINE	TRANS
All w/2 speed	1965-67		ST300
Apollo	1973-80		TH350
Century	1973-77		TH400
Century	1978-81		TH200C
Century	1982-94		TH125C
Century	1984-93		TH440T4
Century	1994-99		4T60E
Century	2000-04		4T65E
Electra	1974-76		TH375
Electra	1974-81		TH400
Electra	1976-83		TH350C
Electra	1977-85		TH200C
Electra	1980-83		TH250
Electra	1981-84		TH200-4R
Electra	1985-89		TH440T4
Enclave	2008-On	3.6L	6T75
Estate Wagon	1981-90		TH200-4R
LaCrosse/Allure	2005-On	3.6, 3.8, 5.3L	4T65E
LeSabre	1974-76		TH375
LeSabre	1974-81		TH400
LeSabre	1976-83		TH350C
LeSabre	1977-79		TH200C
LeSabre	1984		TH700R4
LeSabre	1986-91		TH440T4
LeSabre	1992-97		4T60E
LeSabre	1998-05		4T65E
Lucerne	2006-On	4.6L	4T80E
Lucerne	2006-On	3.8, 3.9L	4T65E
Opel	1969-75		TH180
Opel	1976-79		TH200
Park Avenue	1980-83		TH350C
Park Avenue	1980-83		TH250
Park Avenue	1985-90		TH440T4
Park Avenue	1991-96		4T60E
Park Avenue	1997-04	V6 3.8L	4T65E
Rainier	2004-On	4.2, 5.3L	4L60E
Reatta	1989-90		TH440T4
Reatta	1991-92		4T60E
Regal	1969-81		TH350
Regal	1969-81		TH400
Regal	1982-83		TH350C
Regal	1982-87		TH200C
Regal	1983-87		TH200-4R
Regal	1988-93		TH440T4
Regal	To 69		ST300
Regal GS	1998-04		4T65E
Regal LS	1994-97		4T60E
Rendezvous	2002-On	3.4, 3.5, 3.6L	4T65E

VEHICLE INDEX

BUICK

MODEL	YEAR	ENGINE	TRANS
Riviera	1965-78		TH400
Riviera	1977		TH350
Riviera	1977-78		TH200
Riviera	1979-81		TH325
Riviera	1982-85		TH325-4L
Riviera	1986-90		TH440T4
Riviera	1991-96		4T60E
Riviera	1997-99		4T65E
Roadmaster	1991-93		4L60
Roadmaster	1994-96		4L60E
Skyhawk	1974-80		TH350
Skyhawk	1976-77		TH200
Skyhawk	1982-89		TH125C
Skyhawk	To 69		ST300
Skylark	1969-79		TH350
Skylark	1980-82		TH125
Skylark	1983-95	2.3L	TH125C
Skylark	1994-98	3.1L	4T60E
Skylark	1997	2.4L	4T40E
Somerset	1985-89		TH125C
Special	1965-69		ST300
Special	1967-72		TH400
Special	1969-72		TH350
Terraza	2005-On	3.5, 3.9L	4T65E

CADILLAC

MODEL	YEAR	ENGINE	TRANS
Allante	1987-92		TH440T4
Allante	1993		4T80E
BLS (Non US)	2006-On	1.9, 2.0, 2.8L	AWF21, AF40, TF-80SC
BRX	2009-On	3.6L	TBA
Catera	1997-01		4L30E
Cimmaron	1982-88		TH125C
Concours DeVille	1994-04		4T80E
CTS	2002-06	2.6, 2.8, 3.2, 3.6L	5L40E
CTS	2007-On	3.6L	6L50
CTS Coupe	2010-On	3.6L	6L50
CTS Sports Wagon	2010-On		TBA
CTS-V	2008-On	6.2L SC	6L90E
DeVille	1973-84		TH400
DeVille	1985-90		TH440T4
DeVille	1991-95		4T60
DeVille	1994-05	V8, 4.9L	4T80E
DTS, Limo, Hearse	2006-On	V8, 4.6L	4T80E
Eldorado	1967-78		TH425
Eldorado	1979-81		TH325
Eldorado	1982-85		TH325-4L
Eldorado	1986-90		TH440T4
Eldorado	1991-92		4T60E
Eldorado	1993-On		4T80E
Escalade Hybrid	2009-On	V8, 6.0L	RWD 2-Mode Hybrid
Escalade/EXT/ESV	1999-On	V8, 5.3, 5.7, 6.0L	4L60E/4L65E
Escalade/EXT/ESV	2007-On	V8, 6.2L	6L80E
Fleetwood	1974-84		TH400
Fleetwood	1980-81		TH200C
Fleetwood	1981-84		TH200-4R
Fleetwood	1982		TH350C
Fleetwood	1985-89		TH440T4
Fleetwood	1990-92		TH700R4
Fleetwood	1991-93		4T60E
Fleetwood	1993-96		4L60E
Livery (Hearse, Limo)	1997-01		4T80E
Seville	1976-79		TH400

VEHICLE INDEX

CADILLAC

MODEL	YEAR	ENGINE	TRANS
Seville	1980-81		TH325
Seville	1982-85		TH325-4L
Seville	1986-90		TH440T4
Seville	1991-95		4T60E
Seville STS	1992-93		4T60E
Seville STS	1994-04		4T80E
SRX	2004-06	3.6, 4.6L	5L40E
SRX	2007-On	3.6, 4.6L	6L50
SRX	2010-On	2.8, 3.6L, 1.9 Diesel FWD	TBA
STS	2005-06	4.6L	5L50E
STS	2005-06	3.6L	5L40E
STS	2007-On	3.6, 4.6L	6L50
STS-V	2006-On	4.4L SC	6L80
XLR	2004-06	4.6L	5L50E
XLR, V	2006-On	4.4, 4.6L	6L80E

CHECKER

MODEL	YEAR	ENGINE	TRANS
Checker	1959-74		BW8/12
Checker	1975-On		TH400

CHEVROLET

MODEL	YEAR	ENGINE	TRANS
Acadia	2007-On	3.6L	6T75
Astro Van	1989-92		TH700R4
Astro Van	1993-05		4L60E
Avalanche	2007-On	V8, 5.3L	4L70E
Avalanche 1500	2001-07	V8 (5.3L)	4L60E
Avalanche 2500	2001-On	V8 (8.1L)	4L80/85E
Aveo, Aveo 5	2004-On	L4, 1.6L	AW81-40LE
Beretta	1987-96	2.2L	TH125C
Beretta	1995-96	3.1L	4T60E
Camaro	1967-74		TH400
Camaro	1968-81		TH350C
Camaro	1980-83		TH200C
Camaro	1983-93		TH700R4
Camaro	1994-02		4L60E
Camaro	2010-On	3.6L	6L50
Camaro	2010-On	6.2L	6L80/85E
Caprice	1974-76		TH375/TH400
Caprice	1974-80		TH350
Caprice	1978-79		TH200
Caprice	1980-84		TH350C
Caprice	1980-87		TH200C
Caprice	1981-89		TH200-4R
Caprice	1982-93		TH700R4
Caprice	1994-96		4L60E
Cavalier	1982-01		TH125C
Cavalier	1995-05		4T40E
Celebrity	1982-90	2.5L	TH125C
Celebrity	1984-90	2.8L	TH440T4
Chevelle	1965-72		Alum PG
Chevelle	1967-75		TH400
Chevelle	1968-81		TH350C
Chevelle	1973-75		TH250
Chevelle	1977-81		TH200C
Chevelle	1980-81		TH250C
Chevette	1976-84		TH200C
Chevette	1977-87		TH180
Citation	1980-85		TH125C
CK Blazer	1969-82		TH350
CK Blazer	1978-79		TH400

VEHICLE INDEX

CHEVROLET

MODEL	YEAR	ENGINE	TRANS
CK Blazer	1982-92		TH700R4
CK Blazer	1991-03		4L80E
CK Blazer	1993-05		4L60E
Cobalt	2005-On	2.2, 2.4L	4T45E
Colorado	2004-On	2.8, 2.9, 3.5, 3.7L	4L60E
Corsica	1987-96		TH125C
Corsica	1995-96		4T60E
Corvair	1965-69		Alum PG
Corvette	1965-67		Alum PG
Corvette	1968-77		TH400
Corvette	1976-81		TH350C
Corvette	1982-93		TH700
Corvette	1994-04	5.7L	4L60E
Corvette	2005	6.0L	4L65E
Corvette	2006-On	6.2, 7.0L	6L80E/85E
Cruze	2011-On	1.4 TC, 1.6, 1.8L	6T40
El Camino	1982-87		TH200C
Epica	2000-07		ZF4HP16
Epica	08-On		6T40
Equinox	2005-09	3.4L	AF33-5
Equinox	2010-On	2.4L Direct Inj.	6T40
Equinox Sport	2008-On	3.6L	6T70
Express Van	1996-On		4L60E
HHR	2006-On	2.0, 2.2, 2.4L	4T45E
HHR SS	2008-On	2.0L TC	TBA
Impala	1974-76		TH375/TH400
Impala	1974-81		TH350/TH350C
Impala	1978-79		TH200C
Impala	1982-93		TH700R4
Impala SS	1994-97	5.7L	4L60E
Impala, SS	2000-07	3.4, 3.5, 3.8, 3.9, 5.3	4T65E
Lumina Car	1990-92	3.1, 3.4L	TH440T4
Lumina Car	1990-94	2.5L	TH125C
Lumina Car	1993-00	3.1, 3.4L	4T60E
Lumina Car	1997-01	3.4, 3.8, 3.8 SC	4T65E
Lumina Car	2000-01	3.1L	4T65E
Lumina Van	1990-95	3.1L	TH125C
Lumina Van	1992-96	3.4, 3.8L	4T60E
Luv Truck	1976-81		TH200C
Malibu	1982-84		TH350C
Malibu	1982-87		TH200C
Malibu	1984-87		TH200-4R
Malibu	1997	2.4L	4T40E
Malibu	1997	3.1L	4T60E
Malibu	1998-03	2.4, 3.1L	4T40E
Malibu	2004-On	3.5L	4T45E
Malibu	2004-Mid 08	2.4, 3.1L	4T45E
Malibu	Mid 08-On	2.4L	6T40
Malibu SS, Maxx SS	2006-07	3.9L	4T65E
Malibu, LT, LTZ	2008-On	3.6L	6T70
Malibu Hybrid	2008-On	2.4L	4T45E
Malibu, Malibu Maxx	2004-07	2.2, 3.5L	4T45E
Monte Carlo	1965-72		Alum PG
Monte Carlo	1973-75		TH250
Monte Carlo	1980-81		TH250C
Monte Carlo	1982-84		TH350C
Monte Carlo	1982-87		TH200C
Monte Carlo	1984-88		TH200-4R
Monte Carlo	1990-92		TH440T4
Monte Carlo	1990-94		TH125C
Monte Carlo	1995-99	3.1L	4T60E
Monte Carlo	1997-05	3.4L, 3.8, 3.8L SC	4T65E
Monte Carlo	2006-On	3.5, 3.9, 5.3L	4T65E

VEHICLE INDEX

CHEVROLET

MODEL	YEAR	ENGINE	TRANS
Monza	1975-77		TH250
Monza	1976-80		TH200
Monza	1978-80		TH350
Nova	1965-73		Alum PG
Nova	1968-70		TH400
Nova	1968-79		TH350
Nova	1974-75		TH250
Nova	1976-77		TH200
Nova (import)	1985-88	Carb	MX1
Nova (import)	To 88	EFI	MS7
Optra	2000-On		ZF4HP16
Prizm	1985-02		MS7
Prizm	1985-02		MX1
S10 Truck	1982		TH200C
S10 Truck	1983-92	2.8L	TH700R4
S10 Truck	1993-On	2.5, 4.3L	4L60E
Silverado 1500	1993-On	4.3, 4.8, 5.0, 5.3, 5.7L	4L60E
Silverado 1500HD	1993-On	5.7, 6.0, 6,5L	4L80E
Silverado 1500SS	2004-06	6.0L	4L65E/4L70E
Silverado 1500SS	2006-On	6.0, 6.2L	6L80E
Silverado 2500	1993-On	5.7, 6.0, 6.5L	4L80E
Silverado 2500/HD	1999-06	6.6 Diesel, 8.1L 5 Sp	1000
Silverado 2500/HD	2006-On	6.6 Diesel, 8.1L 6 Sp	1000
Silverado 2500/HD, 3500	2006-On	6.0, 6.2L	6L80E
Silverado 3500	1995-On	6.0, 6.5, 6.6 Diesel, 7.4L	4L80E
Silverado 3500/HD	1999-06	6.6 Diesel, 8.1L 5 Sp	1000
Silverado 3500/HD	2006-On	6.6 Diesel, 8.1L 6 Sp	1000
Spectrum	1985-89		F3A
Sprint	1985-01		MX17
SSR	2003-On	4.2, 5.3, 6.0L	4L60E/4L65E
Suburban	2008-On	6.0L	6L90E
Suburban 1500	1987-92		TH700R4
Suburban 1500	1993-06		4L60E
Suburban 1500	2007-On	5.3, 6.0L	6L80E
Suburban HD	2008-On	6.0L	6L90E
Suburban 2500	1987-90		TH400
Suburban 2500	1991-On	6.0, 6.5 Diesel, 7.4L	4L80E/4L85E
Suburban 2500	2002-On	8.1L	1000
Tahoe	2007-On	6.2L	6L80E
Tahoe 1500	1993-07	4.8, 5.0, 5.3, 5.7L	4L60E
Tahoe 2500	1992-06	6.0, 6.5 Diesel, 6.4L	4L80E
Tahoe 2500	2004-06	8.1	4L85E
Tahoe 2500	2007-On	6.0 (Iron Block)	4L80E
Tahoe 2500	2007-On	6.0 (Alum Block)	4L70E
Tahoe Hybrid	2008-On	6.0L	RWD 2-Mode Hybrid
Tiltmaster	1988-On		JR403E
TrailBlazer	1999-06	4.2, 5.3L	4L60E
TrailBlazer SS	2006-On	6.0L	4L70E
Traverse	2008-On	V6, 3.6L	6T75
Truck (C/K series)	1966-90		TH400
Truck (C/K series)	1969-86		TH350C
Truck (C/K series)	1982-92		TH700
Truck (C/K series)	1991-On		4L80E
Truck (C/K series)	1993-On		4L60E
Uplander	2005-On	3.5, 3.9L	4T65E
Van (full size)	1969-86		TH350C
Van (full size)	1975-90		TH400
Van (full size)	1983-92		TH700R4
Van (full size) 1500	1993-On		4L60E
Van (full size) 2500/3500	1995-07	4.8, 5.7, 6.0, 7.4, 8.1, 6.5D	4L80E
Van (full size) 2500/3500	1995-On	4.3, 4.8, 5.3, 5.7L	4L60E
Van (full size) 2500/3500	2006-On	6.0, 6.6L Diesel	4L85E
Vega	1971-73		Alum PG

VEHICLE INDEX

CHEVROLET

MODEL	YEAR	ENGINE	TRANS
Vega	1972-73		TH350
Vega	1973-77		TH250
Venture (van)	1997-98	3.3, 3.4L	4T60E
Venture (van)	1999-05	3.4L	4T65E

CHRYSLER

MODEL	YEAR	ENGINE	TRANS
300	1979		TF8/727
300	2005-07	2.7, 3.5L	A606
300C	2005-On	3.5, 4.7, 6.1L	722.6
300M	1999-04	3.5L	A606
Aspen	2007-On	4.7, 5.7L	545RFE
Aspen Hybrid	2009-On	5.7L	RWD 2-Mode Hybrid
Cirrus	1995-00	2.4, 3.5L	A604 (41TE)
Concorde	1993-On	2.7, 3.2, 3.3, 3.5L	A606
Conquest	1984-89		4N71B
Cordoba	1975-80		TF8/727
Cordoba	1975-83		TF6/904
Crossfire	2004-On	3.2, 3.2L, SC	722.6
E class	1983-84		A413
Executive	1983-85		A470
Fifth Avenue	1982-89		TF6/904
Fifth Avenue	1983		TF8/727
Fifth Avenue	1993-On	3.3L	A604
Imperial	1967-75		TF8/727
Imperial	1981-83		TF6/904
Imperial	1991-92		A604
LeBaron	1977-81		TF6/904
LeBaron	1978-81		TF8/727
LeBaron	1982-85		A470
LeBaron	1982-92		A413
LeBaron	1995	3.0L	A604 (41TE)
LHS	1993-01	3.5L	A606
New Yorker	1981-82		TF6/904
New Yorker	1983-87		A413
New Yorker	1983-96		A470
New Yorker	1989-93		A604
New Yorker	1994-96	3.5L	A606
Newport	1981-88		TF6/904
Pacifica	2004-07	3.5, 3.8L	A604 (41TE)
Pacifica	2004-06	3.5L AWD	A604 (41AE)
Pacifica	2007-08	4.0L	62TE
Prowler	1997-02	3.5L	A606
PT Cruiser	2000	2.4L	A413
PT Cruiser	2001-03	2.2, 2.4L	A604 (41TE)
PT Cruiser	2004-On	2.2, 2.4L	A604 (40TE)
PT Cruiser	2004-On	2.4L Turbo	A604 (41TE)
Sebring	1996-05	2.0, 2.4DOHC, 2.4T, 2.5, 2.7L	A604 (41TE)
Sebring	2001-06	2.4L SOHC	F4A42-2
Sebring	2001-06	3.0L	F4A51-2
Sebring	2007-On	2.4, 2.7L	41TES/A604
Sebring	2007-On	3.5L	62TE
Town & Country	1977-88		TF6/904
Town & Country	1989-07	3.3, 3.8L	A604 (41TE)
Town & Country	1997-07	3.8L AWD	A604 (41AE)
Town & Country	2008-On	3.8, 4.0L	62TE

CITROEN

MODEL	YEAR	ENGINE	TRANS
BX	1987-93	1.6, 1.9L	ZF4HP14Q
C4	2004-On	1.4, 1.6, 2.0L	AWF21, AF40, TF-80SC
C5	2004-On	1.6, 1.7, 2.0, 2.2, 2.9L	AWF21, AF40, TF-80SC

VEHICLE INDEX

CITROEN

MODEL	YEAR	ENGINE	TRANS
C6	2005-On	2.2, 2.7, 3.0L	AWF21, AF40, TF-80SC
X1	1995-05		ZF4HP20
Xanita	1992-98	1.8, 2.0L	ZF4HP14Q
Xanita	1997-01	3.0L	ZF4HP20
XM	1989-98	2.0,3.0L	ZF4HP18Q
XM	1997-01	3.0L	ZF4HP20
Xsara	1997-04		ZF4HP14
Y4	1995-05		ZF4HP20
ZX	1992-98	1.8L	ZF4HP14Q

DAEWOO

MODEL	YEAR	ENGINE	TRANS
1.5i	1994-95		TH125C
Cielo	1994-97	1.5L	3T40E (TH125C)
Cielo	1994-97	1.5L	4T60E
Espero	1995-97		AW50-40LE
Kalos	2003-On	1.6L	AW81-40LE
Korando	1998-05		BTR M74LE
Lacetti	2004-On	1.4, 1.6, 1.8L	80-40LS
Lanos	1997-01		4T40E
Lanos	2001-05		ZF4HP16
Leganza	1996-02	1.8, 2.0L	ZF4HP14Q
Legonzia	1999-03	2.2L	AW50-40LE
Magnus	2000-On		ZF4HP16
Musoo	1998-05	Late	BTR M74
Musoo	Up to 98	Early	W4A-040
Nexia	1994-97	1.5L	4T40E
Nubira	1996-99	1.5, 1.8L	ZF4HP14Q
Nubira	1997-03	2.0L	4T40E
Prince	1994-On		A44DL
Rezzo	2000-On		ZF4HP16
Tacuma	2000-05	1.6, 2.0L	ZF4HP16

DAIHATSU

MODEL	YEAR	ENGINE	TRANS
3.6L LFi	1989-On	3.6L	ZF4HP22
Applause	1990-On		A140
Be-go	2006-On	1.5L	A4LB-1
Charade	1988-92		MX17
Charade	1993-05		AW60-40LE
Charmant	1978-82		A40
Double Six	1972-73	5.3L	BW12
Double Six	1977-92	5.3L	TH400
Limo	1968-70	4.2L	BW8
Limo	1970-79	4.2L	BW12
Limo	1979-92	4.2L	TH400
Mira	1989-On		Mini
Rocky	1989-92		MX17
Sirion	2001-On	1.3L	A4LB-1
Sovereign	1966-69	4.2L	BW8
Sovereign	1969-73	2.8L	BW12
Sovereign	1975-86	3.4, 4.2L	BW65
Taruna	2002-On	1.3L	A4LB-1
Terios	1997-00	1.3L	A4LB-1
Terios	2000-On	1.5L	FN8-J48
V8	1962-69	2.5L	BW35
YRV	2001-On		A140

DARIO

MODEL	YEAR	ENGINE	TRANS
Terios	2002-On	1.3L	A4LB-1

VEHICLE INDEX

DELOREAN

MODEL	YEAR	ENGINE	TRANS
Delorean	1981-82		TH180
Delorean	1981-86		4141

DODGE

MODEL	YEAR	ENGINE	TRANS
2000GT	1989-94		KM175-5
2000GT	1992-94		W4A32-1
24	1981-82		A404
400	1982-83		A413
600	1983-88		A413
Aries K car	1981-89		A413
Aspen	1976-81		TF6/904
Aspen	1977-80		TF8/727
Avenger	1995-00	2.0, 2.5L	A604 (41TE)
Avenger R/T	2008-On	3.5L	62TE
Avenger, SE, SXT	2008-On	2.4, 2.7L	41TES/A604
Caliber	2007-On	2.4L	JF011E
Caravan/Grand Caravan	1984-02	2.4L	A413
Caravan/Grand Caravan	1995-00	3.0L	A670
Caravan/Grand Caravan	1995-03	2.4, 3.0, 3.3, 3.8L	A604 (41TE)
Caravan/Grand Caravan	1997-05	3.3, 3.8L AWD	A604 (41AE)
Caravan/Grand Caravan	2004-07	2.4L	A604 (40TE)
Caravan/Grand Caravan	2004-07	3.3, 3.8L	A604 (41TE)
Caravan/Grand Caravan	2008-On	3.3L	A604 (41TE)
Caravan/Grand Caravan	2008-On	3.8, 4.0L	62TE
Challenger	1970-72		TF6/904
Challenger	1970-74		TF8/727
Challenger	1978-83		TF6/904
Challenger SE	2008-On	3.5L	42RLE
Challenger R/T	2008-On	5.7L 5 spd.	722.6
Challenger SRT8	2008-On	6.1L 5 spd.	722.6
Charger	1966-78		TF6/904
Charger	1966-78		TF8/727
Charger	2005-On	3.5, 5.7, 6.1L	722.6
Charger	2006-On	2.7L	42RLE
Colt	1978-81	L4, 1.5L	KM170
Colt	1981-84	L4, 1.5L	KM170-1
Colt	1989-90	L4, 1.6L	KM176-5
Colt	1989-92	L4, 1.5L	F3A21-2
Colt	1991-92	L4, 1.5L	KM176-5
Colt	1992-94	L4, 1.8L AWD	W4A32-1
Colt	1992-94	L4, 1.8L	F4A22-2
Colt	1993-94	L4, 1.5L	KM170-2
Colt 100	1989	L4, 1.5L	F3A21-2
Colt 100	1990	L4, 1.6L	KM176-5
Colt 200	1989-90	L4, 1.6L	KM176-5
Colt 200	1989-94	L4, 1.5L	F3A21-2
Colt LA	1985-88	L4, 1.5L	KM171-1
Colt LA	1985-88	L4, 1.6L	KM171-2
Colt LC	1990	L4, 1.6L	KM176-5
Colt Summit	1989-90	L4, 1.5L	KM171-5
Colt Summit	1991-94	L4, 1.5L	F4A21-2
Colt Summit	1991-96	L4, 1.5L	F3A21-2
Colt Summit	1993-96	L4, 1.8L	F4A22-2
Colt Summit LC	1989-90	L4, 1.6L	KM176-5
Colt Summit Wagon	1992-96	L4, 2.4L	F4A23-2
Colt Summit Wagon	1992-96	L4, 2.4L AWD	W4A32-1
Colt Summit Wagon	1995-96	L4, 1.8L	F4A22-2
Colt Vista Wagon	1986-88	L4, 2.0L	KM172-0
Colt Vista Wagon	1987-88	L4, 1.5L	KM171-1
Colt Vista Wagon	1989-91	L4, 2.0L	KM172-5
Colt Vista Wagon	1989-92	L4, 1.5L	KM171-5

VEHICLE INDEX

DODGE

MODEL	YEAR	ENGINE	TRANS
Colt Vista Wagon	1992-93	L4, 1.8L	W4A32-1
Colt Vista Wagon	1992-94	L4, 2.4L	W4A32-1
Colt Vista Wagon	1992-94	L4, 1.8L	F4A22-2
Colt Vista Wagon	1992-94	L4, 2.4L	F4A23-2
Colt Wagon	1987-88	L4, 1.5L	KM171-1
Colt Wagon	1989-90	L4, 1.5L	KM171-5
Conquest	1984-89	L4, 2.6L	E4N71B
Coronet	1974-76		TF6/904
Coronet	1974-76		TF8/727
D50 pickup	1979-On		TF6/904
D50 pickup	1990-94	L4, 3.9L	A500
D50 pickup 2wd	1987-89	L4, 2.4L	AW372 (A44D)
D50 pickup 4wd	1987-89	V6 3.0L	KM148
Dakota	1987-88		TF6/904
Dakota	1988-On	V6, 3.9, 5.2L	42RE
Dakota	1999-On	V8, 5.9L	46RE
Dakota	1999-On	V8, 4.7L	45RFE
Dakota	2004-On	3.7L	42RLE
Dart	1966-76		TF6/904
Dart	1969-76		TF8/727
Daytona	1984-91		A413
Daytona	1986		A470
Daytona	1989-91		A604
Diplomat	1977-87		TF6/904
Diplomat	1978-89		TF8/727
Diplomat	1989		A999
Durango	1988-00	3.9, 5.2L	A500
Durango	1998-03	V8, 5.9L	46RE
Durango	1999-02	V8, 4.7L	45RFE
Durango	2003-On	V8, 4.7, 5.7L	545RFE
Durango	2004-On	3.7L	42RLE
Durango Hybrid	2009-On	5.7L	RWD 2-Mode Hybrid
Dynasty	1988		A670
Dynasty	1989-91		A413
Dynasty	1989-91		A604
EV	2010-On	Electric	TBA
Hornet	2011-On	Electric	TBA
Intrepid	1993-04	2.7, 3.2, 3.3, 3.5L	A606
Journey	2009-On	2.4L	41TES
Journey	2009-On	3.5L	62TE
Lancer	1985-89		A413
Lancer	1986		A470
Magnum	1978-79		TF8/727
Magnum	1978-79		TF6/904
Magnum	2005-On	2.7L	42RLE
Magnum	2005-On	3.5, 5.7, 6.1L	722.6
Mirada	1980		TF8/727
Mirada	1980-83		TF6/904
Monaco	1974-80		TF8/727
Monaco	1974-83		TF6/904
Monaco	1988-89	L4, 2.5L	AR4
Monaco	1988-92	V6, 3.0L	ZF4HP18FL
Neon	1995-01		A413
Neon	2002-03	2.0L	A604 (41TE)
Neon	2004-05	2.0L	A604 (40TE)
Nitro	2007-On	3.7L	42RLE
Nitro	2007-On	4.0L	722.6
Omni	1978-83		A404
Omni	1981-90		A413
Pickup	1965-91		TF6/904
Pickup	1969-91		TF8/727
Pickup	1988-On		A500
Pickup	1990-On		A518

VEHICLE INDEX

DODGE

MODEL	YEAR	ENGINE	TRANS
Raider	1987-89		AW372
Raider pickup 2wd	1987-89	2.4, 3.0L	AW372
Raider pickup 4wd	1987-89	3.0L	KM148
Ram 1500	1988-02	3.9L	A500
Ram 1500	2002	3.7, 4.7L	45RFE
Ram 1500	2003-On	3.7, 4.7, 5.7L	545RFE
Ram 1500-3500	1990-03	V8, 5.2, 5.9L	46RE
Ram 2500-3500	1995-02	V10, 8.0L, 5.9 Diesel	47RE
Ram 2500-3500	2003-On	All	48RE (A618)
Ram 50	1987-89		KM148
Ram Charger	1974-88		TF8/727
Ram Charger	1982-88		A999
Ram Charger	1988-91		A500
Ram Charger	1990-91		A518
RM SRT 10	2005-On	V10, 6.3L	48RE (A618)
Royal Monaco	1977		TF8/727
Royal Monaco	1977		TF6/904
Shadow	1987-91		A413
Spirit	1989-95	2.5L	A413
Spirit	1990-95	3.0L	A604
Sprinter Van, 2500-3500	2004-On	2.7 Diesel 4 Sp	MT643 (Allison)
Sprinter Van, 2500-3500	2004-On	2.7 Diesel 5 Sp	722.6
St Regis	1979-81		TF8/727
St Regis	1979-81		TF6/904
Stealth	1991-97	V6, 3.0L	F4A33-1
Stratus	1995-03	2.0, 2.4 DOHC, 2.5, 2.7L	A604 (41TE)
Stratus	2001-06	2.4 SOHC	F4A42-2
Stratus R/T	2001-06	3.0L	F4A51-2
Stratus	2004-06	2.0, 2.4 DOHC	A604 (40TE)
Stratus	2004-06	2.4 Turbo, 2.7L	A604 (41TE)
Trailcluster	1974-81		A727
Van	1969-01		TF8/727
Van	1981-03	3.9L	TF6/904
Van	1988-96		A500
Van	1990-On	5.2, 5.9L	A518
Viper	1993-On		A618

EAGLE

MODEL	YEAR	ENGINE	TRANS
2000 GTX	1989-93	L4, 2.0L	F4A22-2
2000 GTX AWD	1992-94	L4, 2.0L	W4A32-1
Medallion	1988-05	L4, 2.2L	MB1
Premier	1988-89	L4, 2.5L	AR4
Premier	1988-92	L6, 3.0L	ZF4HP18FL
Premier	1990-03		A604
Summit	1989-90	1.6L	KM176-5
Summit	1989-97	1.5L	KM171-5
Summit	1991-92	1.5L	KM176-5
Summit	1991-92	2.4L	W4A32
Summit	1993-97	1.8L	KM175-5
Summit Wagon	1995-97	1.8L	F4A22-2
Summit Wagon	1995-97	2.4L	F4A23-2
Summit Wagon	1995-97	2.4L AWD	W4A32-1
Talon	1990-94	1.8, 2.0L Non Turbo	F4A22-2
Talon	1991-98	2.0L Turbo	F4A33-1
Talon	1995-98	2.0, 2.5L Non Turbo	A604
Talon AWD	1992-98	2.0L Turbo AWD	W4A33-1
Vision	1993-On		A606
Vista	1987-88	L4, 1.5L	KM171-1
Vista	1987-88	L4, 1.6L	KM171-2
Vista	1989	L4, 1.5L	F3A21-2
Vista	1989	L4, 1.6L	KM176-5

VEHICLE INDEX

EAGLE

MODEL	YEAR	ENGINE	TRANS
Vista Wagon	1991	L4, 2.0L	F3A22-2
Vista Wagon	1992-94	L4, 2.4L	F4A23-2
Vista Wagon	1992-94	L4, 1.8L	F4A22-2
Vista Wagon AWD	1992-93	L4, 1.8L	W4A32-1
Vista Wagon AWD	1992-93	L4, 2.4L	W4A32-1

FERRARI

MODEL	YEAR	ENGINE	TRANS
456M			TBA
GT400	1986-88		TH400
California	2008-On	V8, 4.3L	7spd. Dual Clutch

FIAT

MODEL	YEAR	ENGINE	TRANS
124	1971-83		TH180
130	1972-77		BW8/12
131, Mirafiori	1975-81	1.6L	TH180
132, 132GLS	1973-82	1.6, 2.0L	TH180
2000/2500	1987-89	2.0, 2.5L	ZF4HP18Q
2000E	1974		C4
2000E	1975-81		C3
2300, 2800 Series	1966-71		BW35
Alpha	1998-On	2.5, 3.0L	ZF4HP20
Argenta	1981-85		TH180
Brava	1995-00		AW60-40
Brava, Spider	1975-81		TH180
Chroma	1989-96	1.9, 2.0L	ZF4HP18Q
Chroma	2005-On	1.8, 1.9, 2.2,2 .4L	AWF21, AF40, TF-80SC
Lancia Thesis	2002-On	V6 3.0L	AW55-50SN
Marea	1996-On		AW50-40
Panda Selecta	1991-On		ECVT
Punto Selecta	1993-98		ECVT
Punto Speedgear	1999-On	1.2L, 16V	ECVT
Regata	1983-90		010
Spider 2000	1981-82		TH180
Strada	1979-84		010
Tempra	1990-96		ECVT
Tempra	1991-96	2.0L	AW50-40
Thema	1989-96	2.0, 3.0L	ZF4HP18Q
Thema	1993-98	2.0, 3.0L	ZF4HP18QE
Tivo Selecta	1989-95		ECVT
Uno Selecta	1987-95	1.1L	CTX (CVT)
X1/9	1976-82		010

FORD

MODEL	YEAR	ENGINE	TRANS
2000E	1974		C4
2000E	1975-81		C3
Aerostar	1982-86		C5
Aerostar	1985-95		A4LD
Aerostar	1996	4.0L	4R55E
Aerostar	1996-97	3.0L	4R44E
Aerostar	1997-On	4.0L	5R55E
Aspire	1994-97		F3A
Bronco	1973-77		C4
Bronco	1978-91		C6
Bronco	1985-93		AOD
Bronco	1994-98		E4OD
Bronco II	1984-84		C5
C-Max	2003-06	1.6L Diesel	CFT-23
Bronco II	1984-90		A4LD
Contour	1995-On	2.0, 2.5L	CD4E

VEHICLE INDEX

FORD

MODEL	YEAR	ENGINE	TRANS
Corsair	1963-73		BW35
Cortina	1968-73		BW35
Cortina	1974		C4
Cortina	1974-87		C3
Courier	1972-75		BW35
Courier	1973-82		L3N71B
Crown Victoria	1983-92		AOD
Crown Victoria	1993-94		AODE
Crown Victoria	1995-On		4R70W
EA, EB	1988-92	V8	85/95LE
EA, EB	1988-92	6 cyl.	85/95LE
Econoline	1967-77		C4
Econoline E150	1975-96	4.9, 5.8, 7.5L	C6
Econoline E150-350	1981-92		AOD
Econoline E150-350	1989-97	4.9, 5.4, 5.8, 7.3 Diesel, 7.5L	E4OD
Econoline E150-350	1993-98	4.2, 4.6, 5.4L	4R70W/4R75W
Econoline E150-350	1998-03	4.9, 5.4, 5.8, 7.3 Diesel, 7.5L	4R100
Econoline E350 SD	2004-On	6.0 Diesel, 6.8L	5R110W
ED	1993-95	6 cyl.	85/95LE
ED	1993-95	V8	85/95LE
Edge	2007-On	3.5L	6F/6F55
EF, BA	1995-03	V8	85/95LE
EF, BA	1995-03	6 cyl.	85/95LE
Escape	2001-08		CD4E
Escape	2009-On	2.5, 3.0L	6F35
Escape Hybrid	2005-On	2.3L	CVTPSE (HD-10)
Escort	1967-74		BW35
Escort	1981-90		ATX
Escort, ZX2	1991-03		4EAT-F
Excursion	2000-05	5.4, 6.8L, 7.3 Diesel	4R100
Excursion	2003-On	6.0 Diesel	5R110W
EXP	1982-88		ATX
Expedition	1996-97	V8, 5.4L	E4OD
Expedition	1997-02	V8, 4.6L	4R70W
Expedition	1998-02	V8, 5.4L	4R100
Expedition	2003-04	4.6, 5.4L	4R70W
Expedition	2005-07	V8, 5.4L	4R75W/4R75E
Expedition	2005-On	V8, 46.L	4R70E/W
Expedition	2006-07	V8, 5.4L	6R60
Expedition	2008-On		6R75/6R80
Explorer	1991-94		A4LD
Explorer	1995-96	V6, 4.0L	4R44E/4R55E
Explorer	1996-01	V8, 5.0L	4R70W
Explorer	1997-01	V6, 4.0L	5R55E
Explorer America	2008-On		TBA
Explorer	2002-03	4.0, 4.6L	5R55W
Explorer	2006-On	V6, 4.0L	5R55S
Explorer Sport Trac	2001-04	V6, 4.0L	5R55E
Explorer Sport Trac	2004-05	4.0, 4.6L	5R55S
Explorer Sport Trac	2006-On	4.6L	6R60
F100	1965-72		C4
F100	1973-83		C6
F100	1981-83		AOD
F100	1982-83		C5
F150	1975-91		C6
F150	1982-86		C5
F150	1985-92		AOD
F150	1992-97		E4OD
F150	1994-03		4R70W
F150	1998-04	5.4L 16 Valve	4R100
F150	2004-06	5.4L 24 Valve, 6.8L	4R75W/4R75E
F150	2004-On	4.2, 4.6L	4R70W/4R70E
F150	2009-On	5.4L	6R75/6R80

VEHICLE INDEX

FORD

MODEL	YEAR	ENGINE	TRANS
F250	1964-72		C4
F250	1981-93		AOD
F250-350	1968-98		C6
F250-350	1990-97	5.4, 5.8, 7.3 Diesel, 7.5L	E4OD
F250-350	1994-99	4.6, 5.4L	4R70W
F250-350 Super Duty	1998-04	5.4, 5.9, 6.0, 6.8L, 7.3 Diesel	4R100
F250-350 Super Duty	2003-06	5.4L 24 Valve, 6.8L, 6.0 Diesel	5R110W
F250-350 Super Duty	2007-On	5.4L 24V, 6.8L, 6.0, 6.4 Diesel	TorqShift
F350	1965-72		FMX
F450	1989-98		E4OD
F450	1992-96		C6
F450-550	1998-04	5.4, 6.0, 6.8L, 7.3 Diesel	4R100
F450-550	2003-06	5.4L 24V, 6.8L, 6.0 Diesel	5R110W
F450-550	2007-On	5.4L 24V, 6.8L, 6.0, 6.4 Diesel	TorqShift
F500/600	1970-78		C6
Fairlane	1964-70		C4
Fairlane	1966-70		C6
Fairmont	1978-81		C4
Fairmont	1978-83		C3
Fairmont	1982-83		C5
Falcon	1960-64		Fordomatic
Falcon	1965-71		C4
Falcon	1971		C6
Falcon	1971		FMX
Falcon	2005-On		ZF6HP26
Falcon (Aust.) AU	1998-02	V8, 5.0L (Series 1, 2 & 3)	BTR M97LE
Falcon (Aust.) AU	1998-02	V8, 4.9L (Series 1, 2 & 3)	BTR M93LE
Falcon (Aust.) BA	2002-05	V6, 4.0L	BTR M93LE
Falcon (Aust.) BA/FPV	2002-05	V8, 5.4L	BTR M97LE
Falcon (Aust.) BF	2005-On	V6, 4.0L, V8, 5.4L	BTR M93LE
Falcon (Aust.) CH Comm.	1996-99	V8, 5.0L	BTR M97LE
Falcon (Aust.) EA/NA/DA	1988-91	V6, 3.9L (Series 2 & 3)	BTR M85LE
Falcon (Aust.) EB/NC/DC	1988-91	V6, 3.9L (Series 1)	BTR M85LE
Falcon (Aust.) EB/NC/DC	1991-94	V6, 4.0L (Series 2)	BTR M91LE
Falcon (Aust.) XH Comm.	1996-99	V6, 4.0L	BTR M93LE
Festiva	1989-93		F3A
Fiesta (Europe)	1987-On	1.1L	CTX (CVT)
Fiesta	2010-On	1.6L	TBA
Five Hundred	2005-07	V6, 3.0L 6 Sp	AWF21, AF40, TF-80SC
Five Hundred	2005-07	V6, 3.0L	CFT-30 (ZF CVT)
Flex	2008-On	V6, 3.5L	6F35
Focus, ZX5	2000-On	2.0, 2.3L	4F27E
Freestar	2004-On	3.9, 4.2L	4F50N (AX4N)
Freestyle	2005-On	V6, 3.0L	CFT-30 (ZF CVT)
Freestyle	2006-On	V6, 3.0L 6 Sp	AWF21, AF40, TF-80SC
Fusion	2006-On	V6, 3.0, 3.5L 6 Sp	AWF21, AF40, TF-80SC
Fusion	2006-On	L4, 2.3L	FNR5 (Mazda)
Fusion	2009-On		6F35
Fusion Hybrid	2010-On	2.5L	CVTPSE (HD-10)
Galaxy	1999-On		5F31J
Galaxy (Europe)	1997-On		AG4
Granada	1975-81		C4
Granada	1981-82		C3
Granada	1982		C5
LTD	1975-80		C4
LTD	1975-80		C6
LTD	1975-81		FMX
LTD	1980-86		AOD
LTD II	1977-79		C6
LTD II	1977-79		FMX
LTD II	1977-79		C4
Maverick	1970-77		C4
Mondeo (Euro)	2002-On		5F31J

VEHICLE INDEX

FORD

MODEL	YEAR	ENGINE	TRANS
Mustang	1966-81		C4
Mustang	1969-73		FMX
Mustang	1975-86	L4, 2.3L	C3
Mustang	1982-86	L4, 3.8L	C5
Mustang	1984-93	L4, 3.8L	AOD
Mustang	1984-93	V8, 5.0L	AOD
Mustang	1987-93	L4, 2.3L	A4LD
Mustang	1994-95		AODE
Mustang	1996-04		4R70W
Mustang	2005-On	4.0, 4.6L	5R55S
Pinto	1971-80		C4
Pinto	1974-80		C3
Probe	1989-92	L4, 2.2, 3.0L	4EAT-G
Probe	1993-97	V6, 2.5L	4EAT-G
Probe	1994-97	L4, 2.0L	CD4E
Ranchero	1965-79		C4
Ranchero	1968-79		FMX
Ranchero	1977-79		C6
Ranger	1982-86		C5
Ranger	1983-84		C3
Ranger	1985-94		A4LD
Ranger	1995-01	2.3, 2.5, 3.0L	4R44E
Ranger	1995-96	V6, 4.0L	4R55E
Ranger	1997-On	V6, 4.0L	5R55E
Ranger	2001-On	2.3, 3.0L	5R44E
SVT	2004-On		4R100
Taurus	1986-91	L4, 2.5L	ATX
Taurus	1986-91	V6, 3.0, 3.8L	AXOD
Taurus	1991-93		AXODE
Taurus	1994-03	3.0, 3.2, 3.8L (17 Bolt Pan)	AX4S
Taurus	2008-On	3.5L	6F/6F55
Taurus X	2008-On	3.5L	6F/6F55
Taurus, SHO	1995-06	3.0, 3.4L (19 Bolt Pan)	4F50N (AX4N)
Tempo	1984-94		ATX
Territory (Australia) SX	2004-05	4.0L, RWD & AWD	BTR M93LE
Territory (Australia) SY	2005-On	4.0L, RWD	BTR M93LE
Thunderbird	1956-60		Cruiseomatic
Thunderbird	1961-66		MX
Thunderbird	1966-81		C4
Thunderbird	1968-79		C6
Thunderbird	1975-79		FMX
Thunderbird	1980-81		C3
Thunderbird	1980-92		AOD
Thunderbird	1982-86		C5
Thunderbird	1993-94	3.8L	AODE
Thunderbird	1995-97	3.8, 4.6L	4R70W
Thunderbird	2002	3.9L	5R55N
Thunderbird	2003-05	3.9L	5R55S
Torino	1968-76		C4
Torino	1968-76		C6
Torino	1969-76		FMX
Transit Connect	2010-On	2.0L 4 spd.	TBA
Van	1964-77		C4
Van	1975-98		C6
Van	1983-On		AOD
Van	1989-On		E4OD
Windstar	1994-00	3.0, 3.8L	AX4S
Windstar	2001-On	3.8L	4F50N (AX4N)

FUSO

MODEL	YEAR	ENGINE	TRANS
FG, FE, FH, FK	1988-On		JR403E

VEHICLE INDEX

GEO

MODEL	YEAR	ENGINE	TRANS
Metro	1989-On	1.0, 1.3L	MX1
Nova	1985-On	CARB	MX1
Nova	1988-92	EFI	MS7
Nova	1993-On	L4, 1.8L	MS7
Prizm	1985-02	CARB	MX1
Prizm	1988-92	EFI	MS7
Prizm	1993-On	L4, 1.8L	MS7
Spectrum	1985-89	L4, 1.5L	F3A
Storm	1990-93	L4, 1.6, 1.8L 3 Sp	F3A
Storm	1990-93	L4, 1.6, 1.8L 4 Sp	JF403E
Tracker	1989-98	L4, 1.6L	TH180C
Tracker	1996-04	L4, 2.0L	A44DE

GMC

MODEL	YEAR	ENGINE	TRANS
Acadia	2008-On	3.6L	6T75
Caballero	1978-79		TH200
Caballero	1978-80		TH350
Caballero	1980-84		TH250C
Caballero	1980-84		TH350C
Caballero	1980-87		TH200C
Caballero	1985-87		TH200-4R
Canyon	2004-On	2.8, 2.9, 3.7L	4L60E
Envoy	1998-On	4.2L	4L60E
Jimmy	1970-79		TH350
Jimmy	1978-79		TH400
Jimmy	1980-82		TH350C
Jimmy	1982-93		TH700R4
Jimmy	1993-On		4L60E
S15/Sonoma	1982		TH200C
S15/Sonoma	1983-91		TH700R4
S15/Sonoma	1992-On		4L60E
Safari Van	1985-89		TH700R4
Safari Van	1991-93		4L60
Safari Van	1993-On		4L60E
Sierra	2007-On	6.0L	4L70E
Sierra 2500/HD	2008-On	6.0L	6L90E
Sierra 2500/HD, 3500/HD	2006-On	6.6 Diesel, 8.1L 6 Sp	1000
Sierra Denali	2002-06	6.0L	4L65E
Sierra Denali	2002-On	4.8L, 5.0L	4L60E
Sierra Denali	2007-On	6.2L	6L80E
Suburban 1500	1987-92		TH700R4
Suburban 1500	1993-06		4L60E
Suburban 2500	1987-90		TH400
Suburban 2500	1991-On	6.0, 6.5 Diesel, 7.4L	4L80E/4L85E
Suburban 2500	2002-On	6.6 Diesel, 8.1L 5 Sp	1000
Syclone	1992		4L60E
Tahoe 2500	2007-On	6.0 (Iron Block)	4L70E
Tahoe 2500	2007-On	6.0 (Alum. Block)	4L70E
Terrain	2009-On	3.6L	6T70
Truck (C/K series)	1966-90		TH400
Truck (C/K series)	1969-86		TH350C
Truck (C/K series)	1982-92		TH700R4
Truck (C/K series)	1991-06		4L80E/4L85E
Truck (C/K series)	1993-06		4L60E
Typhoon	1992		4L60E
Van	1970-79		TH350
Van	1975-88		TH400
Van	1980-86		TH350C
Van	1983-90		TH700R4
Van	1991-On		4L80E
Van	1993-On		4L60E
Yukon 1500	1991-93		4L60

VEHICLE INDEX

GMC

MODEL	YEAR	ENGINE	TRANS
Yukon 1500	1993-06		4L60E
Yukon 1500, XL	2007-On	6.0L	4L70E
Yukon 2500	1992-06	6.0L	4L80E/4L85E
Yukon 2500, XL	2007-On	6.0L	6L90E
Yukon Denali	1999-04		4L80E
Yukon Denali	2004-06	V8, 6.0L	4L65E
Yukon Denali, XL	2007-On	V8, 5.3, 6.2L	6L80E
Yukon Hybrid	2008-On	6.0L	RWD 2-Mode Hybrid

HEAVY TRUCKS

MODEL	YEAR	ENGINE	TRANS
Bearing Truck	2000-On		AT542
Ford F650	2000-On		MD300
Ford F750	2000-On		MD300
Freightliner FL50	1999-On		1000
Freightliner L7500	1999-On		MD300
Freightliner L7500	2002-On		A581
Hino	2000-On		AT545
Navistar 4700	2000-On		AT545
UD1200	2000-On		450-43LE
UD1400	2000-On		450-43LE
UD1800	2000-On		450-43LE
UD2000	2000-On		AT545
UD2300	2000-On		AT545
UD2600	2000-On		AT545

HOLDEN

MODEL	YEAR	ENGINE	TRANS
308 Torana	1967-69		BW35
308 Torana	1969-97		TH180
308 Torana	1975-98		TH400
Apollo JM	1993-On	3.0L	A540E
Apollo JM	1993-On	2.2L	A140E
Berlina	1988-91	2.0L	TH180
Calais VR	1993-On		4L60E
Caprice	1990-92		TH700
Caprice	1993-On		4L60E
Commodore	1988-On	3.8L, 5.0L	4L60E
Monaro CV8	2002-On	3.7L, V8	4L60E
Rodeo T	1988-On		A43D
Some	1975-86	V8	TH350
Some	1986-90		TH125C
Statesman	1993-On		4L60E
Various	1965-69		Alum PG
VE Commodore	2007-On		6L80E
VM Caprice	2007-On		6L80E
VM Statesman	2007-On		6L80E

HONDA

MODEL	YEAR	ENGINE	TRANS
Accord	1976-78	1.6, 1.8L	2 speed
Accord	1976-83	1.8L	3 speed
Accord	1983	1.8L	AK
Accord	1984-85	1.8L	AS
Accord	1986-89	2.0L	F4
Accord	1990	2.2L	PX4B
Accord	1991-92	2.2L (USA built)	APX4
Accord	1991-93	2.2L (Japan built)	MPXA
Accord	1992	2.2L (Japan built)	MPWA
Accord	1994-97	2.2L	A0YA, MPOA, BOYA
Accord	1995-97	V6, 2.7L	MPZA
Accord	1998-02	L4, 2.3L (Japan built)	MAXA

VEHICLE INDEX

HONDA

MODEL	YEAR	ENGINE	TRANS
Accord	1998-02	V6, 3.0L	B7XA
Accord	1998-02	L4, 2.3L (USA built)	BAXA
Accord	2003-07	V6, 3.0L (Japan built)	BAYA, MAYA
Accord	2003-07	L4, 2.4L (USA built)	BCLA
Accord	2003-07	L4, 2.4L (Japan built)	MCLA
Accord	2008-On	L4, 2.4L (Japan built)	M91A
Accord	2008-On	L4, 2.4L (USA built)	B90A
Accord	2008-On	V6, 3.5L	B97A
Accord Hybrid	2005-On	V6, 3.0L	MURA
Accord Wagon	1991	2.2L	APXA
Civic	1973-80	1.2, 1.5L	2 speed
Civic	1981-85	1.3, 1.5L	3 speed
Civic	1986-87	1.5L	CA
Civic	1988-90	1.5, 1.6L	L4
Civic	1989-90	1.6L AWD	S5
Civic	1991	1.5, 1.6L	ML4A
Civic	1991	1.6L wagon	MPSA
Civic	1992-94		M24A
Civic	1992-95	1.5, 1.8L	A24A, A2YA
Civic	1996	1.6L (except HX)	A4RA
Civic	1997-98	1.6L (except HX)	B4RA, B46A, M4RA
Civic	1999-00	1.6L (except HX)	B4RA, BDRA, S4RA
Civic	2001-05	1.7L (except HX, GX)	BMXA, SLXA
Civic Si	2008-On	L4, 2.0L	MPCA
Civic Del Sol	1995-97		S24A
Civic DX, EX, LX, GX	2006-08	1.8L	SPCA
Civic GX	1999		BDRA
Civic HX	1996-00	CVT	M4VA
Civic HX	2001	CVT	MLYA
Civic HX, GX	2002-05	1.7L CVT	SLYA
Civic Hybrid	2003-05	CVT	SZCA
Civic Hybrid	2006-On	1.7L	SMLA
Civic Hybrid	2006-On	1.3L CVT	SPSA
CR-V	1997		SDMA
CR-V	1997-04	L4, 20, 2.4L AWD	MDMA, M4TA, MRVA
CR-V	1998-04	L4, 2.0, 2.4L	MDLA, MCVA
CR-V	2005-06	L4, 2.4L	MKYA, GPLA
CR-V	2005-06	L4, 2.4L AWD	MKZA, GPPA
CR-V	2007	L4, 2.4L AWD	MZHA
CR-V	2007	L4, 2.4L	MZJA
CR-V	2008	L4, 2.4L AWD	BZHA
CR-V	2008	L4, 2.4L	BZJA
CRX	1981-85	1.3, 1.5L	3 Speed
CRX	1986-87	1.5L	CA
CRX	1988-90	1.5, 1.6L	L4
CRX	1991	1.5, 1.6L	ML4A
Del Sol	1993-97	L4, 1.6L	M24A, S24A
Element	2001-06	L4, 2.4L 2WD	BZKA
Element	2001-07	L4, 2.4L 4WD	MZKA
Element	2007	L4, 2.4L 2WD	MNZA
Element	2008	L4, 2.4L 4WD	BZNA
Element	2008	L4, 2.4L 2WD	BZKA
FCX Clarity	2008-On	Hydrogen	TBA
Fit	2007-On	L4, 1.5L	SMMA
Insight	2000-06	L3, 1.0L CVT	MHTA
Insight	2009-On	L4, 1.3L CVT	SBLA
NSX	1991-01		MR9A
Odyssey	1995-98	2.2, 2.3L	MPJA, MDWA
Odyssey	1999-01	V6, 3.5L	B7TA, B7YA
Odyssey	2002-04	V6, 3.5L	BYBA
Odyssey	2005-07	V6, 3.5L	BGRA, PGRA
Odyssey	2008-On	V6, 3.5L	B36A
Passport	1994-02	2.6, 3.2L	4L30E

VEHICLE INDEX

HONDA

MODEL	YEAR	ENGINE	TRANS
Pilot	2003-06	V6, 3.5L AWD	BVGA
Pilot	2006	V6, 3.5L	BVLA
Pilot	2007	V6, 3.5L AWD	PVGA
Pilot	2007	V6, 3.5L	PVLA
Pilot	2008	V6, 3.5L 4WD	P34A
Pilot	2008	V6, 3.5L 2WD	P35A
Prelude	1979		2 speed
Prelude	1980-83		3 speed
Prelude	1988-89		K4
Prelude	1990-91	L4, 2.0, 2.1L	PY8A, MYBA
Prelude	1992-01	L4, 2.4L	MP1A, M6HA
Prelude DX	1984-87	1.8L Carb.	AS
Prelude Si	1985-87	2.0L Fuel Injected	F4
Ridgeline	2006-On	V6, 3.5L	BJFA, MJFA

HYUNDAI

MODEL	YEAR	ENGINE	TRANS
Accent	1995-99	L4, 1.5L	A4AF1, A4AF2
Accent	2000-On	L4, 1.5, 1.6L	A4AF3
Atoz	1999-On		JF405E
Azera	2006-09	V6, 3.8L	A5HF1
Azera	2009-On	V6, 3.3L	6 spd.
Elantra	1991-95	1.8L	F4A22-2
Elantra	1991-95	1.5, 1.6L	F4A21-2
Elantra	1996-99	1.8, 2.0L	A4AF2
Elantra	2000	1.8L	A4BF3
Elantra	2001-05	2.0L	F4A42
Elantra	2006-On	2.0L	A4CF2
Entourage	2007-On	V6, 3.8L	A5HF1
Equus (Non US)	2004-08	4.5L	F5AH1 (RM45)
Equus (Non US)	2009-On	3.8, 4.6L	ZF6HP26
Equus (Non US)	2009-On	5.0L	8 SPEED
Excel	1986	L4, 1.5L	KM170-1
Excel	1987-88	L4, 1.5L	KM171-1
Excel	1989	L4, 1.5L	KM171-5
Excel	1990-95	L4, 1.5L	F4A21-2
Genesis	2008-On	3.8, 4.6L	ZF6HP26
Genesis Coupe	2008-On	I4, 2.0L TC	5 SP Shiftronic
Genesis Coupe	2008-On	3.8L	ZF6HP26
Pony	2001-On	1.4L	A904
Portico	2010-On	3.3, 3.6L 6 spd.	6 spd. Shiftronic
Santa Fe	2001-06	L4, 2.4, 2.7L	F4A51
Santa Fe	2003-06	3.3, 3.5L	A5HF1
Santa Fe	2007-On	V6, 2.7, 3.3L 4WD	A5HF1
Santa Fe	2007-On	V6, 2.7L	F4A51
Scoupe	1990-92	L4, 1.5L	F4A21-2
Scoupe	1993-95	L4, 1.5L	A4AF1
Sonata	1989-90	L4, 2.4L	KM175-2
Sonata	1990-93	3.0L	KM177-8
Sonata	1990-98	L4, 2.0, 2.4L	F4A22-2
Sonata	1994-98	3.0L	F4A33-1
Sonata	1999-On	L4, 2.4, 2.5, 2.7L	F4A42-2
Sonata	2006-On	V6, 3.3L	A5HF1
Sonata	2009-On	L4 2.4L	A5GF1
Stella	1983-87	1.6L	A904
Stella	1987-88	1.6L	A40D
Tiburon	1997-99	L4, 1.8, 2.0L	A4BF-1
Tiburon	2000-02	L4, 2.0L	A4BF2
Tiburon	2003-06	L4, 2.0L	F4A42-1
Tiburon	2003-06	L4, 2.7L	F4A42-2
Tucson	2005-On	L4, 2.0, 2.7L	F4A42-2
Veracruz	2007-On	3.8L	F21 6 spd. Shiftronic

VEHICLE INDEX

HYUNDAI

MODEL	YEAR	ENGINE	TRANS
XG Grandeur	1999-On	2.0L, 2.5L	F4A42
XG Grandeur	2000-On	V6, 3.0L A5HF1	A5HF1
XG300	1999-01	V6, 3.0L	A5HF1
XG350	2002-05	V6, 3.5L	A5HF1

INFINITI

MODEL	YEAR	ENGINE	TRANS
CX25	2007-On	L4, 2.5L	TBA
CX35	2007-On	V6, 3.5L	RE5R05A
EX35	2008-On	V6, 3.5L	RE5R05A
EX37	2009-On	V6, 3.7L	JR710E/JR711E
FX35	2003-On	V6, 3.5L	RE5R05A
FX45	2003-On	V6, 4.5L	RE5R05A
FX50, S	2009-On	V8, 5.0L	JR710E/JR711E
G20	1991-93	L4, 2.0L	RL4F03A/V
G20	1994-99	L4, 2.0L	RE4F03A/V
G20	2000-02	L4, 2.0L	RE4F03B/W
G35, S	2003-08	V6, 3.5L	RE5R05A
G37	2008	V6, 3.5L	RE5R05A
G37	2009-On	V6, 3.7L	JR710E/JR711E
I30	1995-99	V6, 3.0L	RE4F04A/V
I30	2000-01	V6, 3.0L	RE4F04B
I35	2002	V6, 3.5L	RE4F04B
I35	2003-04	V6, 3.5L	RE5F22A
J30	1992-97	V6, 3.0L	RE4R01A
M30	1990-92	V6, 3.0L	RE4R01A
M35	2005-07	V6, 3.5L	RE5R05A
M45	2003-On	V8, 4.5L	RE5R05A
Q45	1990-01	V8, 4.5L	RE4R03A
Q45	2002-On	V8, 4.5L	RE5R05A
QX4	1997-03	V6, 3.3, 3.5L	RE4R01A
QX56	2004-On	V8, 5.6L	RE5R05A

ISUZU

MODEL	YEAR	ENGINE	TRANS
Amigo	1991-94	L6, 2.6L	A44DL
Amigo	1999-00	V6, 3.2L	4L30E
Ascender	2003-On	L6, 4.2L, V8, 5.3L	4L60E
Axiom	2002-04	V6, 3.5L	4L30E
FRR truck	1995-On		AT542
Hombre	1996-00	L4, 2.2L, V6, 4.3L	4L60E
I-Mark	1981-84	1.8L	A40
I-Mark	1985-92	1.5L	F3A
Impulse	1983-89	2.0L Non Turbo	A42D
Impulse	1985-89	2.0, 2.3L Turbo	A44DL
Impulse	1990-93	1.8L	JF403E
I-Series	2006-On	2.8, 2.9, 3.5, 3.7L	4L60E
NPR truck	1987-05	5.7, 6.0L	4L80E
NPR truck	1988-98	3.9L Diesel	JR403E
NPR truck	2008-On	L4 5.2L Diesel	A465 (AS68RC)
NQR truck	1999-On	4.75, 5.2 Diesel	450-43LE
Oasis	1995-97	2.2L	MPJA
Oasis	1998	2.3L	MDWA
Oasis	1999-01	2.2, 2.3L	B7YA, B7TA
Passenger Cars	1965-75	Various	BW35
Passenger Cars	1983-On	Various	TH125C
Pick-up	1981-82	2.0L	TH200
Pick-up	1983-87	2.0, 2.3L	A40
Pick-up	1988-95	3.1L	A44DL
Rodeo	1990-03	ALL	4L30E
Rodeo	2003-04	3.2, 3.5L	A340 (AW30-40LS)
Stylus	1991-93	L4, 1.6L	F3A

VEHICLE INDEX

ISUZU

MODEL	YEAR	ENGINE	TRANS
Trooper	1988-91	2.6, 2.8L	A340H
Trooper	1990-02	3.2, 3.5L	4L30E
Truck - some	1972-On		A727
Vehicross	1999-01	V6, 3.5L	4L30E

JAGUAR

MODEL	YEAR	ENGINE	TRANS
3.4S & 3.8S	1963-68		BW35
E type & Series II	1964-71	4.2L, L6	BW8/12
E type Series III	1971-74	V12	BW12
MK10 & 420G	1964-70	4.2L, L6	BW8/12
S type	2000-02	3.0, 4.0L	5R55N
S type	2003-On	3.0, 4.2L	ZF6HP26
Super V8	2008-On	4.2L SC	ZF6HP26
X type	1999-On	2.0, 2.5, 3.0L	JF506E
X type	2002-07	2.5, 3.0L	ZF6HP26
XF	2009-On	4.2L SC	ZF6HP26
XFR	2009-On	5.0L SC	ZF6HP26
XJ Vanden PLAS	1990-97	L6, 4.0L	ZF4HP24
XJ Vanden PLAS	1998-03	4.0L, V8	ZF5HP24
XJ Vanden PLAS	2004-On	V8, 4.2L	ZF6HP26
XJ12	1973-77	5.3L, V12	BW12
XJ12	1973-93	5.3L, V12	TH400
XJ12	1994-98	5.3, 6.0L	4L80E
XJ40	1987-93	3.6L	ZF4HP22
XJ40	1987-94	4.0L	ZF4HP24
XJ6	1968-70	4.2L, L6	BW8/12
XJ6	1968-73	2.8L, L6	BW35
XJ6	1969-73	3.4, 4.2L	BW12
XJ6	1974-87	4.2L, L6	BW65
XJ6	1987-05	2.9, 3.2, 3.6L	ZF4HP22
XJ6	1987-94	4.0L, L6	ZF4HP24
XJ6	1988-94	4.2L, L6	ZF4HP22
XJ6	1994-97	4.0L	ZF4HP24
XJ6	1997-02	3.2L	ZF4HP24
XJ8	1994-99	4.0L, V8	ZF5HP24
XJ8 (X300)	1997-On		ZF5HP24
XJL	1998	4.0L, V8	ZF5HP24
XJR	1998-99	4.0L, V8	722.6 (W5A580)
XJS	1976-92	V12	TH400
XJS	1987-97	3.6L	ZF4HP22
XJS	1989-96	4.0L	ZF4HP24
XJS	1993-98	6.0L	4L80E
XJS	1998-On	4.0L, V8 SC	4L80E
XK8	1996-00	V8, 4.0L	ZF5HP24
XK8	2001-02	V8, 4.0L	5R55N
XK8	2003-On	V8, 4.2L	ZF6HP26
XKR	2001-02	V8, 4.0L	5R55N
XKR	2003-On	V8, 4.2L	ZF6HP26

JEEP

MODEL	YEAR	ENGINE	TRANS
Cherokee	1987-01	2.5, 4.0L	AW4 (A340F)
Cherokee	1994-00	2.5L, V6	A904
CJ5	1980-83		TF6
CJ7	1976-79		TH400
CJ7	1980-86		TF6
CJ8	1981-85		TF6
Comanche	1980-86		TF6
Comanche	1987-93	2.5, 4.0L	AW4 (A340F)
Commander	2006-On	3.7L	722.6
Commander	2006-On	4.7, 5.7L	545RFE

VEHICLE INDEX

JEEP

MODEL	YEAR	ENGINE	TRANS
Compass/Patriot	2007-On	2.4L CVT	JF011E
Grand Cherokee	1991-93	4.0L, V6	AW4 (A340F)
Grand Cherokee	1991-98	5.2, 5.9L	A518
Grand Cherokee	1999-02	4.7L, V8	45RFE
Grand Cherokee	2003-05	4.7L, V8	545RFE
Grand Cherokee	2006-On	4.7, 5.7, 6.1L Diesel	722.6
Grand Cherokee, Laredo	1994-04	4.0, 5.2L	A500
Grand Wagoneer	1972-On		TF6
Grand Wagoneer	1984-93		TF8
Liberty	2002-03	3.7L	45RFE
Liberty	2003-On	2.4L	42RLE
Liberty	2004-On	3.7L, 2.8 Diesel	545RFE
Pickup	1970-79		TH400
Pickup	1980-87		TF8
Pickup	1982-86		TF6
Pickup	1987-89		AW4 (A340F)
Wagoneer	1965-79		TH400
Wagoneer	1980-86		TF8
Wagoneer	1987-02		AW4
Wrangler	1987-On		TF6
Wrangler	2003-On	2.4, 4.0, 3.8L	42RLE

JENSEN

MODEL	YEAR	ENGINE	TRANS
ALL	1962-On		A727

KIA

MODEL	YEAR	ENGINE	TRANS
Amanti	2004-05	V6, 3.5L	F5A51 (A5HF1)
Amanti	2006-On	V6, 3.5L, 3.8L	A5HF1
Avella	1994-On		F4AEL
Borrego	2008-On	V8 4.6L, 6 spd.	TBA
Borrego	2008-On	V6 3.8L, 5 spd.	TBA
Clarus	1995-96	2.0L, L4	G4AEL
Concorde		2.0L, L4	G4AEL
Credos (Clarus)	1995-96		G4AEL
Forte, EX, LX	2009-On	2.0L 4 spd.	TBA
Forte, SX	2009-On	2.4L 5 spd.	TBA
Joice (Carstar)	1999-On		G4AEL
Leo		1.5L, L4	F4AEL
Optima	2001-05	2.4, 2.5, 2.7L	F4A42
Optima	2006-On	2.4, 2.7L	A5GF1
Potentia	1992-95	2.2L, L4	N4A-HL
Pride	1987-92		F3A
Rio/Rio Cinco/Rio 5	1999-05	L4, 1.5, 1.6L	F4AEL
Rio/Rio Cinco/Rio 5	2006-On	L4, 1.6L	A4AF3 (F4A32)
Rondo	2007-On	L4, 2.4L	F4A42
Rondo	2007-On	V6, 2.7L	A5GF1
Sedona	2001-05	V6, 3.5L	F5A51
Sedona	2006-On	V6, 3.8L	A5HF1
Sephia	1992-01	1.8L, L4	F4AEL
Shuma	1997-On		F4AEL
Sorrento	2003-04	V6, 3.5L	A44DE
Sorrento	2005-On	V6, 3.3, 3.5, 3.8L	RE5R05A (A5SR1/2)
Sorrento	2007-On	V6, 3.8L	RE5R05A (A5SR1/2)
Soul	2010-On	1.6, 2.0L	4 spd.
Spectra	2001-04	L4, 1.8, 2.0L	F4AEL
Spectra	2004-05	L4, 2.0L	F4A42
Spectra	2006-09	L4, 2.0L	A4CF2
Sportage	1994-02	2.0L, L4	A44DE
Sportage	2005-On	2.0, 2.7L	F4A42

VEHICLE INDEX

LAFORZA

MODEL	YEAR	ENGINE	TRANS
Sport Truck	1989-On		A4LD

LANCIA

MODEL	YEAR	ENGINE	TRANS
4 x 4	1982-98		TF8/727
Chroma	1989-94	2.0L 8V, 2.0L 16V	ZF4HP18
Dedra	1992-98		ZF4HP18
Thema	1985-87	2.0L	ZF3HP22
Thema	1989-91	2.0, 2.5, 3.0L	ZF4HP18
Thema	1993-98	3.0L	ZF4HP18E
Thesis	2002-On	3.0L, V6	AW55-50SN
Y10	1986-92	1.3L CVT	RE0F05E
Y9	1987-91		ZF3HP22

LAND ROVER

MODEL	YEAR	ENGINE	TRANS
Austin Rover R17	1991-98		ZF4HP14Q
Defender 90	1994-97	3.9, 4.0L	ZF4HP22/24
Discovery	1994-04	ALL	ZF4HP22/24
Freelander	1999-05	2.5L	JF506E
Freelander	2006-On		AWF21, AF40, TF-80SC
LR2	2007-On	L6, 3.2L	AWF21, AF40, TF-80SC
LR3	2005-On	V6, 4.0L, V8, 4.4L	ZF6HP26
LRX	2010-On	2.0L TD	ZF6HP26
Range Rover	1987-02	ALL	ZF4HP22
Range Rover	2003-04	V8, 4.4L	ZF5HP24
Range Rover	2005-On	V8, 4.2, 4.4L	ZF6HP26
Rover 75	1999-On		JR506E
Tempest	1997-02	4.0L	ZF4HP22

LEXUS

MODEL	YEAR	ENGINE	TRANS
ES250	1989-91	V6, 2.5L	A540E
ES300	1992-93	V6, 3.0L	A540E
ES300	1994-01	V6, 3.0L 17 Bolt pan	A541E
ES300	1998-01	V6, 3.0L 18 Bolt pan	U140E
ES300	2002-03	V6, 3.0L	U150E
ES330	2004-06	V6, 3.3L	U151E
ES350	2007-On	V6, 3.5L	U660E
GS300	1993-95	V6, 3.0L	A341E
GS300	1996-97	V6, 3.0L	A350E
GS300	1998-05	V6, 3.0L 5 Sp	A650E
GS300	2006	V6, 3.0L 6 Sp	A960E
GS300	2006	V6, 3.0L 6 Sp AWD	A760H
GS300	2007-On	V6, 3.5L 6 Sp	A760E
GS350	2007-On	V6, 3.5L 6 Sp	A760E
GS350	2007-On	V6, 3.5L 6 Sp AWD	A760H
GS400	1998-00	V8, 4.0L	A650E
GS430	2001-05	V8, 4.3L	A650E
GS430	2005-On	V8, 4.3L	A761E
GS450h Hybrid	2007-On	V6, 3.5L CVT	L110 (HR-10)
GS460	2008-On	V8, 4.6L	TL-80SN (AA80E)
GX470	2003-09	V8, 4.7L	A750F
GX470	2010-On	V8, 4.6L	AB60E
HS250h Hybrid	2010-On	2.4L	P112
IS/F	2008-On	V8, 5.0L 8 Sp	TL-80SN (AA80E)
IS250	2006-On	V6, 2.5L AWD	A760H
IS250. C	2006-On	V6, 2.5L	A960E
IS300	2002-06	V6, 30L	A650E
IS350, C	2002-On	V6, 3.5L	A761E
LS400	1990-97	V8, 4.0L	A341E
LS400	1998-00	V8, 4.0L	A650E

VEHICLE INDEX

LEXUS

MODEL	YEAR	ENGINE	TRANS
LS430	2001-03	V8, 4.3L	A650E
LS430	2004-06	V8, 4.3L	A761E
LS460, LS460L	2007-On	V8, 4.6L 8 Sp	TL-80SN (AA80E)
LS600h, LS600hL	2007-On	V8, 5.0L CVT	L110F
LX450	1996-97	V8, 4.5L	A343F
LX470	1998-02	V8, 4.7L	A343F
LX470	2003-On	V8, 4.7L	A750F
LX570	2008-On	V8, 5.7L AWD 6spd.	AB60F
RX300 - 2WD	1998-03	V6, 3.0L	U140E
RX300 - 4WD	1998-03	V6, 3.0L	U140F
RX330 - 2WD	2004-06	V6, 3.3L	U151E
RX330 - 4WD	2004-06	V6, 3.3L	U151F
RX330 Hybrid	2006	V6, 3.3L CVT	P310, Q211
RX350 - 2WD	2007-08	V6, 3.5L	U151E
RX350 - 4WD	2007-08	V6, 3.5L	U151F
RX350 - 2WD	2009-On	V6, 3.5L	6 Spd.
RX350 - 4WD	2009-On	V6, 3.5L	6 Spd.
RX400h Hybrid	2006-07	V6, 3.3L CVT	P310, Q211
RX450h Hybrid - 2WD	2008-On	V6, 3.5L CVT	P310, Q211
RX450h Hybrid - 4WD	2008-On	V6, 3.5L CVT	P310, Q211
SC300	1992-97	V6, 3.0L	A340E
SC300	1998-00	V6, 3.0L	A341E
SC400	1992-97	V8, 4.0L	A341E
SC400	1998-00	V8, 4.0L	A650E
SC430	2001-05	V8, 4.3L	A650E
SC430	2006-On	V8, 4.3L	A761E

LINCOLN

MODEL	YEAR	ENGINE	TRANS
Aviator	2003-On	V8, 4.6L	5R55S
Blackwood	2002	V8, 5.4L	4R100
Continental	1980-82	V8, 5.0L	ZF4HP22
Continental	1988-91		AXOD
Continental	1991-94	V6, 3.8L	AXOD-E, AX4S
Continental	1995-02	V8, 4.6L	AX4N (4F50N)
LS	2000-02	3.0, 3.9L	5R55N
LS	2003-On	3.0, 3.9L	5R55S
Mark Lt Pick-Up	2006-07	V8, 5.4L 24V	4R75E
Mark Lt Pick-Up	2007-On	V6, 4.2L, V8, 4.6L	4R70W
Mark VII	1988-92		AOD
Mark VII W/Diesel	1984-86		ZF4HP22
Mark VIII	1993-95		AODE
Mark VIII	1996-98		4R70W
MKS	2009-On	3.7L	6F/6F55
MKT	2010-On	V6, 3.7, 3.5L	6F/6F55
MKX	2007-On	V6, 3.5L, AWD	6F/6F55
MKZ	2007-On	V6, 3.5L	AWF21, AF40, TF-80SC
MKZ	2007-On	L4, 2.3L 5 Sp	FNR5
Navigator	1997	V8, 5.4L	E4OD
Navigator	1998-04	V8, 5.4L	4R100
Navigator	2005-07	V8, 5.4L, 24V	ZF6HP26
Navigator/L	2008-On		6R75/6R80
Town Car	1987-92		AOD
Town Car	1991-92		AOD
Town Car	1992-05	V8, 4.6L	AODE, 4R70W
Town Car	1993-95		AODE
Town Car	1996-On		4R70W
Town Car	2006-On	V8, 4.6L	4R75E
Various	1951-71		FMX
Versailles	1977-80		C4
Zephyr	2006-On	L4, 2.3L 5 Sp	FNR5
Zephyr	2006-On	V6, 3.0L 6 Sp	AWF21, AF40, TF-80SC

VEHICLE INDEX

LONSDALE

MODEL	YEAR	ENGINE	TRANS
YD41, YD45	1982-83	L4, 2.3L 5 Sp	BW40

LOTUS

MODEL	YEAR	ENGINE	TRANS
Excel SA	1986-92	2.2L	ZF4HP22

MASERATI

MODEL	YEAR	ENGINE	TRANS
228, 430	1988-On		ZF4HP18
All 3 Speeds	1982-89		TF8/727
Biturbo	1988-97	2.5, 2.8L	ZF4HP22
Gran Turismo	2007-On	V8, 4.2L	ZF6HP26
Gran Turismo	2009-On	V8, 4.7L	ZF6HP26
Quattroporte	2004-On	V8, 4.2L	ZF6HP26

MAYBACH

MODEL	YEAR	ENGINE	TRANS
57	2002-On	V12, 6.0L	722.6
57 "Special"	2005-On	V12, 6.0L Bi-turbo	722.6
62	2002-On	V12, 6.0L	722.6
62 "Special"	2006-On	V12, 6.0L Bi-turbo	722.6
67 "Special"	2008-On	V12, 6.0L Bi-turbo	722.6
Landaulet	2009-On	V12	TBA

MAZDA

MODEL	YEAR	ENGINE	TRANS
2	2009-On	1.3, 1.5L 4 spd.	TBA
3	2004-On	2.0, 2.3L, 4 Sp	FN4A-EL (4F27E)
3	2006-On	2.3L, 5 Sp	FS5A-EL (FNR5)
5	2006-07	2.3L	FN4A-EL (4F27E)
5	2008-On	2.3L	FS5A-EL (FNR5)
6	2003-05	2.3L	FN4A-EL (4F27E)
6	2003-05	3.0L	JA5A-EL (JF506E)
6	2006-On	2.3, 2.5L	FS5A-EL (FNR5)
6, 6s	2005-On	3.0, 3.7L	AW6AX-EL, TF-80SC
323	1986-88	1.6L, L4	F3A
323	1988-91	1.6L	G4AHL
616	1967-70		BW35
616	1971-78		L3N71B
626	1980-82	2.0L, L4	L3N71B
626	1983-86	2.0L, L4	F3A
626	1986-93		G4AEL
626	1994-02	2.0L, L4	CD4E
626	1994-02	2.5L, V6	GF4AEL
808	1972-77		L3N71B
818	1972-76		L3N71B
929	1988-91	3.0L, V6	N4A-EL
929	1992-95	3.0L, V6	R4A-EL (RE4R01A)
1500	1967-69		BW35
1800	1969-74		BW35
323 AWD	1990-91	1.6L, L4	G4AEL
323, Protege	1990-96	1.6, 1.8L L4	F4AEL
3i, 3S, 3SP23	2004-On	2.0, 2.3L, 4 Sp	FN4A-EL (4F27E)
6i	2003-05	2.3L, L4	FN4A-EL (4F27E)
6S	2003-05	V6, 3.0L 5 Sp	JA5A-EL (JF506E)
6S	2006-On	V6, 3.0L 6 Sp	AW6A-EL, TF-80SC
AZ Wagon	1999-On		JF405E
B Series - ALL	1994	2.3, 3.0, 4.0L	A4LD
B2000	1982-84		L3N71B
B2200	1982-84		L3N71B
B2200	1990-93	2.2L	L4N71B

VEHICLE INDEX

MAZDA

MODEL	YEAR	ENGINE	TRANS
B2300	1995-99		4R44E
B2300	2000-On		5R55E
B2500	1998-01		4R44E
B2600	1986-93	4wd	L3N71B
B2600	1992-93	4wd	R4A-EL
B2600	1992-93	2wd	L4N71B
B3000	1994-99		4R44E
B3000	2000-On		5R55E
B4000	1994-96		4R55E
B4000	1997-On		5R55E
Cosmo	1976-78		L3N71B
CX7	2007-On	L4, 2.3L 6 Sp	AW6A-EL, TF-80SC
CX7	2007-On	L4, 2.3L 6 Sp AWD	AW6AX-EL, TF-80SC
CX9	2007-On	V6, 3.5, 3.7L 2WD	AW6A-EL, TF-80SC
CX9	2007-On	V6, 3.5, 3.7L AWD	AW6AX-EL, TF-80SC
GLC	1977-83		L3N71B
GLC	1981-86		F3A
Miata MX5	1991-97	1.8L, L4	L4N71B
Miata MX5	1998-05	1.8L, L4	A44DE
Miata MX5	2006-On	L4, 2.0L 6 Sp	SJ6A-EL (Activematic)
Millenia	1995-02	2.3L, V6	LJ4A-EL
Millenia	1995-02	2.5L, V6	GF4AEL
Mizer	1971-73		L3N71B
Montrose	1974-77		L3N71B
MPV (Van)	1989-95	2.6L	L4N71B
MPV (Van)	1989-99	3.0L	R4AEL (RE4R01A)
MPV (Van)	2000-01	2.5L, V6	GF4AEL
MPV (Van)	2002-On	3.0L 5 Sp	JA5A-EL (JF506E)
MX3	1992-95	1.6, 1.8L L4	F4AEL
MX6	1986-93		G4AEL
MX6	1994-97	2.0L	CD4E
MX6	1994-97	2.5L, V6	GF4AEL
Navajo	1991-94	V6, 4.0L	A4LD
Protégé	1990-98		F4AEL
Protégé	1999-04		FN4A-EL (4F27E)
Protégé5	2002-On		FN4A-EL (4F27E)
R100	1971-72		L3N71B
RX2	1971-74		L3N71B
RX3	1972-77		L3N71B
RX4	1974-78		L3N71B
RX7	1980-83		L3N71B
RX7	1984-88		L4N71B
RX7	1989-92		N4A-EL
RX7	1993-96		R4AEL (RE4R01A)
RX8	2004-05	Rotary 1.3L 4 Sp	RC4-AEL
RX8	2006-On	Rotary 1.3L 6 Sp	SJ6A-EL (Activematic)
Titan truck (2 ton)	1990-On		JR403E
Tribute	2001-08	2.0, 2.3, 3.0L	CD4E
Tribute	2009-On	3.0L	6F35
Tribute Hybrid	2008-On	2.3L	CVTPSE (HD-10)

MERCEDES

MODEL	YEAR	ENGINE	TRANS
190	1984-93		722.4
200 Series	1974-86		722.1
200 Series	1987-91		722.4
300 Series	1975-81		722.1
300 Series	1981-94		722.4
300 Series	1990-96	5 Sp	722.5
400 Series	1974-85		722.1
400 Series	1986-96		722.3
500 Series	1984-94		722.3

VEHICLE INDEX

MERCEDES

MODEL	YEAR	ENGINE	TRANS
600	1992-94		722.3
A140	1997-04		722.7
A150	2004-On	1.5L	722.8
A160	1997-04		722.7
A160 CDI	2004-On	2.0L Diesel	722.8
A170	1997-04		722.7
A170	2004-On	1.7L	722.8
A180 CDI	2004-On	2.0L Diesel	722.8
A190	1997-04		722.7
A200, Turbo	2004-On	2.0L, Turbo	722.8
A200 CDI	2004-On	2.0L Diesel	722.8
B150	2005-On	1.5L	722.8
B170	2005-On	1.7L	722.8
B180 CDI	2005-On	2.0L Diesel	722.8
B200 CDI	2005-On	2.0L Diesel	722.8
B200, Turbo	2005-On	2.0L, Turbo	722.8
C220	1994-96		722.4
C230	1997-05	1.8, 2.3L	722.6
C230	1997-05	2.5L	722.9
C240	2002-05	2.6L	722.6
C280	1994-96	2.8L	722.4
C280	1997-On	2.8L	722.6
C280	2006	3.0L	722.6
C280	2006-On	3.0L	722.9
C320	2000-05	3.2L	722.6
C350	2006	3.5L	722.6
C350	2006-On	3.5L	722.9
C36	1995-96	3.6L	722.4
C36	1997	3.6L	722.6
C43	1998-00	V8, 4.3L	722.6
C55	2005-06	V8, 5.5L	722.6
CL500	1998-04	V8, 5.0L	722.6
CL500	2005-06	V8, 5.0L	722.9
CL500	2007-On	V8, 5.0L	722.9
CL55 AMG	2001-On	V8, 5.5L	722.6
CL600	1998-06	V12, 5.5, 5.8, 6.0L	722.6
CL600	2007-On	V12, 5.5L	722.9
CL65 AMG	2005-On	V12, 6.0L	722.6
CLK320	1998-05	V6, 3.2L	722.5
CLK350	2006-On	V6, 3.5L	722.9
CLK430	1999-03	V8, 4.3L	722.6
CLK500	2003-04	V8, 5.0L	722.6
CLK500	2005-On	V8, 5.0L	722.9
CLK55 AMG	2001-On	V8, 5.5L	722.6
CLK550	2007-On	V8, 5.5L	722.9
CLK63 AMG	2008-On	V8, 6.2L	722.9
CLS500	2006	V8, 5.0L	722.9
CLS55 AMG	2006	V8, 5.5L	722.6
CLS550	2007-On	V8, 5.5L	722.9
CLS63 AMG	2007-On	V8, 6.3L	722.9
E220 Cdi	TBA	2.2L Diesel	722.6
E250 Bluetec	2010-On	2.2L Turbo Diesel	TBA
E300	1995-96	L6, 3.0L	722.3
E300	1997-99	L6, 3.0L	722.6
E320	1994-96	L6, 3.2	722.3
E320	1997-07	3.2 Diesel	722.6
E320	2008-On	3.2 Diesel	722.9
E350	2006	V6, 3.5L	722.6
E350	2007-On	V6, 3.5L	722.9
E420	1997-99	V8, 4,2L	722.6
E420	1997-99	V8, 4,2L	722.3
E430	1998-02	V8, 4.3L	722.6

VEHICLE INDEX

MERCEDES

MODEL	YEAR	ENGINE	TRANS
E500	1994-99	V8, 5.0L	722.3
E500	2003-04	V8, 5.0L	722.6
E500	2005-06	V8, 5.0L	722.6
E500	2005-06	V8, 5.0L	722.9
E55 AMG	1999-On	V8, 5.5L	722.6
E550	2007-On	V8, 5.5L	722.9
E63 AMG	2007-On	V8, 6.3L	722.9
G500	2002-On	V8, 5.0L	722.6
G55 AMG	2003-On	V8, 5.5L	722.6
GL320	2007-On	3.0L Diesel	722.9
GL450	2007-On	V8, 4.6L	722.9
GL550	2008-On	V8, 5.5L	722.9
GLK350	2009-On	V6, 3.5L	722.9
GLK Vision	2009-On	TBA	722.9
ML320	1998-02	V6, 3.2L	722.6
ML320 Bluetec/CDI	2006-On	3.0L TD	722.9
ML350	2003-05	V6, 3.5L	722.6
ML350	2006-On	V6, 3.5L	722.9
ML430	1999-01	V8, 4.3L	722.6
ML450	2009-On	V8, 4.3L	RWD 2-Mode Hybrid
ML500	2002-05	V8, 5.0L	722.6
ML500	2006-On	V8, 5.0L	722.9
ML55	2000-03	V8, 5.5L	722.6
ML550	2008-On	V8, 5.5L	722.9
ML63 AMG	2007-On	V8, 6.3L	722.9
R320	2007-On	V6, 3.2L Diesel	722.9
R350	2006-On	V6, 3.5L	722.9
R500	2006-On	V8, 5.0L	722.9
R63	2007-On	V8, 6.3L	722.9
S320	1994-95	L6, 3.2L	722.5
S320	1996-99	L6, 3.2L	722.6
S350	1994-95	L6, 3.4L Diesel	722.3
S350	2006-On	V6, 3.7L	722.6
S400 Hybrid	2010-On	V6, 3.5L	722.9
S420	1994-95	V8, 4.2L	722.3
S420	1996-99	V8, 4.2L	722.6
S430	2000-06	V8, 4.3L	722.6
S430	2006-On	V8, 4.3L	722.9
S500	1994-95	V8, 5.0L	722.3
S500	1996-06	V8, 5.0L	722.6
S500	2006-On	V8, 5.0L	722.9
S55 AMG	2001-On	V8, 5.5L	722.6
S550	2007-On	V8, 5.5L	722.9
S600	1994-95	V12, 6.0L	722.3
S600	1996-On	V12, 5.5, 5.8, 6.0L	722.6
S65 AMG	2007-On	V12, 6.0L	722.6
SL320	1994-97	L6, 3.2L	722.5
SL500	1994-95	V8, 5.0L	722.3
SL500	1996-03	V8, 5.0L	722.6
SL500	2004-On	V8, 5.0L	722.9
SL55 AMG	2003-08	V8, 5.5L	722.6
SL550	2009-On	V8, 5.5L	722.9
SL600	1994-95	V12, 6.0L	722.3
SL600	1996-On	V12, 6.0L Bi-turbo	722.6
SL63 AMG	2009-On	V8, 6.3L	7 spd multi clutch
SL65 AMG, Black Series	2005-On	V12, 6.0L Bi-turbo	722.6
SLK230	1998-04	L4, 2.3, V6, 3.2L	722.6
SLK280	2006-08	V6, 3.0L	722.9
SLK300	2009-On	V6, 3.0L	722.9
SLK32 AMG	2002-04	V6, 3.2L	722.6
SLK350	2005-On	V6, 3.5L	722.6
SLK55 AMG	2005-On	V8, 5.5L	722.9
SLR McLaren	2005-On	V8, 5.5L	722.6

VEHICLE INDEX

MERCEDES

MODEL	YEAR	ENGINE	TRANS
V Class	1996-04		ZF4HP20

MERCURY

MODEL	YEAR	ENGINE	TRANS
Bobcat	1974-87		C3
Bobcat	1974-87		C4
Capri	1972-81		C4
Capri	1979-86		C3
Capri	1982-86		C5
Capri	1991-94		G4EAT
Comet	1964-76		C4
Comet	1966-69		C6
Comet	1969		FMX
Cougar	1967-78		C6
Cougar	1967-81		C4
Cougar	1971-79		FMX
Cougar	1980-92		AOD
Cougar	1982-86		C5
Cougar	1993-95		AODE
Cougar	1996-97		4R70W
Cougar	1999-02		CD4E
Grand Marquis	1983-92		AOD
Grand Marquis	1993-95		AODE
Grand Marquis	1996-On		4R70W
LN7	1982-83		ATX
Lynx	1981-86		ATX
Marauder	2003-04	V8, 4.6L	4R70W/4R70E
Mariner	2005-08	2.3, 3.0L	CD4E
Mariner	2009-On	2.5, 3.0L	6F35
Mariner Hybrid	2006-On	2.3L	CVTPSE (HD-10)
Marquis	1983-86		AOD
Marquis	1983-86		C3
Marquis	1983-86		C5
Meteor	1951-64		Fordomatic
Meteor	1965-72		C4
Meteor	1966-72		C6
Milan	2006-On	3.0, 3.5L	AWF21, AF40, TF-80SC
Milan	2006-On	2.3L	FNR5
Milan	2009-On	2.5L	6F35
Milan Hybrid	2010-On	2.5L	CVTPSE (HD-10)
Monarch	1975-80		C4
Monarch	1977-80		L3N71B
Montego	1968-76		C4
Montego	1968-76		C6
Montego	1970-76		FMX
Montego	2005-07	3.0L CVT (ZF)	CFT-30
Montego	2005-07	3.0L	AWF21, AF40, TF-80SC
Monterey	2004-On	V6, 4.2L	4F50N (AX4N)
Mountaineer	1997-01	5.0L	4R70W
Mountaineer	1997-01	4.0L	5R55E
Mountaineer	2002-03	4.0, 4.6L	5R55W
Mountaineer	2004-05	4.0, 4.6L	5R55S
Mountaineer	2006-On	V6, 4.0L	5R55S
Mountaineer	2006-On	V8, 4.6L	6R60
Mystique	1995-On	2.0, 2.5L	CD4E
Sable	1986-90		AXOD
Sable	1991-03	3.0, 3.8L 17 Bolt pan	AX4S
Sable	1995-00	3.0L 19 Bolt pan	AX4N
Sable	2001-05	3.0L 19 Bolt pan	4F50N (AX4N)
Sable	2008-On	3.5L	6F/6F55
Topaz	1987-94		ATX
Tracer	1987-90		F3A
Tracer	1991-98		F4EAT

VEHICLE INDEX

MERCURY

MODEL	YEAR	ENGINE	TRANS
Villager	1993-02		4F20E (RE4F04A)
Zephyr	1976-83		C3
Zephyr	1978-81		C4
Zephyr	1982-83		C5

MERKUR

MODEL	YEAR	ENGINE	TRANS
Magnee MKIV	1965-69		BW35
Roadster GT	1967-76		BW35
Roadster GT	1976-On		BW65
Scorpio	1987-89		A4LD
XR4Ti	1985-89		C3

METROCAB TAXI

MODEL	YEAR	ENGINE	TRANS
Series 1 & 2	1987-On		A4LD

MG

MODEL	YEAR	ENGINE	TRANS
1100	1965-69	1.1L	MK2
1300	1967-73	1.3L	MK2
Magnette MK4	1965-66	1.6L	BW35
MGB, MGB GT	1967-76	1.8, 3.5L	BW35
MGC	1967-71	3.0L	BW35
Roadster, GT	1976-05		BW65

MITSUBISHI

MODEL	YEAR	ENGINE	TRANS
1100, 1500	All		BW35
1800, 2000	All		BW35
3000GT	1991-99		F4A33-1
Cantor (2 ton truck)	1990-On		JR403E
Celeste	1976-81	1.6, 2.0L	A904
Charisma GLX	1995-On	1.6L	F4A22-2
Cordia	1983		KM170
Cordia	1984-88		KM172
Delica	2007-On		JF011E
Diamante	1992-96		F4A33-1
Diamante	1997-04		F4A51
Eclipse	1988-89	Non Turbo	KM175-5
Eclipse	1990-94	1.8, 2.0L Non turbo	F4A22-2
Eclipse	1991-98	2.0L Turbo	F4A33-1
Eclipse	1991-99	2.0L AWD	W4A32-1
Eclipse	1995-98	2.0L Non turbo	A604
Eclipse	1996-05	V6, 3.0L	F4A51
Eclipse	1996-99	2.4L	F4A23
Eclipse	2000-05	2.4L	F4A42
Eclipse	2006-On	V6, 3.8L	F5A5A
Eclipse	2006-On	2.4L	F4A4B
Eclipse Spyder	1996-98	Non Turbo	F4A23-1
Endeavor	2004-On	V6, 3.8L	F4A5A
Endeavor	2004-On	V6, 3.8L AWD	W4A5A
Expo	1992-95	AWD	F4A33-1
Expo	1992-95	2.4L	F4A23-2
Expo LRV	1992-94	1.8L	F4A22-2
Expo LRV	1992-95	AWD	W4A32-1
Expo LRV	1992-95	2.4L	F4A23-2
Galant	1985-87		KM175-1
Galant	1985-88	2.4L	F4A22-2
Galant	1989-93	2.0L AWD	W4A33-1
Galant	1989-93	2.0L	KM175-5

VEHICLE INDEX

MITSUBISHI

MODEL	YEAR	ENGINE	TRANS
Galant	1994	2.4L DOHC	F4A33-1
Galant	1994-98	2.4L SOHC	F4A23-2
Galant	1995-98	2.5L, V6	A604
Galant	1999-03	V6, 3.0L	F4A51
Galant	1999-03	2.4L	F4A42-2
Galant	2004-On	3.8L	F4A5A
Galant	2004-On	2.4L	F4A4B
Galant GT/Ralliart	2007-On	3.8L	F5A5A
Galant Sigma	1987-88		KM177
Galant Sigma	1989-93		F4A23-2
Lancer	1974-81		A904
Lancer	1988-89		KM170
Lancer	1990-91		F3A21-2
Lancer	2002-03	2.0L	F4A42
Lancer	2004-On	2.0, 2.4L	F4A4B
Lancer	2006-On	2.0L CVT	F1C1
Lancer Evolution MR	2008-On	2.0L Turbo 6 spd.	Twin Clutch Sportronic
Lancer GTS	2009-On	2.4L CVT	Sportronic CVT
Lancer Ralliart	2008-On	TBA	TBA
Mirage	1985-88	1.5L	KM171-1
Mirage	1985-88	1.6L	KM171-2
Mirage	1989-96	1.5L	F3A21-2
Mirage	1993-96	1.8L	F4A22-2
Mirage	1997-02	1.8L	F4A42-1
Mirage	1997-02	1.5L	F4A41-1
Montero	1972-86		A904
Montero	1987-89	4WD	KM148
Montero	1989	4WD	V4AW2
Montero	1990-94	2.6, 3.0L 2WD	AW372L
Montero	1994-00	3.0, 3.5L	AW30-40LE (A340F)
Montero Limited	2001-02	4wd	V5A51-7
Montero Sport	1997-98	3.0L	AW30-40LE (A340F)
Montero Sport	1999-04	3.0, 3.5L	V4A51-5
Montero XLS	2001-02	4WD	V4A51-5
Montero XLS	2003-06	3.8L	V5A51-7
Outlander	2003	L4, 2.4L AWD	W4A42
Outlander	2003	L4, 2.4L	F4A42
Outlander	2004-05	L4, 2.4L AWD	W4A4B
Outlander	2004-05	L4, 2.4L	F4A4B
Outlander	2006	L4, 2.4L AWD	W4A42
Outlander	2006	L4, 2.4L	F4A42
Outlander	2007-On	L4, 3.0L AWD	W6AJA
Outlander	2007-On	L4, 3.0L	F6AJA (JF613E)
Outlander	2008-On	L4, 2.4L CVT	F1C1
Outlander	2008-On	L4, 2.4L AWD CVT	W1C1
Pajero	1989	4WD	V4AW2-7
Pajero	1994-00	4WD	AW30-40LE (A340F)
Pajero	2000-On	4WD	V5A51-7
Pajero Pinin	2000-On	4WD	V4AW4
Pajero Sport	1999-04	4WD	V4A51-5
Pickup	1983-86		A904
Pickup	1987-89	2wd	AW372L
Pickup	1987-89	4wd	KM148
Pickup	1990-97		A500
Precis	1987-89		KM171-1
Precis	1990-95		KM171-5
Raider	2006-On	V6, 4.7L	545RFE
Raider	2006-On	V6, 3.7L	42RLE
Sapporo	1974-81		A904
Sigma 1600, 2000	1977-79		A904
Space Wagon & Chariot	1983-84	1.8, 2.4L	F3A21-2
Space Wagon & Chariot	1984-05	1.8, 2.4L	F3A22
Starion	1984-89		L4N71B

VEHICLE INDEX

MITSUBISHI

MODEL	YEAR	ENGINE	TRANS
Tredia	1983		KM171-1
Tredia	1984-88		KM172
Van/Wagon	1987-90	2wd	AW372L

MORRIS

MODEL	YEAR	ENGINE	TRANS
1100	1968-69	1.1L	MK2
1800, 2200	1967-75	1.8, 2.2L	BW35TA
Ital	1980-84	1.3, 1.7, 2.0L	BW65
Marina	1971	1.3, 1.8L	BW35
Oxford	1975-81	1.6L	BW35

MOTOR HOMES

MODEL	YEAR	ENGINE	TRANS
Lesharo	1983-92		4141
Zimmer	1981-94		4141

NISSAN

MODEL	YEAR	ENGINE	TRANS
180B, 200B, 1600	1972-On		BW35
200SX	1980-83	2.0, 2.2L	L3N71B
200SX	1984-88	1.8, 2.0L	L4N71B
200SX	1987-88	3.0L	E4N71B
200SX	1995-98	1.6L	RL4F03A
200SX	1995-98	2.0L	RE4F03A
240	1972-82		L3N71B
240SX	1989-98		RE4R01A
260	1972-82		L3N71B
280ZX	1980-83		L3N71B
300ZX	1984-89		E4N71B
300ZX	1989-97	Non turbo	RE4R01A
300ZX	1989-97	Turbo	RE4R03A
350ZX	2003-On	V6, 3.5L	RE5R05A
370Z, Fairlady Z	2009-On	V6, 3.7L	JR710E/JR711E
576	1969-71		L3N71B
610	1972-82		L3N71B
Almera	1995-00	1.6, 2.0L	RE4F03A
Altima	1993-99	2.4L	RE4F04A
Altima	2000-04	2.4, 2.5, 3.5L	RE4F04B
Altima	2005-06	3.5L	RE5F22A
Altima	2005-06	2.5L	RE4F04B
Altima	2007-On	2.5L CVT	JF011E (RE0F10A)
Altima	2007-On	3.5L CVT	JF010E (RE0F09B)
Altima Hybrid	2007-On	2.5L CVT	RE0F01H
Armada	2004-On	V8, 5.6L	RE5R05A
Axxess	1990-93		RL4F02A
Bluebird	1972-84	1.6, 1.8, 2.0L	L3N71B
Bluebird	1984-88	1.6, 2.0L	RN3F01A
Bluebird	2007-On		JF011E
Bluebird U11	1984-90	1.6, 2.0L	RE4F03A
Cherry N10	1977-79		L3N71B
Cherry N12	1982-86	1.3, 1.5L	RN3F01A
Cube	2000-06	CVT	RE0F21A
Cube	2007-On	1.8L CVT	TBA
Dualis	2007-On		JF011E
Frontier	1998-04	2.4L	RL4R01A
Frontier	1999-04	3.3L	RE4R01A
Frontier	2005-On	2.5, 4.0L	RE5R05A
GT-R	2008-On	3.8L Twin Turbo	6spd. Dual Clutch
LaFesta	2007-On		JF011E
Laurel	1972-83		L3N71B
Laurel	1986-88		L4N71B

VEHICLE INDEX

NISSAN

MODEL	YEAR	ENGINE	TRANS
Maxima	1980-82		L3N71B
Maxima	1983-84		L4N71B
Maxima	1985-88		RL4F02A
Maxima	1989-94	SOHC	RE4F02A
Maxima	1992-99	DOHC	RE4F04A
Maxima	2000-03	3.0, 3.5L	RE4F04B
Maxima	2007-On	3.5L CVT	JF010E (RE0F09B)
Maxima SE	2004-06	3.5L	RE5F22A
Maxima SL	2004	3.5L	RE4F04A
Micra	1983-91	1.0, 1.2L	RL3F01A
Murano	2003-07	V6, 3.5L CVT	JF010E (RE0F09A)
Murano	2008-On	V6, 3.5L CVT	JF010E (RE0F09B)
NX	1992-93		RL4F03A
Pathfinder, Armada, Terrano	2004-On	4.0L	RE5R05A
Pathfinder, Terrano	1986-87	3.0L, 4WD	L3N71B
Pathfinder, Terrano	1986-89	2,4, 3.0L 2WD	L4N71B
Pathfinder, Terrano	1988-04	3.0, 3.3, 3.5L	RE4R01A
Pathfinder, Terrano	1990-97	2.4L	RL4R01A
Patrol	1990-01	Various	RE4R03A
Patrol	2002-On	Various	RE5R05A
Pickup	1980-85		L3N71B
Pickup	1986-87	4wd	L3N71B
Pickup	1986-89	2WD	L4N71B
Pickup	1988-97	3.0, 3,3L	RE4R01A
Pickup	1990-97	2.4L 2WD 4 Cyl.	RL4R01A
Prairie	1989-91	2.0L	RL4F02A
Presage	2003-On	2.0L	JF010E (RE0F09)
Presage	2003-On	2.5, 3.5L	RE4F04B
Primera	1990-00	1.6, 1.8, 2.0L	RE4F03A
Primera	2001-On	2.0L CVT	RE0F06A
Pulsar	1983-90	1.5, 1.6L	RL3F01A
Pulsar	1988-90	1.8L	RL4F02A
Quest	1983-02	3.0, 3.3L	RE4F04A
Quest S	2005-06	3.5L	RE4F04A
Quest S, SL	2004	3.5L	RE4F04A
Quest S, SL, SE	2007-On	3.5L	RE5F22A
Quest SE	2004	3.5L	RE5F22A
Quest SL, SE	2005-06	3.5L	RE5F22A
Rogue	2007-On	2.5L CVT	JF011E (RE0F10A)
Safari			RE4R03A
Sentra	1982-92	1.5, 1.6, 2.0L	RL3F01A
Sentra	1991-99	1.6, 2.0L	RL4F03A
Sentra	1993-99	2.0L	RE4F03A
Sentra	2000-06	1.8, 2.0L	RE4F03B/W
Sentra SE/R	2005-06	2.5L Turbo	RE5F22A
Sentra SE/R	2000-06	2.5L	RE4F04B
Sentra SE/R	2007-On	2.5, 2.5L CVT	JF011E (RE0F10A)
Serena	2000-06	CVT	RE0F21A
Serena	2007-On		JF011E (RE0F10A)
Silvia Diesel Taxi	1989-91	2.7 Diesel	L4N71B
Silvia Turbo	1984-87	1.8 Turbo	L4N71B
Skyline	1972-82		L3N71B
Skyline	1989-94		RE4R01B
Skyline	1995-98	2.5L	RE5R01A
Stanza	1982-85		RL3F01A
Stanza	1985-89		RL4F02A
Stanza	1990-92		RE4F02A
Sunny	1991-96	2.0L	RE4F03A
Sunny B11	1982-85		RN3F01A
Sylphy	2007-On		JF011E
Teana	2003-On	2.3, 3.5L	RE4F04B
Teana	2007-On		JF011E (RE0F09)
Tiida Saloon, Hatchback	2006-On		RE4F03B

VEHICLE INDEX

NISSAN

MODEL	YEAR	ENGINE	TRANS
Titan	2004-On	V8, 5.6L	RE5R05A
Van	1987-89		L4N71B
Van	1990		RE4R01A
Versa	2007	1.8L CVT	JF009E (RE0F08A)
Versa	2007	1.8L	RE4F03B/W
Violet	1974-82		L3N71B
Xterra	2000-04	3.3L	RE4R01A
Xterra	2005-On	4.0L	RE5R05A

OLDSMOBILE

MODEL	YEAR	ENGINE	TRANS
98	1972-76		TH375
98	1974-80		TH400
98	1977-81		TH200
98	1977-82		TH350
98	1980-83		TH250
98	1985-89		TH440T4
98	1990-96		4T60E
Achieva	1992-96	2.3L	3T40
Achieva	1992-98	3.1L	4T60E
Achieva	1997-98	2.4L	4T60E
Alero	1999-04	2.4, 2.4L	4T40E
Alero	1999-04	3.4L	4T45E
Aurora	1994-03	4.0L	4T80E
Aurora	2001-02	3.5L	4T65E
Bravada	1991-92		4L60
Bravada	1993-04		4L60E
Calais	1985-92		TH125C
Ciera	1982-96	2.5, 2.8L	TH125C
Ciera	1985-89	3.8L	TH440T4
Ciera	1990-91	3.3L	4T60
Ciera	1994-96	3.1L	4T60E
Custom Cruiser	1986-90		TH200-4R
Custom Cruiser	1991-92		4L60
Cutlass	1973		TH375
Cutlass	1973-77		TH400
Cutlass	1973-83		TH350
Cutlass	1978-87		TH200C
Cutlass	1989-89		TH440T4
Cutlass	1990-92	3.1L	4T60
Cutlass	1990-94		3T40
Cutlass	1991-96		TH200-4R
Cutlass	1993-99	3.1L	4T60E
Cutlass Supreme	1991-96	3.4L	4T60E
Delta 88	1984-90		TH440T4
Delta Royale	1991		TH440T4
Delta Royale	1992-96		4T60E
Eighty Eight	1986-92		TH440T4
Eighty Eight	1991-97		4T60E
Eighty Eight	1997	Supercharged	4T65E
Eighty Eight	1998-99		4T65E
Firenza	1982-88		TH125C
Intrigue	1998-02		4T60E
Intrigue	1998-02	Supercharged	4T65E
Omega	1973-79		TH350
Omega	1976-77		TH200
Omega	1980-84		TH125C
Silhouette	1990-95	3.1L	TH125C
Silhouette	1992-98	3.8L	4T60E
Silhouette	1999-04	3.4L	4T65E
Starfire	1975-80		TH350
Starfire	1976-77		TH250
Starfire	1976-86		TH200C

VEHICLE INDEX

OLDSMOBILE

MODEL	YEAR	ENGINE	TRANS
Toronado	1966-78		TH425
Toronado	1979-81		TH325
Toronado	1982-85		TH325-4L
Toronado	1985-90		TH440T4
Toronado	1991-92		4T60E

OPEL

MODEL	YEAR	ENGINE	TRANS
405	1989-91		ZF4HP14
504	1975-84		ZF3HP22
505	1980-86	2.0L 2.3L	ZF3HP22
505	1984-91	2.2L L4	ZF4HP22
604	1977-79	2.7L, 2.8L	TH180
604	1982-85	2.3L	ZF3HP22
Ascona	1969-82	1.6, 1.9, 2.0 Diesel	TH180
Ascona	1981-On		TH125C
Ascona C	1981-89	1.3, 1.6, 1.6LD, 1.8L	TH125C
Astra	1992-98	1.4, 1.6L	AW60-40LE
Astra	1992-98	1.8, 2.0L	AW50-40LE
Astra-G & Zafira	1998-On	1.8L	AW60-42LE
Astra-G & Zafira	1998-On	2.0, 2.0LTD, 2.2L	AW50-42LE
Astra-G & Zafira	1998-On	1.4, 1.6L	AW60-40LE
Calibra	1989-97	2.0, 2.5L	AW50-40LE
Commodore	1967-83	2.2, 2.5, 2.8L	TH180
Corsa-B & Tigra	1993-01		AW60-40LE
Corsa-C	2001-06	1.0, 1.2L	Easytronic
Corsa-C	2001-06	1.4L	AW60-40LE
Corsa-D	2006-On	1.3, 1.7L	TBA
Frontera-B	1996-05		4L30E
Kadette	1967-73	1.2L	TH180
Kadette	1976-79		TH200
Kadette	1981-93	1.3, 1.4, 1.6, 1.6LD, 1.8, 2.0L	TH125C
Manta	1971-75	1.6, 1.9L	TH125C
Manta	1975-81	1.9, 2.0L	TH180
Manta	1986-On		AW03-71
Manta 1800S	1981-87	1.8L	TH180
Manta Diesel	1978-82	2.0L Diesel	TH180
Monteray	1992-97		4L30E
Monteray	1998-00	3.5L Petrol	4L30E
Monza	1978-84	3.0L	TH180
Monza	1984-On	2.2, 2.3LD, 2.5, 3.0L	AW03-71
Olympia	1979-84		TH180
Omega-A	1987-93	2.0, 2.4, 2.6, 3.0L	4L30E
Omega-A	1987-93	1.8, 2.3LTD, 2.0L	AW03-72LE
Omega-B	1994-On	2.5LTD	5L40E
Omega-B	1994-On	2.2, 2.6, 3.2L	4L30E
Rekord	1967-72	1.7L	TH180
Rekord	1982-86	1.8, 2.0L	TH180
Rekord 2	1972-78	1.9, 2.0L	TH180
Rekord 3	1978-82	2.0L	TH180
Rekord Diesel	1978-On	2.1, 2.3L	TH180
Saturn	2004-06		AW55-50SN
Senator	1978-84	2.0, 2.2, 2.8, 3.0L	TH180
Senator/Monza/GSA	1984-On		AW71
Senator-B	1988-94	2.5, 3.0L	AW03-72LE
Senator-B	1988-94	2.6, 3.0L	4L30E
Signum	2004-06		AW55-50SN
Sintra	1997-99	3.0L	AW50-42LE
Station Wagon - 4dr	1979-83		ZF3HP12
Vectra	2007-On		AM6, TF-80SC
Vectra-A	1989-95	1.6, 1.8, 2.0, 2.5L	AW50-40LE
Vectra-B	1996-01	1.6L	AW60-40LE

VEHICLE INDEX

OPEL

MODEL	YEAR	ENGINE	TRANS
Vectra-B	1996-01	X18XE, Z18XE, Z18XEL	AW60-42LE
Vectra-B	1996-01	X18XE, 2.0, 2.5L	AW50-42LE
Vectra-C	2002-On	2.2, 2.2LTD, 3.2L	AW55-50SN
Zafira	2007-On		AM6, TF-80SC

PERODUA

MODEL	YEAR	ENGINE	TRANS
Kembara	2002-On	1.3L	A4LB-1

PEUGEOT

MODEL	YEAR	ENGINE	TRANS
106	1996-On		MB3
205	1983-95	1.1, 1.4, 1.6, 1.8LD	ZF4HP14Q
206	1998-On		DPO
305	1985-91	1.3, 1.5, 1.9LD	ZF4HP14Q
306	1993-01	1.8, 2.0L	ZF4HP14Q
306	1993-98		MB3
307	2005-On	1.4, 1.6, 2.0L	AM6, TF-80SC
309	1987-96	1.9L	ZF4HP14Q
404	1967-81		ZF3HP12
405	1987-97	1.6, 1.8, 1.9L	ZF4HP14Q
406	1995-99	2.0, 2.2, 2.9L	ZF4HP20
406	1998-On		AL-4 (DPO)
407	2004-On	1.7 - 2.9L	AL-4 (DPO)
407	2007-On		AM6, TF-80SC
504	1969-76	1.8, 2.0L	ZF3HP12
504	1975-83		ZF3HP22
505	1978-86		ZF3HP22
505	1987-96	2.0, 2.2, 2.5L	ZF4HP22
604	1975-79		TH180
604	1979-83		ZF3HP22
604	1982-89	2.5L	ZF4HP22
605	1989-99	2.0, 2.1D, 2.1TD, 3.0L	ZF4HP18Q
605	1997-99	3.0L	ZF4HP20
607	1999-03	2.2, 2.9L	ZF4HP20
607	2004-On	2.7L	AM6, TF-80SC
Sedan Station Wagon	1979-83		ZF3HP12

PLYMOUTH

MODEL	YEAR	ENGINE	TRANS
Acclaim	1989-95		A470
Acclaim	1989-95		A604
Arrow	1976-80		TF6/904
Barracuda	1965-74		TF8/727
Barracuda	1965-74		TF6/904
Breeze	1996-00	2.0, 2.4L	A604
Caravelle	1985-88		A470
Champ	1980-82		KM170
Cricket	1971-72		BWT35
Fury	1974-78		TF8/727
Fury	1974-78		TF6/904
Gran Fury	1975-83		TF8/727
Gran Fury	1975-88		TF6/904
Gran Fury	1989-89		A999
Horizon	1978-81		A404
Horizon	1982-90		A470
Laser	1984-86		A413
Laser	1990-94	1.8, 2.0L Non turbo 2WD	F4A22-2
Laser	1991-94	2.0 Turbo	F4A33-1
Laser	1992-94	2.0L AWD	W4A33-1
Neon	1995-01	2.0, 2.5L	A670
Neon	2000-05		A604

VEHICLE INDEX

PLYMOUTH

MODEL	YEAR	ENGINE	TRANS
Prowler	1997-02	3.5L	A606
Reliant	1981-89		A470
Sapporo	1978-83		TF6/904
Satellite	1974		TF6/904
Satellite	1974		TF8/727
Sundance	1987-92		A470
Sundance	1993-94		A604
Trailduster	1974-81		TF8/727
Valiant	1965-76		TF6/904
Valiant	1970-76		TF8/727
Volare'	1976-80		TF6/904
Volare'	1976-81		TF8/727
Voyager	1984-01	2.4L	A470
Voyager	1987-01	3.0L	A670
Voyager/Grand Voyager	1991-03	3.3, 3.8L	A604 (41TE)

PONTIAC

MODEL	YEAR	ENGINE	TRANS
6000	1982-91	2.5L	TH125C
6000	1990-91	3.1	4T60
Aztek, GT, Rally	2001-05		4T65E
Bonneville	1974-77		TH400
Bonneville	1974-83		TH350
Bonneville	1977-86		TH200C
Bonneville	1987-91		TH440T4
Bonneville	1992-97		4T60E
Bonneville	1997-05	3.8, 3.8SC	4T65E
Bonneville	2004-06	4.6L	4T80E
Catalina	1974-77		TH400
Catalina	1974-80		TH350
Catalina	1977-81		TH200C
Fiero	1984-88		TH125C
Firebird	1967-76		TH400
Firebird	1969-81		TH350
Firebird	1980-83		TH200C
Firebird	1983-93		TH700R4
Firebird	1994-02		4L60E
G5	2007-On	2.2, 2.4L	4T45E
G6	2005-On	2.4, 3.5L	4T45E
G6	2009-On	2.4L	6T40
G6, GT	2006-On	3.9L	4T65E
G6, GT	2007-On	3.6L	6T70
G8	2007-On	3.6L	5L40E
G8 GT, ST	2007-On	6.0L	6L80E
G8 GXP	2009-On	6.2L	6L80E
Grand Am	1985-96		TH125C
Grand Am	1994-98		4T60E
Grand Am	1999-04	2.2, 2.4L	4T40E
Grand Am	2000-05	3.1, 3.8, 5.3L	4T45E
Grand Prix	1969-77		TH400
Grand Prix	1976-83		TH350
Grand Prix	1977-87		TH200C
Grand Prix	1980-84		TH250
Grand Prix	1981-87	Turbo HO	TH200-4R
Grand Prix	1988-92		4T60
Grand Prix	1990-92	2.3L	TH125C
Grand Prix	1998-99	3.1L	4T60E
Grand Prix, GT, GTP	1999-On	All	4T65E
GTO	2004	V8, 5.7L	4L60E
GTO	2005-On	V8, 6.0L	4L65E
J2000 (Import)	1982-88		TH125C
LeMans	1972-77		TH400

VEHICLE INDEX

PONTIAC

MODEL	YEAR	ENGINE	TRANS
LeMans	1972-81		TH350
LeMans	1978-81		TH200C
LeMans	1988-93		TH125C
Montana	1999-05		4T65E
Montana, SV6	2005-On		4T65E
Parisienne	1983-86		TH200C
Parisienne	1983-89		TH200-4R
Parisienne	1984-88		TH700R4
Phoenix	1977-79		TH200C
Phoenix	1977-79		TH350
Phoenix	1980-84		TH125C
Pursuit	2006-On	2.2, 2.4L	4T45E
Safari	1987-89		TH700R4
Solstice, GXP	2006-On	2.0L Turbo, 2.2, 2.4L	5L40E
Sunbird	1976-77		TH250
Sunbird	1985-94		TH125C
Sunfire	1995-01	2.2L	3T40
Sunfire	1995-05	2.3L & 2.4L	4T40E
T1000	1981-87		TH180C
Tempest	1965-69		ST300
Tempest	1967-71		TH400
Tempest	1969-71		TH350
Torrent	2006-On	V6, 3.4L	AF33-5
Torrent, GXP	2008-On	3.6L	6T70
TransSport	1990-96		3T40
TransSport	1992-98		4T60E
Ventura	1971-77		TH350
Ventura	1976-77		TH200
Vibe	2003-06	L4, 1.8L AWD	U341F
Vibe	2009-On	1.8, 2.4L 4 spd.	TBA
Wave	2004-06	L4, 1.6L	81-40LE (ML4)
Vibe GT	2009-On	2.4L 5 spd.	TBA

PORSCHE

MODEL	YEAR	ENGINE	TRANS
911 Carrera	1998-03		ZF5HP19HL
911 Carrera 4, 4S	1999-03		ZF5HP19HLA
911 Carrera S	2009-On	3.8L	PDK 7 spd. Dual Clutch
911 Carrera II	1989-93	3.6L	ZF4HP22HL
911 Targa	2002-03		ZF5HP19HL
924	1976-88		010
928, S & S4	1978-82		722.1
928, S & S4	1983-05		722.3
928S4, GTS	1991-95		ZF4HP24HL
944	1982-91		010
944	1991-94	3.0L	ZF4HP18FLE
968	1992-95		ZF4HP18FLE
986 Boxster	1996-03	2.5L	ZF5HP19FL
993	1993-98	3.6L	ZF4HP22HL
996	1997-04	3.4, 3.6L	ZF5HP19HL
Caymen	2006-08	2.7, 3.4L	Triptronic 5 Sp
Caymen	2009-On	2.9L	PDK 7 spd. Dual Clutch
Caymen S	2009-On	3.4L	PDK 7 spd. Dual Clutch
Cayenne	2002-06	3.2, 4.5L	ZF6HP26
Cayenne Turbo S	2008-On	4.8L Twin turbo	TR-60SN
Panamera	2010-On	3.6, 4.8L	PDK 7 spd. Dual Clutch
Panamera Hybrid	2010-On	3.6L	6 spd. Tiptronic
Roxster	2011-On		TBA

PROTON

MODEL	YEAR	ENGINE	TRANS
1500	1989-96	1.5L	KM170

VEHICLE INDEX

PROTON

MODEL	YEAR	ENGINE	TRANS
Perdana	1999-On	SOHC	F4A22
Perdana	1999-On	DOHC	F4A23
Personna	1993-On	1.6L	KM175
Personna	1993-On	1.5L	KM170
Satria	1999-On	1.5L	F3A21
Waja	2000-On		F4A23
Wira	1999-On	1.5L	F3A21

RANGE ROVER

MODEL	YEAR	ENGINE	TRANS
3.5	1988-On		ZF4HP22
4.0, 4.6	1987-95		ZF4HP22
w/3 Speed	1983-87		A727
w/4Speed	1985-On		ZF4HP22

RELIANT

MODEL	YEAR	ENGINE	TRANS
Scimitar GTE	1968-73	V6, 3.0L	BW35
Scimitar GTE	1973-74	V6, 3.0L	C4
Scimitar GTE	1974-80	V6, 3.0L	C3
Scimitar GTE	1980-82	V6, 2.8L	C3

RENAULT

MODEL	YEAR	ENGINE	TRANS
5	1978-85		4139
5	1982-90		MB1
9	1981-90	1.4L	MB1
11	1983-88		MB1
12	1974-78	1.3L	4139
15	1974-78	1.6L	4139
16	1974-79	1.6L	4139
17	1975-79	1.6L	4139
18	1979-82	1.6L	4139
18 1647	1982-86	1.6, 2.0L	MJ1/MJ3
19	1989-95	1.8L	AR4
19	1989-95	1.4, 1.7, 1.9TD	MB1
20 1647	1977-81	1.6L	4139
20 1995	1976-81	2.0L	4141
20 1995	1981-83	2.0L	MJ3
21	1988-95	2.2L	AD4
21	1991-94	1.7, 2.0L	AD4
25	1988-92	2.8L	AR4
25 1995, 2155	1982-88	2.0, 2.2L	MJ3
25 1995cc	1988-92	2.0L	AR4
25 2665cc	1984-88	2.7L	4141
25 2665cc	1988-90	2.7L	AR4
30 2665cc	1975-84	2.7L	4141
Alliance	1983-05		MB1
Avantime	2001-03	3.0L	AM6, TF-80SC
Clio	1990		MB3
Clio	1991-97		AD4
Clio	1998-01		DPO
Dodge Bus	All		A727
Encore	1983-05		MB1
Espace II	1991-97	2.2, 2.8L	AR4
Espace III	1998-03	Diesel	ZF4HP20
Espace IV	2004-06		AW55-50SN
Espace IV	2006-On		AM6, TF-80SC
Fuego	1984-05		MB1
Fuego R18i Sportswagon	1980-83		4139
Fuego, Sportswagon	1984-05		MJ3
Laguna	1994-97		AD4

VEHICLE INDEX

RENAULT

MODEL	YEAR	ENGINE	TRANS
Laguna	1998-03	3.0L	ZF4HP20
Laguna	1998-03	1.6, 1.8, 1.9L TD	DPO
Laguna V6	1994-On	V6	AD8
Le Car	1981-83		MB1
Matra	1998-00	3.0L	ZF4HP20
Medallion	1988-89		MJ3
Megane Classic	1997-On		AD4
Megane Scenic	1997-On		AD4
Safrane	1992-97		AD8
Safrane MK2	1996-On		AW50-40LE
Savanna	All		AW50-40LE
Scenic	1997-On	1.6, 1.8, 1.9L TD	DPO
Sportswagon	1984-86		MJ3
Traffic	1981-89		ML1
Twingo	1993-On		TBA
V8	1979-82		4139
Vel Satis	2002-05	3.0L, V6	AW55-50SN
Vel Satis	2006-On	V6, 3.0L	AM6, TF-80SC
X56	1997-05		ZF4HP20

RILEY

MODEL	YEAR	ENGINE	TRANS
1300	1967-73	1.3L	MK2
4/72	1965-69	1.6L	BW35
Elf	1967-69	1.0L	MK2
Kestrel	1965-69	1.1L	MK2

ROLLS ROYCE

MODEL	YEAR	ENGINE	TRANS
Bentley	1967-On		TH400
Bentley P6000B	1998-99		ZF5HP30
Carnargue	1975-On	V8, 6.75L	TH400
Corniche	1967-87		TH400
Corniche	2000-On		4L80E
Ghost Sedan	2010-On	6.6L	ZF8HP70
Phantom	1959-67	V12, 6.75L	Hydramatic
Phantom	2003-On	V12, 6.75L	ZF6HP32
Phantom Drophead Coupe	2007-On		ZF6HP32
Phantom IV	1959-67		Hydramatic
Rolls Royce	1991-On		4L80E
Silver Cloud	1959-67		Hydramatic
Silver Dawn	1996-On		4L80E
Silver Seraph	1998-03	V12, 5.4L	ZF5HP30
Silver Shadow	1959-67		Hydramatic
Silver Shadow	1968-90		TH400
Silver Spirit	1980-90		TH400
Silver Spirit, Silver Spur	1992-98		4L80E
Silver Spur	1968-90		TH400
T Series	1968-72		TH400
Turbo Coupe	1991-92		4L80E

ROVER

MODEL	YEAR	ENGINE	TRANS
2000 SD1	1982-84	2.3L	BW65
2000 SD1	1984-86	2.0L	TH180
2000, 2200	1966-77		BW35
213	To 85		3 Speed
214 / 248	1987-On		ZF4HP18
216	1985-89	1.6L	ZF4HP14
216	1989-On	1.6L	Honda L4, MPPA
2300 SD1	1977-84	2.3L	BW65
2300 SD1, 2600 SD1	1984-87	2.3, 2.6L	TH180

VEHICLE INDEX

ROVER

MODEL	YEAR	ENGINE	TRANS
2300, 2600	To 84		TH180
248	To 85		ZF4HP14
2600 SD1	1977-84		BW65
3 Liter MK2	1965-67		BW8/12
3 Liter MK3, P5	1965-67		BW35
3.5 Liter P5B, P6B	1967-73		BW35
3500 SD1	1976-83	3.5L	BW65
3500, P5B, P6B	1967-76		BW35
416	1989-95	1.6L	Honda L4, MPPA
416	1996-98	1.6L CVT	Van Doorne CVT
45	1999-05	CVT	ZF CVT
600	1993-99	2.0, 2.3L	Honda MP6A
75	2000-05	3.2L	JF506E
820	1986-98	2.0L	ZF4HP14
825	1986-88	2.5L	G4
825 V6 Quad Cam	1999-On	2.5L	JF403E
827	1988-98	2.7L	G4
Vitesse & Van Den Plas	1983-86		TH180

SAAB

MODEL	YEAR	ENGINE	TRANS
900	1979-93		BW37TB
9000, 9000S, 9001, 9002	1986-On	2.0, 2.6, 3.0L & Turbo	ZF4HP18Q
9000S GAT410	1987-05		ZF4HP14
9-2	2005-On	2.0, 2.5L	AW50-42LE
9-3	1998-03	2.0, 2.3L	AW50-42LE
9-3	2003-On	2.0L Turbo 2WD	AW55-50SN
9-3	2003-06	2.0, 2.8L	AW55-50SN
9-3	2006-On	2.8L Turbo	AWF21, AF40, TF-80SC
9-4X	2010-On	2.0L TC 6 Spd.	TBA
9-5	1998-01	2.3, 3.0L	AW50-42LE
9-5	2002-09	2.3, 3.0L	AW55-50SN
9-5	2010-On	6 spd.	TBA
9-7, 9-7X	2005-On	4.2, 5.3L	4L60E
9-7X	2007-On	6.0L	4L70E
99	1969-80		BW35TB
99EA, 99LEA4, 900	1969-80		BW35TB

SATURN

MODEL	YEAR	ENGINE	TRANS
Astra, XR, XE	2008-On	1.8L	AW-AF17-4
Aura Hybrid	2007-On	L4, 2.4L	4T45E
Aura	2009-On	L4, 2.4L	6T40
Aura XE	2007-On	V6, 3.5L	4T45E
Aura XR	2007-On	V6, 3.6L	6T70
Ion	2005-On	2.2, 2.4L	4T45E
Ion Quad Coupe	2003-04	2.2L CVT	VT25E (VTi)
Ion Sedan	2003-04	2.2L	AF23-5
LS100, LS200	2000-04	2.5L	4T40E
LS100, LS200	2000-05	2.2L	4T45E
Outlook	2007-On	V6, 3.6L	6T75
Relay	2005-On	3.5, 3.9L	4T65E
Sky, Sky Redline	2007-On	2.0,2.4L	5L40E
SL1, SL2, SC2	1992-02		TAAT
Vue	2002-03	5 SP V6, 3.0L	AF33-5
Vue	2002-05	CVT L4, 2.2L	VT25E
Vue	2004-07	V6, 3.5L AWD	Honda MDPA
Vue	2004-07	V6, 3.5L	Honda MDRA
Vue	2005-On	L4, 2.2, 2.4L	4T45E
Vue Hybrid	2007-On	L4, 2.2, 2.4L	4T45E
Vue Hybrid	2009-On	3.6L	FWD 2-Mode Hybrid
Vue, Redline, XR, XE	2008-On	3.5, 3.6L	6T70

VEHICLE INDEX

SEAT

MODEL	YEAR	ENGINE	TRANS
Alhambra	1996-00		01P
Alhambra	2000-On		JF506E
Altea	2004-On		Triptronic 5 Sp
Altea	2004-On		09G (TF-60SN)
Arosa	1998-On	1.4L	JF404E
Leon	2005-On	1.4, 1.6, 2.0L	09G (TF-60SN)
Toledo	1991-99	1.6, 1.9, 2.0L	096
Toledo	1999-04	1.6, 1.8, 1.9, 2.3L	01M
Toledo	2004-On	1.6, 1.9, 2.0L	09G (TF-60SN)

SSANG YONG

MODEL	YEAR	ENGINE	TRANS
Chairman	2000-On		722.6
Chairman	2000-On		BTR74
Korando	1997-99	2.3L	BTR M74LE
Musso	1995-On	3.2L	BTR M74LE
Musso	1995-On	2.9L TD	722.3

STERLING

MODEL	YEAR	ENGINE	TRANS
825	1987-88		L5
827	1988-91		L5

STUDEBAKER

MODEL	YEAR	ENGINE	TRANS
All	1962-65		BW35

SUBARU

MODEL	YEAR	ENGINE	TRANS
1400, 1600, 1800	1975-05		M41A
B9 Tribeca	2006-On	H6, 3.0, 3.6L	5EAT
Baja	2003-06	H4, 2.5L	4EAT
Brat	1983-85		M41A
Forester	1997-On	H4, 2.4L AWD	4EAT
Forester 2.5X, XT Limited	2009-On	F4. 2.5L, 2.5L TC	4EAT
GF	1976-79		M41A
GL	1983-89		M41A
GL	1988-89		R4AXEL
Impreza	1993-97	1.8, 2.2, 2.5L	R4AXEL
Impreza, WRX	1998-On	1.8, 2.0, 2.2, 2.5L	4EAT
Justy	1990-94	L3, 1.2L	ECVT
Legacy	1990-On	2.0, 2.2, 2.5L	R4AXEL
Legacy GT	2005-On	2.5, 3.0L	5EAT
Loyale	1985-94	1.8L With or Without turbo	M41A
Loyale	1988-90	1.8L Turbo	R4AXEL
Outback, 2.5i, Sport	1998-On	2.5, 3.0L	4EAT
Outback 2.5XT, 3.0R	2005-On		5EAT
Outback Sport	2005-On		4EAT
Station Wagon	1987-05		R4AXEL
SVX	1992-97	3.0, 3.3L	R4AXEL
XT	1985-87		M41A
XT	1987-91	1.8, 2.7L	R4AXEL
XT6	1987-91		R4AXEL

SUZUKI

MODEL	YEAR	ENGINE	TRANS
.66 L	1999-On	600cc	JF302E
Aerio	2002-03	2.0L	AW60-40LE
Aerio	2004-On	2.3L	AW50-42LE
Alto	1986-92	0.8L	Suzuki 2 Sp
Alto	1997-On	1.1L	MX17

VEHICLE INDEX

SUZUKI

MODEL	YEAR	ENGINE	TRANS
Cervo	1999-On	1.0L	JF405E
Equator	2009-On	2.5, 4.0L	RE5R05A
Esteem	1995-02	1.6, 1.8L	AW60-40LE
Forenza	2004-On	L4, 2.0L	ZF4HP16
Grand Vitara	1999-05	1.6, 2.0, 2.5L	A44DE
Grand Vitara	2006-On	V6, 2.7L	A750E/A750F
Kei	1999-On		JF405E
Landy	2007-On	CVT	JF011E
MR Wagon	1999-On	1.0L	JF405E
Reno	2004-On	2.0L	ZF4HP16
Sidekick 2 Door	1989-98		TH180C
Sidekick 4 Door	1992-98		A44DE
Sidekick Sport	1996-98		A44DE
Swift GTI	1989-01	1.3L	MX17
Swift	2001-On	1.3L	TBA
SX4, Sport	2007-On	2.0L	AW81-40LE
Verona	2004-06	L4, 2.5L	ZF4HP16
Wagon R	1999-On	1.0L	JF405E
Wagon R	1999-On		SR410, 412, 413
X90	1996-98	1.6L	A44DE
XL7	2001-03	V6, 2.7L	A44DE
XL7	2004-On	2.7, 3.6L	AF33-5

TALBOT

MODEL	YEAR	ENGINE	TRANS
Alpine	1969-73		BW35
Alpine	1973-76		BW45
Alpine SX	1980-82	1.6L	A404
Avenger	1970-73	1.5L	BW35
Avenger	1973-82		BW45
Chrysler 180 & 200	1973-80	1.8, 2.0O	A904
Commer PB	1968-75		BW35
Horizon SX	1979-85	1.3, 1.6L	A404
Humber Sceptre	1965-73	1.5, 1.7L	BW35
Humber Snipe, Imperial, Hawk	1964-67		BW35
Hunter & Minx	1966-73		BW35
Hunter & Sceptre	1973-78		BW45
Minx & Rapier	1984-On		A404
Minx & Super Minx	1963-67	1.5, 1.7L	BW35
PB Petrol Van	1976-On	1.7L	BW65
Simca 1301, 1501	1966-76	1.3, 1.5L	BW35
Singer Gazelle	1964-70	1.5, 1.7L	BW35
Singer Vouge	1967-70	1.5, 1.7L	BW35
Solara	1980-84	1.5L	A404
Sunbeam	1977-82	1.3, 1.6L	BW45
Sunbeam Alpine	1964-68		BW35
Sunbeam Alpine Soupe	1969-73		BW35
Sunbeam Rapier	1967-73	1.7L	BW35
Sunbeam Rapier	1973-76		BW45
Tagora	1980-84	2.2, 2.3L TD, 2.7L	ZF3HP22
Walk throu Diesel Van	1968-73		BW35

TOYOTA

MODEL	YEAR	ENGINE	TRANS
4 Runner	1985-94	4WD	A340H
4 Runner	1989-04	2.4, 2.7, 3.0, 3.4, 4.0L	A340E
4 Runner	1989-91	2.4L, L4	A44D
4 Runner	1996-04	4WD	A340F
4 Runner	2003-On	4.0, 4.7l	A750E/A750F
Aurion	2006-On	V6, 3.5L	U660E
Avalon	1995-05	V6, 3.0L	A541E
Avalon	2006-07	V6, 3.5L	U151E

VEHICLE INDEX

TOYOTA

MODEL	YEAR	ENGINE	TRANS
Avalon	2008-On	V6, 3.5L	U660E
Cami	2002-On	1.3L	A4LB-1
Camry	1983-01	4 cyl.	A140E
Camry	1985-86	4 cyl.	A140L
Camry	1988-93	2.5, 3.0L	A540E
Camry	1989-91	V6, 3.0L AWD	A540H
Camry	1994-01	V6, 3.0L	A541E
Camry	2002	V6, 3.0L	U140
Camry	2002-03	2.4L	U241E
Camry	2003-06	2.4, 3.0L	U151E
Camry	2004-06	3.3L	U151F
Camry	2005-On	2.4L	U250E
Camry	2007-On	V6, 3.5L	U660E
Camry HV Hybrid	2007-On	2.4L CVT	P311
Carina	1969-74		A20
Carina	1970-78		A30
Carina	1973-78		A40
Celica	1968-76		A30
Celica	1980		A40
Celica	1981-85		A40D
Celica	1985-89	ST, GT	A140L
Celica	1986	GTS	A140E
Celica	1990-91	2.2L, GT	A241L
Celica	1990-93	1.6L	A243L
Celica	1990-93	2.2L	A241E
Celica	1994-99	2.2L	A246E
Celica	1994-99	1.8L	A140E
Celica	2000-05	GT	U341E
Celica	2000-05	GTS	U240E
Celsior	1997-On		A650E
Corolla	1968-74		A20
Corolla	1968-76		A30
Corolla	1980-81		A40
Corolla	1982-83		A41
Corolla	1982-83		A40D
Corolla	1984-01	1.6L, Carb	A131L
Corolla	1984-85	Diesel	A130L
Corolla	1984-87	1.6L, F.I.	A42DL
Corolla	1985-92		A240L
Corolla	1987-89		A240E
Corolla	1990-92	AWD	A241H
Corolla	1993-08	1.8L	A245E
Corolla	2009-On	2.4L	A250E
Corolla	2009-On	1.8L	U340E
Corona	1965-70		A10
Corona	1970-74		A20
Cressida	1978-80		A40D
Cressida	1981		A43D
Cressida	1982		A43DL
Cressida	1983-86		A43DE
Cressida	1987-92	2.8, 3.0L	A340E
Crown	1965-70		A10
Crown	1966-73		A30
Crown	1973-78		A40
Crown	2004-On	V6, 3.0L	A760E
Echo	2000-05	L4, 1.5L	U340E
F J Cruiser	2006-On	V6, 4.0L AWD	A750F
F J Cruiser	2006-On	V6, 4.0L	A750E
FX16	1987-89	1.6L	A131L
FX16	1987-89	1.6L	A240E
Harrier Hybrid	2005-On	V6, 3.3L CVT	P310/HSD
Hi-Ace	All	3.0L TD	A440E
Highlander	2001-03	2.4, 3.0L 4WD	U140F

VEHICLE INDEX

TOYOTA

MODEL	YEAR	ENGINE	TRANS
Highlander	2001-03	3.0L 2WD	U140E
Highlander	2001-07	2.4L 2WD	U241E
Highlander	2004-07	2.4 L 4WD	U151F
Highlander	2004-07	2.4 L 2WD	U151E
Highlander	2004-08	3.3, 3.5L	U151E
Highlander	2004-08	3.3, 3.5L AWD	U151F
Highlander	2008-On	3.5L	U660E
Highlander Hybrid	2005-On	3.3L CVT	P310, Q211
Hi-Lux Truck	1966-73		A30
Hi-Lux Truck	1973-80		A40
iQ	2009-On	1.0L DOHC	CVT
Landcruiser	1986-92	4.0, 4.2L	A440F
Landcruiser	1993-95	4.5L	A442F
Landcruiser	1996-02	4.5, 4.7L	A343F
Landcruiser	2003-07	4.7L	A750F
Landcruiser	2008-On	5.7L	AB60F
Mark II	1966-73		A30
Mark X	2004-On	2.5, 3.0L	TB0-65SN
Matrix	2002-06	1.8L (WTL-I Eng. 180Hp)	U240E
Matrix	2002-08	1.8L (WT-I Eng. 130HP)	A246E
Matrix	2003-06	1.8L AWD	U341F
Matrix	2009-On	2.4L	U140F
Matrix	2009-On	1.8L	U341E
Matrix	2009-On	2.4L	U250E
MR2	1986		A141E
MR2	1987-88		A240E
MR2	1988-89	1.6L SC	A241E
MR2	1988-95		A241E
Paseo	1992-99		A244E
Paseo	2006-On		U540E
Pickup	1978-80	2.2L	A40
Pickup	1981	2.4L	A43
Pickup	1981-83		A40D
Pickup	1982-84	2.4L	A43D
Pickup	1985-89	2.4L	A340E
Pickup	1990-94	2.4L	A340F
Porte	2004-On		80-40LS
Previa	1991-97	2.4L w/o SC	A46DE
Previa	1991-97	2.4L w/o SC 4WD	A46DF
Previa	1993-97	2.4L 4WD	A340F
Previa	1993-97	2.4L Supercharged	A340E
Prius	2002-On	1.5L CVT	P112
Ractis	2005-On	1.3, 1.5L CVT	XA-10LN
RAV4	1996-97	2WD	A241E
RAV4	1996-99	4WD	A540H
RAV4	1998-99	2WD	A247E
RAV4	2000-06	4WD	U140F
RAV4	2000-06	2WD	U241E
RAV4	2007-On	2.4, 3.5L 4WD	U151F
RAV4	2007-On	2.4, 3.5L 2WD	U151E
Reiz	2005-On	V6, 3.0L	A760E
Reiz	2005-On	V6, 2.5L	A960E
Rush	2006-On	1.5L	A4LB-1
Scion tc	2004-On	2.4L	U241E
Scion xA, xB	2004-07	1.5L	U340E
Scion xB	2008-On	2.4L	TBA
Scion xD	2008-On	1.8L	U341E
Sequoia	2001-04	4.7L 4WD	A340F
Sequoia	2001-04	4.7L	A343E
Sequoia	2005-07	4.7L 4WD	A750F
Sequoia	2005-07	4.7L	A750E
Sequoia	2008-On	5.7L 4WD	AB60F
Sequoia	2008-On	5.7L 2WD	AB60E

VEHICLE INDEX

TOYOTA

MODEL	YEAR	ENGINE	TRANS
Sienna	1998-00	3.0L	A540E
Sienna	2001-03	3.0L	A541E
Sienna	2004-On	3.3L 2WD	U151E
Sienna	2004-On	3.3L 4WD	U151F
Solara	1998-01	2.2L, 4 cyl.	A140E
Solara	1998-03	3.0L, V6	A541E
Solara	2002-05	2.4L	U241E
Solara	2004-06	3.3L 4WD	A540E
Solara	2004-On	2.4, 3.3L	U151E
Solara	2006-On	2.4L	U250E
Space Cruiser Model F	1985-On		A42D
Starlet	1982-85	1.3L	A41
Supra	1977-80		A40D
Supra	1981		A43D
Supra	1982		A43DL
Supra	1983-85		A43DE
Supra	1986-98	3.0L w/o Turbo	A340E
Supra	1993-98	Twin Turbo	A341E
T100	1993-98	2WD	A340F
T100	1993-98	4WD	A340E
Tacoma	1985-04	2.4L 2WD	A43D
Tacoma	1989-04	2.7, 3.0, 3.4L 2WD	A340E
Tacoma	1995-04	4WD	A340F
Tacoma	2005-On	2.7L	A340E
Tacoma	2005-On	4.0L 4WD	A750F
Tacoma	2005-On	4.0L 2WD	A750E
Tercel	1979-86	2WD	A55
Tercel	1983-88	4WD	A55F
Tercel	1987	3A-C Engine	A55
Tercel	1987	3E Engine	A132L
Tercel	1987-99		A132L
Tercel	1995-99		A242L
Tundra	2000-04	3.4, 4.7L	A340E
Tundra	2000-04	3.4, 4.7L 4WD	A340F
Tundra	2005-09	4.0, 4.7L	A750E
Tundra	2005-09	4.7L 4WD	A750F
Tundra	2008-On	5.7L 4WD	AB60F
Tundra	2008-On	5.7L 2WD	AB60E
Tundra	2010-On	4.6L 2WD	AB60E
Tundra	2010-On	4.6L 4WD	AB60F
Van	1987-89	4WD	A45DF
Van	1987-89		A45DL
Van	1984-86		A44DL
Venza	2008-On	2.7, 3.5L	TBA
Vios	2002-On	L4, 1.4L	U540E
Yaris	2006-On	1.5L	U340E

TRIUMPH

MODEL	YEAR	ENGINE	TRANS
1500, 1725 P.B. Gas	1973-76		BW65
1500, 185D, 2000	1973-80		BW65
Acclaim	1981		TH180
Stag	1970-74		BW35
Stag, Dolomite	1974-77		BW65
TR7, 2000, 2500	1974-80		BW35
TR7, TR8, Dolomite	1981		BW66

VAUXHALL

MODEL	YEAR	ENGINE	TRANS
Astra	1985-93	1.3, 1.6, 1.8L	TH125C
Astra	1992-98	1.8, 2.0L	AW50-40LE
Astra	1992-98	1.4, 1.6L	AW60-40LE

VEHICLE INDEX

VAUXHALL

MODEL	YEAR	ENGINE	TRANS
Astra & Fafira	1998-On	2.0, 2.2L	AW50-42LE
Astra & Fafira	1998-On	1.8L	AW60-42LE
Astra & Fafira	1998-On	1.4, 1.6L	AW60-40LE
Bedford CF Van	1970-82	1.8, 2.3, 2.3 Diesel	TH180
Bedford CF Van	1982-87	1.8, 2.3, 2.3 Diesel	TH180C
Belmont	1984-91	1.8L	TH125C
Calibra	1989-97	2.0L	AW50-40LE
Carlto Diesel	1988-89		A43DL
Carlton		1.8L Carb, 2.0Li	A43D
Carlton	1978-82	2.0L	TH180
Carlton	1982-87	1.8, 2.0, 2.0Li, 2.2Li	TH180C
Carlton	1987-89	1.8, 2.0, 2.0Li, 2.5Li, 3.0Li	A43DL
Carlton	1990-94	2.0, 2.4, 2.6, 3.0L	4L30E
Carlton Diesel	1978-82	1.8L	TH180
Carlton Disel	1982-87	2.3L	TH180C
Cavalier	1975-91	1.6, 1.9, 2.0L	TH180
Cavalier	1981-88	1.6, 1.8, 2.0L	TH125C
Cavalier	1989-95	1.6, 1.8, 2.0L	AW50-40LE
Cavalier & Astra	1989-95	2.0 Ecotec Twin Cam	AW50-40LE
Chevette	1979-84	1.2L	TH180
Corsa	1993-01		AW60-40LE
Corsa	2001-On		AW60-40LE
Cresta PB	1962-65	2.6, 3.3L	M5 Rotomatic
Cresta PC	1966-72		Powerglide
Cresta PC	1972-73	3.3L	TH180
Cresta PC	1972-73		TH180
Firenza	1971-73	2.3L	TH180
Frontera B	1999-On	3.2L, 2.2L TD	4L30E
Magnum	1973-78	1.8, 2.3L	TH180
Monteray	1992-97	2.5L	4L30E
Monteray	1998-00	3.5L	4L30E
Omega	1994-03	2.0, 2.5, 3.0L	4L30E
Omega Diesel	1994-03	4L,6L, 2.5 Diesel	4L30E
Omega Diesel	1994-03	2.5L TD	4L30E
Royale	1978-84	2.8, 3.0L	TH180
Senator	1984-89	2.5Li, 3.0Li	4L30E
Senator	1991-94	2.6, 3.0L	A43DL
Senator Diesel	1984-89	2.2L	A43DL
Signum	2003-On	2.2L Diesel	AW55-50SN
Sintra	1997-99		AW50-42LE
Tigra	1993-01		AW60-40LE
Vectra B	1996-01	1.6L	AW60-40LE
Vectra B	1996-01	1.8XE, 2.0, 2.5L	AW50-42LE
Vectra B	1996-01	1.8L	AW60-42LE
Vectra C	2002-On	2.2, 3.2, 2.2L TD	AW55-50SN
Vectra CDTI 150	2004-On	1.9L Diesel	6T70
Ventura	1969-76	3.3L	TH180
Viceroy	1978-82	2.5, 2.8L	TH180
Victor	1969-76	1.6, 2.0, 2.3L	TH180
Victor & Viscount	1969-73	3.3L	TH180
Victor VX Series	1973-78	1.8, 2.3L	TH180
Viva	1969-80	1.6, 1.8, 2.0, 2.3L	TH180
Viva	1971-75	1.25L	TH180

VOLKSWAGEN

MODEL	YEAR	ENGINE	TRANS
1500, 1600, 411, 412	1969-75		003
Beetle	1969-75		003
Beetle	1998-04	1.8, 1.9, 2.0L	01M
Beetle	2005-On	1.8, 1.9, 2.0, 2.5L	09G (TF-60SN)
Bora 4Motion	1999-On		01M
Bora Variant	1999-On		01M
Cabrio	1995-01	2.0L	01M

VEHICLE INDEX

VOLKSWAGEN

MODEL	YEAR	ENGINE	TRANS
Cabriolet	1985-92	1.8L	010
Camper	1975-05		090
Caravelle	1990-94		098
Caravelle	1995-On		01P
Corrado	1989-95		096
Dasher	1969-75		003
Dasher	1975-05		089
Eos	2007-On	2.0, 3.2L	02E (DSG)
Eurovan	1992-94		098
Eurovan	1995-On		01P
Golf			09G (TF-60SN)
Golf	1985-92		010
Golf	1993-94		096
Golf	1995-03	1.8, 1.9, 2.0L	01M
Golf	2000-On		JF506E
Golf	2004-On	2.0L	01M
Golf	2004-On	1.9 Diesel	09A (JF506E)
Golf 4Motion	2000-On		JF404E
Golf Variant	2000-On		JF404E
GTI	1999-01	1.8, 2.8L	01M
GTI	2002-06	1.8L	09A (JF506E)
GTI	2007-On	2.0L	02E (DSG)
Jetta	1975-92	1.6, 1.7, 1.8L	010
Jetta	1993-94	1.8, 1.9, 2.0L	096
Jetta	1995-01	1.8, 1.9, 2.0, 2.8L	01M
Jetta	2002-03	1.9, 2.0L	01M
Jetta	2002-03	1.8, 2.8L	09A (JF506E)
Jetta	2005-On	1.9, 2.0, 2.5L	09G (TF-60SN)
Jetta GLX	1994-98		096
Jetta TDI	2008-On	2.0L TD	02E (DSG)
Jetta, Wagon	2004-05	1.8, 1.9 Diesel	09A (JF506E)
Jetta, Wagon	2004-05	2.0L	01M
Kombi	1975-05		090
Lupo	1999-On		JF404E
Passat	1990-94	2.0, 2.8L	096
Passat	1995-97	2.0 2.8L	01M
Passat	2006-On	3.6L	09M (TF-60SN)
Passat	2006-On	2.0L	09G (TF-60SN)
Passat 4 Motion	1999-On	W8, 4.0L	ZF5HP19FLA
Passat CC	2009-On	2.0TC, 3.6L	09M (TF-60SN)
Passat, GS, GLS, GLX	1998-05	1.8, 2.8, 4.0L	ZF5HP19FL
Phaeton	2004	6.0L	ZF5HP24A (01L)
Phaeton	2004-05	4.2L	09L (TR-60SN)
Pickup	1975-05		010
Polo Coupe	1995-On		JF404E
Polo Variant	1997-On		01M
Quantum	1982-88	4 cyl.	089
Quantum	1982-88	5 cyl.	087
R32	2008-On	3.2L	02E (DSG)
Rabbit	1980-93		010
Rabbit	2006-09	2.5L	02E (DSG)
Routan	2009-On	3.8, 4.0L	62TE
Santana	1974-86		003
Santana	1985-86		087
Scirroco	1975-05		010
Sharan	1996-00		098
Sharan 4Motion	2000-On		JF506E
Tiguan	2008-On	1.4, 2.0L TC	09G (TF-60SN)
Touareg, Tdi	2004-On	3.2, 3.6, 4.2, 5.0L, 3.0TDi	09D (TR-60SN)
Touran (Non US)	2003-On	1.6, 1.9, 2.0L	09G (TF-60SN)
Transporter	1973-75		003
Transporter	1976-87		089
Transporter	2003-On		09K (TF-60SN)

VEHICLE INDEX

VOLKSWAGEN

MODEL	YEAR	ENGINE	TRANS
Transporter (T4)	1988-94		098
Type 2 Bus	1968-05		090
Type IV	1969-75		003
Vanagon	1980-92	2.0, 2.1L	090
Vento	1992-95		096
Vento	1996-On		01M

VOLVO

MODEL	YEAR	ENGINE	TRANS
120, 140, 160, 240, 1800	1964-75		BW35
240	1964-75		BW35
240	1976-81	2.1L	AW55
240	1980-84	2.4L Diesel	BW55
240	1982-85	2.1L Turbo	AW71
240	1985-92	2.1L	AW70
240	1985-95	3.2L	AW70
240	1992-93	2.3L	AW70L
260	1974-82		BW55
260	1982-85	Turbo	AW71
740	1985-92		AW70
740	1986-93	2.3L	ZF4HP22
740	1990-92		AW72L
740 Turbo	1985-90		AW71
740 Turbo	1990-92		AW71L
760	1983-90		AW71
760	1986-91	2.3L	ZF4HP22
780	1987-91		AW71
850	1993-97		AW50-40
940	1991-95	2.3L	ZF4HP22
940	1991-97	Turbo	AW71L
940	1991-97		AW72L
960	1993-97		AW30-40
C30	2008-On	2.5L	AW55-50SN
C70	1998-On		AW50-42LE
Cross Country	2002	2.4L	4T65E
S40	2000-01	1.9L	AW50-42LE
S40, V50	2002-On	1.9, 2.4, 2.5L	AW55-50SN
S50	2005-On	2.3, 2.4, 2.5L	AW55-50SN
S60	2001-On	2.3, 2.4, 2.5L	AW55-50SN
S60 R	2006-On	2.5L	AWF21, AF40, TF-80SC
S70	1998-00	2.3, 2.4L	AW50-42LE
S70, XC70	2001-06	2.3, 2.4, 2.5L	AW55-50SN
S70, XC70	2006-On		AWF21, AF40, TF-80SC
S80	1999-02	2.5L	4T65E
S80	1999-04	2.9L	AW50-42LE
S80	2004-06	2.5L	AW55-50SN
S80	2007-On	3.2, 4.4L	AWF21, AF40, TF-80SC
S90	1997-98	3.0L	AW30-43 (A341E)
S90, XC90	2003-04	2.9L	AW50-42LE
S90, XC90	2003-06	2.5L	AW55-50SN
S90, XC90	2006-On	3.2, 4.4L	AWF21, AF40, TF-80SC
V70	1998	2.3, 2.5L	AW50-42LE
V70 R	2006-On	2.5L	AWF21, AF40, TF-80SC
V90	1997-98	2.9L	A341E
XC60	2009-On	3.0TC	AWF21, AF40, TF-80SC

ALTO SERIES REFERENCE CHART

SERIES	DESCRIPTION
11000	GM DYNAFLOW 1948-63 Except Buick Special
	LENCO RACING
12000	GM BUICK SPECIAL 1961-63
13000	GM HYDRAMATIC 1951-64 STANDARD & DUAL RANGE
14000	GM JETAWAY "315" 1956-64
15000	GM ROTO-HYDRAMATIC "240" Model 05 / F-85 1961-63
16000	GM ROTO-HYDRAMATIC "375" Model 10 / Slim Jim 1961-64
18000	GM POWERGLIDE CAST IRON CASE 1950-62
19000	GM POWERGLIDE ALUMINUM CASE 1962-73
21000	CHRYS POWERFLITE 1953-61
22000	CHRYS TORQUEFLITE CAST IRON CASE 1956-61
23000	FORD SMALL CASE 1951-67, MEDIUM CASE 1955-69 LARGE CASE 1958-65
	BW MODELS 3 thru 8, 11 thru 12 CAST IRON CASE 1956-61
	FORD FMX 1968-81
	LENCO RACING
24000	FORD FORDOMATIC 2 SPEED 1959-64
25000	FORD C4 1964-81 C5 1982-86
26000	FORD C6 1966-96
	FORD E4OD 1989-98 4R100 1999-On
27000	CHRYS TF6 - A904, 998, 999 1960-On 30RH, 31RH, 32RH
	CHRYS A500 (40RH, 42RH, 42RE, 44RE) 1989-On
28000	CHRYS TF8 - A727 (36RH, 37RH) 1962-97
	CHRYS A518 (46RE, 46RH) 1990-On
	CHRYS A618 (47RE, 47RH) 1994-On, A618 (48RE) 2003-On
	LENCO RACING
29000	AW/BW T35, TA, TB, TC, T37 (UK) 1962-On T65, 66 (UK). BW40/51 1971-On
30000	GM SUPER TURBINE 300 1964-69
31000	GM 3L80 TH400, TH375 1964-95 TH425, TH475 1966-78
	GM 4L80E,4L85E 1990-On
32000	GM TH350, TH350C 1969-86 TH250, TH250C 1980-84
33000	BW 3 BAND 1950-56
34000	VW TYPE 003 3 SPEED 1969-76
35000	TOYOTA A10 2 SPEED 1965-70
36000	TOYOTA A30 3 SPEED 1968-78
37000	TOYOTA A20 2 SPEED 1970-74
38000	GM 3L30 TH180, TH180C 1969-98
	GM 4L30E 1990-On OPEL AR25 (2.5L), AR35 (3.0L) & BMW THM1
39000	MAZDA RC4AEL, JR405E 2004-On
41000	FORD C3 1974-87
	FORD A4LD, A4LDE, 4R44E, 4R55E 5R44E, 5R55E 1985-On
42000	NISSAN 3N71B, L3N71B 1971-87
	NISSAN E4N71B, L4N71B 1983-93
	SUBARU M41, M41A (3AT) 1975-94
43000	GM TH200, TH200C 1976-87
	GM TH200-4R 1981-90
	GM TH325 1979-81 TH325-4L 1982-85
44000	TOYOTA A40 SERIES 1972-On, AW372 (R4AW2) / KM148 (V4AW2)
	AW/BW AW55 / BW55 1974-81
	AW/BW AW70, 71, 72 4 Speed 1981-97
	TOYOTA A55, A55F 1979-87

ALTO SERIES REFERENCE CHART

SERIES	DESCRIPTION
45000	CHRYS A404, 413, 470, 670 1978-On 30TH, 31TH
46000	VW AUDI 3 SPEED 1975-93 010, 087, 089, 090
47000	HONDA 2 SPEED (95mm Clutches) 1973-80
48000	GM 3T40 TH125, TH125C 1980-On
49000	FORD AOD 1980-93, AODE 1992-95 4R70E/W 1993-On, 4R75E/W 2004-On
51000	FORD ATX 1981-94
52000	Z F ZF3HP12, ZF3HP20 1966-81
53000	Z F ZF3HP22 RWD 1976-84
	Z F ZF4HP22 1983-99 ZF4HP24, ZF4HP24A 1983-99
54000	MERCEDES 722.0, 722.1, 722.2, (4 Bolt) W3A040, W4B025, K4A40, K4C025
55000	ALLISON AT540, 542, 543, 545, 1545, VS 1970-On
56000	ALLISON MT640, 643, 644 - 4 Speed MT650, 653, 654 - 5 Speed
	ALLISON HT740, 747, 750, 754, V730 1972-On
57000	GM 4L60 TH700-R4 1982-92, 4L60E 1992-On GM 4L65E 2001-On, 4L70E 06-On
58000	HONDA 3 SPEED - 106mm Clutch 1976-85
	HONDA 4 SPEED 1983-85 2 SHAFT (106mm Clutch)
	HONDA 4 SPEED 1984-On 2 SHAFT (110mm Clutch)
	HONDA 4 SPEED 1985-98 2 SHAFT (116mm Clutch)
	HONDA 4 SPEED 1992-97 3 SHAFT (110mm Clutch)
	HONDA 4 SPEED 1990-On 3 SHAFT (116mm Clutch)
	HONDA 5 SPEED 2006-On 3 SHAFT
59000	MITSUBISH, HYUNDAI, CHRYSLER KM 3 & 4 SPEED 1979-On
61000	NISSAN RN3F01A, RL3F01A 1982-92
62000	GM 4T60 TH440-T4 1983-93 4T60E 1992-99, 4T65E 1997-On
63000	MAZDA MAZDA, GM, FORD, ISUZU F3A 1981-97
	MAZDA N4AEL, N4AHL, NC4AEL 1986-97
64000	MERCEDES 722.3 (6 Bolt) W4A040 1981-97
65000	TOYOTA A130, 131, 132 1984-On MX1, MX17
	TOYOTA A140, 141, 142 1983-On
	TOYOTA A240 SERIES 1984-On
	TOYOTA A540E/H, A541E 1988-On
66000	RENAULT MB101,MB1, MB3, ML1 - FWD (Transaxle) MJ1, MJ3, MJ5 - FWD (Inline)
68000	NISSAN RE4F02A, RL4F02A 1985-94
69000	FORD AXOD 1986-90, AXODE 1991-93 AX4S 1994-On
	FORD AX4N / 4F50N 1995-On
71000	MERCEDES 722.4 (BABY 6 Bolt) W4A020 1983-97
72000	RENAULT 4139 / ML1 - FWD (Inline) 1973-89
	RENAULT 4141 Delorean, Alpine Zimmer Motor Home 1981-On
73000	TOYOTA A340E, H, F, 341E, 343E, 350E, AW4 R4AV3, V4AW3, AW30-40, AW30-43, AW30-80
	TOYOTA A340 TRANSFER CASE 1988-95
74000	MAZDA MAZDA - G4AEL, G4AHL, GF4AEL 1986-On FORD - G4EAT, GF4EAT 1986-On
75000	MAZDA R4AEL, RA4AEL, RB4AEL 1988-99
	NISSAN RE4R01A, RL4R01A 1988-On
	SUBARU R4AX-EL (4AT) 1987-98
76000	MERCEDES 722.8 ECVT A & B Class 2004-On

ALTO SERIES REFERENCE CHART

SERIES	DESCRIPTION
77000	CHRYS A604 (40TE, 41TE, F4AC1) 1988-On
	CHRYS A606 (42LE) 1993-On, 42RLE 2001-On
	CHRYS 62TE 2007-On
78000	HONDA 4 SPEED 1990-On 3 SHAFT (120mm Clutch)
	HONDA ACURA NSX 4 Speed 1991-On
79000	BTR BTR 85/91/95LE BTR 74/93/97LE 1990-On
	API, II, IIIE European Models
	ASIAN "MINI" CARS 1988-On
	ASIAN "MINI" CARS 1985-On
81000	MAZDA MAZDA F4AEL 1990-99 FORD 4EAT Type F 1990-99
82000	FORD CTX1, CTX2 (CVT) 1990-On
	Z F VT1F CFT25/27 CVT MINI 2002-09
83000	TOYOTA A440F 1985-92 A442F 1993-95
87000	GM DOUG NASH MK2, MH5 1984-88
101000	HONDA 4 SPEED 1991-On 2 SHAFT (125mm Clutch)
102000	GM SATURN TAAT 1991-On MP6. MP7
103000	Z F ZF4HP14 FWD 1986-94
104000	Z F ZF4HP18Q (Transverse) 1986-98 ZF4HP18FL, FLA, FLA (Inline) 1988-98
	Z F ZF5HP18 1991-On A5S 360
105000	GM GM / ISUZU JF403E 1990-93
	MAZDA LJ4AEL 1995-On
	NISSAN RE4F04A/V 1992-On FORD - 4F20E 1992-On
106000	NISSAN RE4R03A 1989-On, RG4R01A 1988-On , ISUZU JR403E 1988-On
107000	NISSAN RE4F03A/V, RL4F03A, RL4F03V 1991-On
108000	MITSUBISHI, HYUNDAI, CHRYSLER F4A33, F4A33EV, W4A33 1991-On
109000	RENAULT AR4, AD4, AD8 1988-On
	VW AUDI 4 SPEED 1989-On 095, 096, 097, 098 (AG4), 01M, 01N, 01P
110000	AW/BW AW50-40LE, AW50-41LE 1989-On AW50-42LE, LM 1999-On
111000	GM 4T80E 1993-On
112000	FORD - CD4E 1994-On MAZDA - LA4AEL 1994-On
113000	Z F ZF5HP30 1993-On A5S 560
	Z F ZF6HP32
114000	GM 4T40E 1995-On 4T45E 1998-On
115000	AW/BW AW60-40, AW60-42LE (AF-13) 1995-On AW60-40SN 1998-On
116000	HONDA 4 SPEED 1995-On 3 SHAFT (116, 120, 132mm Clutch)
117000	MERCEDES 722.5 (W5A030) 5 SPEED with OVERDRIVE 1990-On
118000	HONDA CVT 1996-On
119000	HONDA 4 SPEED 1995-On 3 SHAFT (116, 120, 132mm Clutch)
121000	Z F ECOMAT 4HP500, 5HP500, 4HP590, 5HP590 4HP600, 5HP600, 6HP600
122000	NISSAN RE5R01A, JR506E 1991-On
123000	MITSUBISHI, HYUNDAI F4A41, F4A42 1996-On, W4A42 2003-On, F4A4B 2007-On
	HYUNDAI/KIA A5GF1 2006-On
	MITSUBISHI F1C1 CVT 2007-On
124000	MITSUBISHI F4A51, F5A51 (FWD) 1997-On
	MITSUBISHI R4A51, V4A51, R5A51, V5A51 (RWD) 1997-On
	HYUNDAI / KIA A5HF1 2006-On
	HYUNDAI / KIA F5A51 2002-On

ALTO SERIES REFERENCE CHART

SERIES	DESCRIPTION
125000	VOITH
126000	New Venture Gear Transfer Case NVG136, 236, 246, 247
127000	DAIHATSU MINI
	TOYOTA U540E
128000	CHRYS 45RFE, 545RFE 1999-On
	CHRYS 68RE 6 Speed 2007-On
129000	AW/BW AW TF60-SN, 09G 6 Speed 2003-On
131000	HINO A860 SMALL TRUCK
132000	Z F ZF5HP24 (BMW / JAGUAR) 1995-On ZF5HP24A (AUDI V8 - O1L) 1997-On
133000	MAZDA MAZDA - FN4AEL 1999-On FORD - 4F27E 1999-On
134000	HONDA 4 SPEED 1999-On 3 SHAFT (123 & 128 Clutch)
135000	SUBARU 4 SPEED (4EAT) 1998-On
	SUBARU 5 SPEED (5EAT) 2005-On
136000	TOYOTA U140E/F 1998-On
	TOYOTA U250E 2005-On
137000	FORD 5R55N 1999-2002, 5R55W 2002-On 5R55S 2003-On
138000	Borg Warner Transfer Case BW4405. BW4406
139000	Z F ZF5HP19 (BMW) 1997-On, ZF5HP19FL, FLA (AUDI 01V) 1995-On ZF5HP19HL (Porsche) 1998-On
141000	MERCEDES 722.6 (W5A580, W5A330) 5 SPEED with OVERDRIVE 1996-On
142000	TOYOTA A650E 1998-On
143000	ZF 6HP19 2004-On
144000	TOYOTA U340E, U341E/F 2000-On
145000	TOYOTA U240E, U241E 2000-On
146000	HONDA 5 Speed 2000-On
147000	MERCEDES 722.7 (W5A180) 4 SPEED with OVERDRIVE 1998-On
148000	ALLISON WORLD MD3060, 3066, 3070, 3560 B300, 400, 3000MH 1995-On
149000	ALLISON 500, 500P, 500R, 500PR 1995-On
151000	VW AUDI 01J CVT 2001-On
152000	ALLISON 1000, 2000, 2400 SERIES 1999-On
153000	AW/BW AW 450-43LE 1998-On ISUZU RNJ
154000	Z F ZF4HP20 1998-On
155000	RENAULT, CITROEN, PEUGEOT AL4, DPO (STA) 1997-On
156000	GM 4L40E, 5L40E, 5L50E 1999-On A5S390R, A5S360R
158000	VW JATCO JF404E 2000-On
159000	AW/BW AW55-50SN 1999-On, AW55-51SN 2005-On AF33-5, RE5F22A
161000	HONDA 4 & 5 SPEED 2002-On 3 SHAFT (120 & 123 Clutch)
162000	VW JF506E, 09A FORD 5F31J 2001-On NISSAN RE5F01A 2001-On, MAZDA JA5A-EL 2003-05
163000	TOYOTA U150E/F 2002-On
165000	MITSUBISHI F5AH1 (RM-45) 2001-On
166000	FORD 5R110W 2003-On Torqshift 2005-On
167000	GM SATURN CVT 2002-On VT20E, VT25E
168000	AW/BW AISIN A581 2001-On FL50, FL60, FL70 FREIGHTLINER
169000	HONDA 4 & 5 SPEED 2002-On 3 SHAFT (120 & 123 Clutch)
172000	HONDA ACURA MDX 5 Speed 2003-On ACURA RL 5 Speed 2005-On
	SATURN VUE
173000	TOYOTA A750E, A750F 5 SPEED RWD 2003-On
174000	NISSAN RE5R05A, A5SR1/2 2002-On

ALTO SERIES REFERENCE CHART

SERIES	DESCRIPTION
	NISSAN/INFINITI RE7R01A, JR710E
175000	SUZUKI JF402E, JF405E 1998-On SR410, SR412 WAGON R
	AW TW-40LS 98+-On
	SUZUKI 4AT A174 JIMNY 1997-On
176000	SUBARU CVT REX (ASIAN CVT)
177000	HONDA ACURA TSX 5 Speed 2004-On
181000	NISSAN RE0F06A CVT 1996-On Primera, Tino, Bluebird, Sunny (NonUS)
	NISSAN RE0F09A CVT JATCO ATCU JF010E 3.0L, 3.5L 2003-On
	JATCO JF011E 2007-On 2.4L, 2.4L, 2.5L Nissan, Suzuki, Mitsubishi, Dodge, Jeep
	JATCO JF015E RE0F11A 2010+
182000	GM SATURN AF23-5 5 Speed 2003-On JATCO AW235
183000	Z F ZF6HP26
	FORD 6R60 2002-On
	FORD 6R80 2007-On
185000	AW/BW AW TR60-SN 6 Speed 2004-On
186000	FIAT JAPAN ECVT 1993-On
186000	TOYOTA K310 CVT
186000	TOYOTA K111 CVT
187000	AW/BW AW80-40LS, AW81-40LE 2004-On GM/DAEWOO
188000	TOYOTA A760E/H, A761E/H 6 SPEED RWD 2005-On
189000	MERCEDES 722.9 2004-On
191000	HYUNDAI JF402E 2003-On
192000	Z F ZF4HP16 FWD 2004-On
193000	FORD CVT (CFT30 ZF) 2005-On
	FORD CVT (CFT23) 02-07
194000	MERCEDES 720.91 (W4B110)
195000	GM 6L80E, 6L90E 2006-On
196000	GM GM 6T70, 6T75 6 Speed 2007-On FORD 6F / 6F55 6 Speed 2007-On
	FORD FORD 6F / 6F55 6 Speed 2007-On GM 6T70, 6T75 6 Speed 2007-On
197000	AW/BW AWF21, TF80-SC, AF40-6, AM6, AW6A-EL 6 Speed 2005-On
198000	BORG WARNER DUAL SHAFT (AUDI)
199000	TOYOTA U660E 2007-On
201000	GM 6L50E 07+ (CADILLAC)
202000	DODGE ISUZU AS68RC 2007+
	CHRYSLER AS69RC 2013+
203000	TOYOTA A960E 2006-On
	LEXUS IS250, ES300 2006-On
204000	GM 6T40/6T45 2008-On
	FORD 6F35 09-On
205000	GM 2ML70 2-Mode Hybrid RWD Chevy Tahoe, GMC Yukon, Cadillac Escalade 2007-On
206000	FORD 6R140 Truck 6.7L Diesel, 6.2L Gas 11+
207000	TOYOTA AA80E RWD 8 SPEED
208000	TOYOTA AB60E/F 2007-On
209000	GETRAG 6DCT DUAL CLUTCH
	NISSAN GT-R (GR-6 Dual Clutch)
210000	GM 6T30E 09+
211000	AUDI S-TRONIC DSG 07-On
212000	HYUNDAI KIA A6GF1
213000	HYUNDAI KIA A6LF2, A6LF2 (D)

ALTO SERIES REFERENCE CHART

SERIES	DESCRIPTION
214000	HYUNDAI KIA A6MF1, A6MF2
	CHRYSLER/DODGE 6F24 POWERTECH 13+
215000	ZF8HP45
216000	ZF8HP70
217000	VW/AUDI 0AM (DQ200) DSG TWIN CLUTCH 7 SP FWD
218000	JF613 (NISSAN, MITSUBISHI, HYUNDAI, KIA), RENAULT (AJ0)
219000	NISSAN GT-R (GR-6 Dual Clutch)
221000	Dodge/Chryler/Isuzu AS69RC
222000	TR80-SD (OC8) AUDI, PORSCHE, VW
223000	CHRYSLER 948TE 13+

ALTO Part Number Product Codes

Product Group Range		Description
xxx000 to xxx099		**Kit Components**
xxx100 to xxx149		**Sealing Rings - Bulk Numbers**
xxx150 to xxx199		**Washers - Bulk Numbers**
xxx200 to xxx249		**Bushings - Bulk Numbers**
xxx250 to xxx299		**Snap-Rings - Bulk Numbers**
xxx300 to xxx399		**Miscellaneous Hard Parts**
xxx400 to xxx449		**Metal Clad Seals**
xxx500 to xxx599		**Modulators**
xxx600 to xxx699		**Kits**
xxx600		Sealing Ring Kits
xxx625		Bushing Kits
xxx630		Short Bushing Kits
xxx635		Washer Kits
xxx670		Piston Kits
xxx680		Snap Ring Kits
xxx700 to xxx749		**Clutch Plates**
xxx700		even numbers = Friction (Internal Teeth)
xxx701		odd numbers = Steel (External Teeth)
xxx740		Hi-Performance Red Eagle ©
xxx750 to xxx759		**Clutch Plates Modules**
xxx751		Friction & Steel Module
xxx752		Friction Module
xxx753		Steel Module
xxx754 to xxx759		Powerpack ® & Specialty Kits
xxx800 to xxx849		**Gasket Kits & some components**
xxx800		even numbers = Overhaul Kits
xxx801		odd numbers = paper & rubber kits
xxx815		Pan gasket- Fiber or Farpak
xxx816		Pan gasket- Cork & rubber
xxx900 to xxx939		**Master Overhaul & Banner Kits**
xx901		Master Overhaul Kits
xxx901LS		Banner Kits
xxx901SK		Super Kits
xxx940 to xxx949		**Filters**
xxx940FK		Filter Kits
xxx950 to xxx959		**Bands - Normal Duty**
xxx960 to xxx969		**Bands - High Performance**

GLOSSARY OF TERMS: English to Spanish

TERMS (ENGLISH)	TERMINOLOGIA (ESPANOL)
1ST	Primer
2ND	Segundo
2wd - 2 Wheel Drive	2wd -Traccion / Impulsion de dos Ruedas
3RD	Tercera
4TH	Cuarta
4wd - 4 Wheel Drive	4wd - Traccion / Impulsion de cuatro Ruedas
AFTERMARKET	Mercado de Reposicion
ANTI-DRAG PLATE	Disco / Plato Anti Arrastre
AUTOMATIC	Automatico
AXLE SHAFTS	Ejes / Flechas Propulsores
B0 (Toyota) - Overdrive Brake	B0 (Toyota) - Freno de Sobremarcha / Sobremultiplicacion / supermarcha
B1 (Toyota) - No. 1 Brake / 2nd coast brake	B1 (Toyota) - Freno No. 1 / Freno del 2 de avanze sin esfuezo
B2 (Toyota) - No. 2 Brake / intermiadiate brake	B2 (Toyota) - Freno No. 2 / Freno intermedio
B3 (Toyota) - No. 3 Brake / 1st & Reverse Brake	B3 (Toyota) - Freno No. 3 / 1ra& Freno de Marcha atras
BAND NUT	Tuerca de banda
BAND, BND	Banda
BANNER KIT	Overhaul Kit y Juegos Discos de Friccion
BEARINGS	Baleros / Cojinetes / Caja de Bolas / Conchas
BLACK – BLK	Negro
BLUE	Azul
BODY	Carrocería / Cuerpo
BOTTOM	Abajo
BRAKE, BRK	Freno
BRASS	Bronce
BREAKING PLATE	Disco opresor
BUSHINGS	Bujes
C0 (Toyota) - Overdrive Direct	C0 (Toyota) - Sobremarcha / Sobremultiplicacion / Marcha Directa
C1 (Toyota) - Forward	C1 (Toyota) - Delantera (o)
C2 (Toyota) - Rear	C2 (Toyota) - Trasera (o)
CASE SAVER	Protector de Caja
CLUTCHES	Embragues
COMBO	combinacion de los tipos que abarca
COMPONENTS	Componentes
CORK & RUB, CORK AND RUBBER	Corcho & Hule / Goma / Caucho
COVER	Cubierta
CUTTING EDGE	Borde Cortado
DEEP	Profundo
DESIGN & ENGINEERING	Ingenieria y Diseño
DIR, DIRECT	Directa
DR	Drive / marcha
DRUM	Tambor
EARLY	Temprano / previo / anterior / antiguo
ELEC	Electrónica
F/D - Forward / Direct	Avance / Directa (o)
F/R Front/Rear	Delantero
FELT	Felpa
FILTER, FLT	Filtro
FINAL DRIVE	Marcha final
FLEX	Flexible
FORWARD, FOR	Delantero / avance / arranque
FR/MODULE	Juego de discos de fricción

GLOSSARY OF TERMS: English to Spanish

TERMS (ENGLISH)	TERMINOLOGIA (ESPANOL)
FRICTION CLUTCHES	Discos de Fricción
FRONT, FRT	Front: delantera
FULL RING	Juego completo de anillos
FWD Front Wheel Drive	FWD- Transmission / Traccion delantera
GASKETS , GSK	Juntas de Carter
GEARING	Engranaje
GEARS Engranes	
GOV	Governador
GREEN, GRN	Verde
GROB	Rayado / acanalado / Estriado / Fresado
HARD PARTS	Partes Duras
HARDENED	Endurecido
HEAVY DUTY	Trabajo Pesado
HEAVY DUTY APPLICATION	Aplication uso pesado
HEG Hi-Energy Gray	HEG - Gris de Alta Energia
HIGH	Alta
HI-PERFORMANCE. HP	Alto Rendimento
ID - Inside diameeter	ID - Diametro Interior
IN-HOUSE Produccion	Interna
INN	Inner
INOVATIONS Inovaciones	
INPUT	Entrada
INT	Intermedia
KICK DOWN	Apresurar la marcha / Aceleron
KOL	Kolene® (material)
LARGE, LRG	Grande, largo
LATE	Posterior / reciente / tarde
LIGHT DUTY	Trabajo Ligero
LOW	Baja (o)
MASTER KIT	Banner Kit y El Juego de Discos de Acero
MEDIUM DUTY	Trabajo Mediano
METAL CLAD SEALS	Retenes
MISCELLANEOUS Articulos	Miscelaneous
MODULATORS , MDL	Moduladores
MODULES	Juegos de Discos
MOLDED PISTON	Pistones vulcanizados / moldeados
NEW DESIGN	Diseño nuevo
NYLON	Nylon
OD	Overdrive / sobre marcha
OD:	OD - Diametro exterior
OEI	Mejora de Equipo Original
OEM	Fabricante de Equipo Original
OIL PAN	Empaque de carter
OVERHAUL KIT	Cartera de Empagues y Ligas con retenes y anillos
PAN	Carter
PAN GASKETS	Empaques de carter
PAN GSK	Empaques de carter
PL - Parallel Lines (grooves)	PL - Lineas Paralelas (ranuras / estrias / acanalado / Fresado)
PLNI - Parallel lines non intersecting	PLNI - Lineas Paralelas sin Ranuras Intersectantes
POWER MANAGEMENT	Poder de Mando
POWERBAND	Banda especial / Banda más ancha

GLOSSARY OF TERMS: English to Spanish

TERMS (ENGLISH)	TERMINOLOGIA (ESPANOL)
POWERPACK	Paquete de discos de poder
POWERSOLUTIONS	Articulos fabricados por Alto Products para solucionar un problema presentado
PRESSURE PLATES	platos de presion
PURPLE	Purpura / Morado (a)
PUSH IN	De presion
REAR, RR	Trasero
REAR AXLE SHAFT	Flecha / Eje Trasero
REBUILDING KITS	Juego de Reparacion
RED, ORANGE	Rojo o naranja
REVERSE, REV	Reversa
RIGID	Rígida (a)
RUBBER, RUB	Hule / Goma / Caucho
RWD - Rear Wheel Drive	RWD - Transmision / Traccion / Propulsion por las ruedas traseras
SAD	C / Diafragma sencillo
SB Sunburst grooves	SB - Ranuras / estrias / acanalado de broche en figura de sol
SCREW	Rosca
SEALING RINGS	Anillos
SEALS	Retenes
SEL	Selectivo
SHORT	Corto / pequeño / Chico
SHORT RING	Juego de anillos básico
SIDE	Lateral
SM - Smooth (no grooves)	SM - Suave / Liso sin ranuras / sin estria / sin acanalar / sin fresar
SMALL, SML	Pequeño / chico / corto
SNAP RINGS	Seguros
SPACER	Espaciador
SPLIT	Seccionada / Fraccionada / dividida
ST/MODULE	Juego de discos de acero
STANDARD	Estandar / Manual
STEEL	Disco de acero
STEEL CLUTCHES	Disco de acero
STRIPE	Franja o ralla
SUPER KIT	Master Kit y Filtro, Banda, Bujes Basicos, Moduladore
SYNCHRONIZER ASSEMBLIES	Ensamble Sincronizador
THIN	Delgado
TOP	Arriba
TRANSFER CASE	Caja de transferencia
TURB	Turbolator: rayado concéntrico
WITH, W/	Con
W/HOLES	Con turbolator
W/O	Sin
WAFFLE, WF	Tipo de galleta / Ranura forma cuadriculada
WAVE	Ondulado
WHITE	Blanco
WITH ARROW	Con flecha
YELLOW	Amarillo

TRANSMISSION CODES

GENERAL MOTORS CODES

CODE	TRANSMISSION	NOTES	CODE	TRANSMISSION	NOTES
M13	4T60E		MH1	4T80E	
M15	4T65E	245mm Converter	ML4	4L30E	
M30	4L60E		MN3	4T65E	258mm Converter
M32	4L60E	Corvette	MN4	4T40E	
M40	3L80	TH400	MN5	4T45E	
M41	A44DL	Tracker	MN7	4T65E	258mm Converter
M74	ALLISON 2000		MN8	ALLISON 1000	
M76	4T65E	4 Wheel Drive	MT1	4L80E	
M82	5L40E		MX1	A131L	
M90	4L40E		MX17	A210	
MD7	4T65E	245mm Conv. For China	MS7	A240E	
MD8	4L60	TH700			
MD9	3T40	TH125C			
ME9	4T60	TH440			

CHRYSLER CODES

CODE	TRANSMISSION	NOTES	CODE	TRANSMISSION	NOTES
30RH	A904		41TE	A604	
30TH	A404		41AE	A604	All Wheel Drive
31RH	A998		42LE	A606	
31TH	A413	Turbo	42RH	A500	A999
32RH	A999		42RE	A500SE	
36RH	A727		44RE	A500	
37RH	A727	Heavy Duty (Diesel)	46RH	A518	
40RH	A500	A904	46RE	A518SE	
40TE	A604	Light	47RH	A618	

TOYOTA TAG NUMBERS

CODE	TRANSMISSION
03-50	A40D
03-51	A40D
03-55	A40 / AW55
03-56	A41
03-70	A42D / AW70
03-70L	A42DL
03-71	A43D / AW71
03-71L	A43DL
03-71LE	A43DE / A46DE
03-72	AW372 / KM148
03-72L	A44DL / A45DL
03-72LE	A44DE
03-75	A43

GENERAL MOTORS
POWERGLIDE ALUMINUM CASE
1962-73

A ►

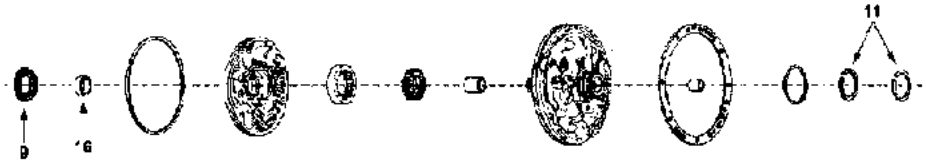

B ►

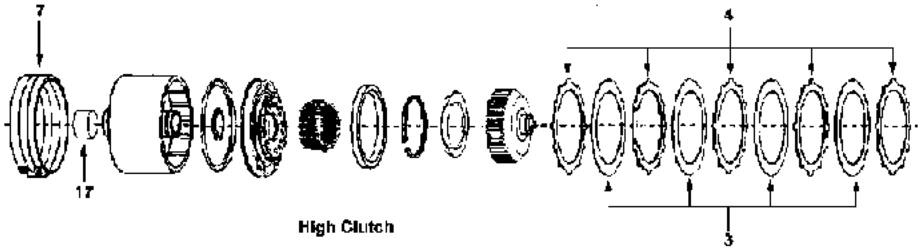

C ►

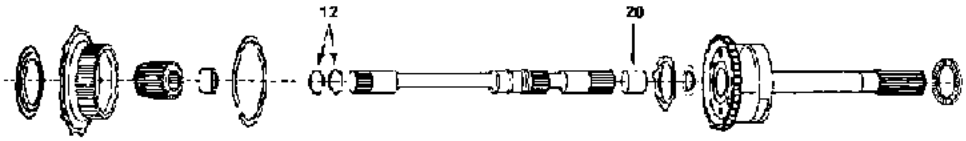

D ►

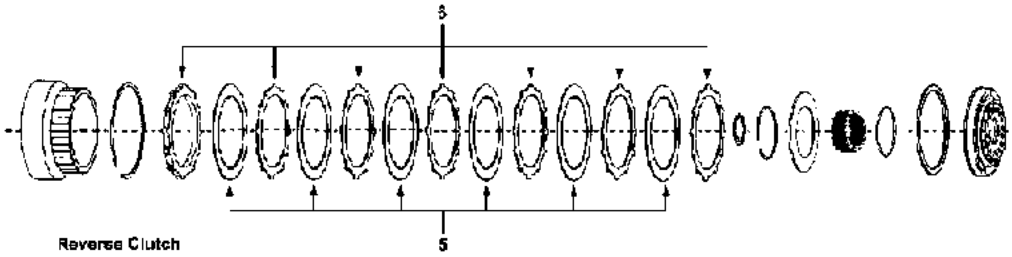

E ►

F ►

G ►

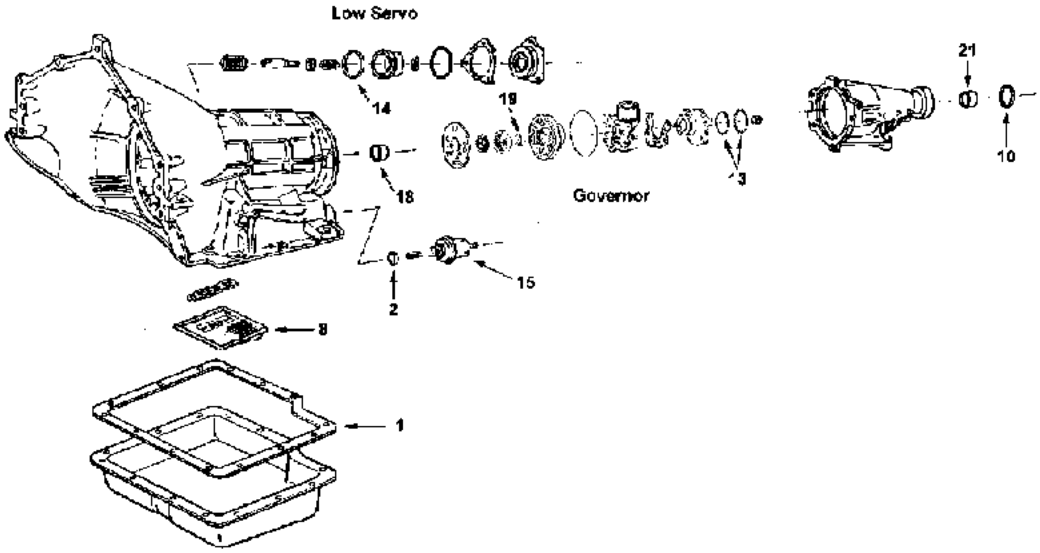

GENERAL MOTORS
POWERGLIDE ALUMINUM CASE
1962-73

KITS

*Add Suffix SK for Super Kit

ILL	Description	Years	Friction Module	Steel Module	Overhaul Kit	Banner Kit	Master Kit
KT	Rebuilder Kit	62-73	019752	019753	019800	019901LS	019901

KITS - HI-PERFORMANCE Red Eagle®

ILL	Description	Years	Friction Module	Steel Module	Overhaul Kit	Banner Kit	Master Kit
KT	Rebuilder Kit	62-73	019752HP	019753HP	019800HP	019901HPLS	019901HP
KT	Rebuilder Kit w/ Turbulator Front Steels	62-73	019752HP	019753HPH	019800HP	019901HPLS	019901HPH

KITS - HI-PERFORMANCE - with PowerPack®

ILL	Description	Years	Friction and Steel Module	Overhaul Kit	Banner Kit	Master Kit
KT	Rebuilder Kit	62-73	019750D	019800HP	NA	019901AHP
KT	Rebuilder Kit w/ Turbulator Front Steels	62-73	019750C	019800HP	NA	019901AHPH

KITS - HI-ENERGY - with PowerPack®

ILL	Description	Years	Friction and Steel Module	Overhaul Kit	Banner Kit	Master Kit
KT	Rebuilder Kit - HEG Frictions / Kolene Steels	62-73	019750E	019800HP	NA	019901C

MISCELLANEOUS GASKETS & KIT COMPONENTS

ILL	ALTO No.	REF No.	Description	Spec	Year	Qty	Notes
1G	019816	3789148	Gasket, Oil Pan	Cork/Rub	62-73	1	
1G	019816HP	3789148HP	Gasket, Oil Pan	Select-a-seal	62-73	1	
N I	019003	NL	Gasket, output/governor		67-73	1	
2F	010116A	6257218	O Ring, Modulator		62-73	1	

FRICTION CLUTCHES

ILL	ALTO No.	REF No.	Description	Spec	Year	Qty	Notes
3B	018708	3748703	Front	.098	62-73	3-5	Tan - 43T - OD: 5.062" - SM
5D	019702	3832396	Reverse	.098	62-73	4-6	Tan - 25T - OD: 6.461" - SM
5D	030702	3832396	Reverse	.098	62-73	4-6	HEG - 25T - OD: 6.461" - SM
5D	030702WF	NA	Reverse	.098	62-73	4-6	HEG - 25T - OD: 6.461" - WF

FRICTION CLUTCHES - HI-PERFORMANCE - Red Eagle® or Carbonite®

ILL	ALTO No.	REF No.	Description	Spec	Year	Qty	Notes
3B	019740	NA	Front	.098	62-73	3-5	Red - 43T - OD: 5.063" - SM
3B	018708A250	NA	Front - Carbonite®	.098	62-73	3-5	Crb - 43T - OD: 5.062" - PL
3B	019740PL	NA	Front	.098	62-73	3-5	Red - 43T - OD: 5.063" - PL
3B	019740WF	NA	Front	.098	62-73	3-5	Red - 43T - OD: 5.063" - WF
3B	019740BR	NA	Front - Bronze	.098	62-73	3-5	Brz - 43T - OD: 5.062" - SB
3B	019740A	NA	Front - PowerPack® Component	.061	62-73	AR	Red - 43T - OD: 5.063" - SM
3B	019740APL	NA	Front - PowerPack® Component	.061	62-73	AR	Red - 43T - OD: 5.063" - PL
3B	019740B155	NA	Front - PowerPack® Component	.061	62-73	AR	Red - 43T - OD: 5.062" - WF
3B	019740D155	NA	Front - Carbonite® thin	.061	62-73	AR	Crb - 43T - OD: 5.062" - PL
3B	019740E155	NA	Front - thin	.061	62-73	AR	G3C - 43T - OD: 5.062" - PL
3B	019744A170	NA	Front - Red Eagle® PowerPack® Component (1 sided) - internal spline	.067	62-73	AR	Red - 43T - OD: 5.063" - WF
4B	019743A170	NA	Front - Red Eagle® PowerPack® Component (1 sided) - external spline	.067	62-73	AR	Red - 12T - ID: 3.869" - WF
5D	032744	NA	Reverse	.098	62-73	5	Red - 25T - OD: 6.466" - SM
5D	032744-368	NA	Reverse - thicker steel core	.145	62-73	AR	Red - 25T - OD: 6.466" - SM

GENERAL MOTORS
POWERGLIDE ALUMINUM CASE
1962-73

FRICTION CLUTCHES - HI-PERFORMANCE - UNIT PACKS (ONE Rebuild)

ILL	ALTO No.	REF No.	Description	Spec	Year	Qty	Notes
KT	019740UP5	NA	Front clutch Frictions	.098	62-73	1	5 Red Eagle® Frictions
KT	019740BRUP5	NA	Front clutch Frictions - bronze	.098	62-73	1	5 Bronze Friction
KT	019740AUP8	NA	Front clutch Frictions - thin	.061	62-73	1	8 Red Eagle® Frictions
KT	032744UP5	NA	Reverse clutch Frictions	.098	62-73	1	5 Red Eagle® Frictions

STEEL CLUTCHES

ILL	ALTO No.	REF No.	Description	Spec	Year	Qty	Notes
4B	019701	1366440	Front	.070	62-73	3-5	12T - ID: 3.874"
4B	019701-100	NA	Front - selective	.040	62-73	AR	12T - ID: 3.874"
4B	019701A	NA	Front - thin	.060	62-73	AR	12T - ID: 3.874"
6D	019703	6256553	Reverse	.070	62-73	4-6	6T - ID: 5.727"
6D	019703-150	NA	Reverse - selective	.060	62-73	AR	6T - ID: 5.727"
6D	019703-200	NA	Reverse - selective	.078	62-73	AR	6T - ID: 5.727"
6D	019703-228	NA	Reverse - selective	.090	62-73	AR	6T - ID: 5.727"
6D	019703-254	NA	Reverse - selective	.100	62-73	AR	6T - ID: 5.727"
6D	019703-280	NA	Reverse - selective	.110	62-73	AR	6T - ID: 5.727"

STEEL CLUTCHES - HI-PERFORMANCE - Kolene®

ILL	ALTO No.	REF No.	Description	Spec	Year	Qty	Notes
4B	019701K	NA	Front	.070	62-73	3-5	Kol - 12T - ID: 3.874"
4B	019701HK	NA	Front with Turbulator Holes	.070	62-73	3-5	Kol - 12T - ID: 3.874"
4B	019701AK	NA	Front - thin	.060	62-73	AR	Kol - 12T - ID: 3.874"
4B	019701AHK	NA	Front - thin with Turbulator Holes	.060	62-73	AR	Kol - 12T - ID: 3.874"
6D	019703K	NA	Reverse	.070	62-73	4-6	Kol - 6T - ID: 5.727"
6D	019703K150	NA	Reverse - selective	.060	62-73	AR	Kol - 6T - ID: 5.727"
6D	019703K200	NA	Reverse - selective	.078	62-73	AR	Kol - 6T - ID: 5.727"
6D	019703K228	NA	Reverse - selective	.090	62-73	AR	Kol - 6T - ID: 5.727"
6D	019703K254	NA	Reverse - selective	.100	62-73	AR	Kol - 6T - ID: 5.727"
6D	019703K280	NA	Reverse - selective	.110	62-73	AR	Kol - 6T - ID: 5.727"

STEEL CLUTCHES - HI-PERFORMANCE - UNIT PACKS (ONE Rebuild)

ILL	ALTO No.	REF No.	Description	Spec	Year	Qty	Notes
KT	019701KUP5	NA	Front Clutch Steels	.070	62-73	1	5 Kolene® Steels
KT	019701AKUP8	NA	Front Clutch Steels - thin	.060	62-73	1	8 Kolene® Steels
KT	019703KUP5	NA	Reverse	.070	62-73	1	5 Kolene® Steels

OEI® Original Equipment Improvements

ILL	ALTO No.	REF No.	Description	Spec	Year	Qty	Notes
18F	019203X	3789009HP	Case, Rear oversize for better output shaft support	.781	62-73	1	
KT	019300UP6	NA	Kit, Reverse CaseSaver™ Clips		62-73	1	Contains 6 Clips
KT	019756A	NA	Front Clutch PowerPack® (1 sided frictions) Hi-Performance		62-73	1	Red Eagle®
KT	019755HP	NA	Front Clutch PowerPack® Hi-Performance		62-73	1	Red Eagle®
KT	019756	NA	Front Clutch PowerPack® - inertia		62-73	1	
KT	019711KUP1	NA	Front - Kolene w/ 6 separators	.070	62-73	1	1 Kolene® Steel
KT	019757	NA	Front Clutch Anti-Drag PowerPack®		62-73	1	
KT	019758	NA	Reverse Clutch Anti-Drag PowerPack®		62-73	1	
KT	019713KUP1	NA	Reverse - Kolene w/ 6 separators	.070	62-73	1	1 Kolene® Steel
KT	019985	PG-2S	VB Shift Kit®	Transgo®	62-73	1	Standard, Tow & Competition

GENERAL MOTORS
POWERGLIDE ALUMINUM CASE
1962-73

PRESSURE PLATES

ILL	ALTO No.	REF No.	Description	Spec	Year	Qty	Notes
N I	019761A800	NA	Reverse	.317	62-73	1	6T - ID: 5.719"

BANDS - HI-PERFORMANCE - Red Eagle® or Carbonite®

ILL	ALTO No.	REF No.	Description	Spec	Year	Qty	Notes
7B	019960	NA	Band Low Brake - Split Heavy Duty	Red	62-73	1	Red Eagle®
7B	019960C	NA	Band Low Brake - Split Super Duty	Crb	62-73	1	Carbonite®
7B	019961	NA	Band Low Brake - Split Heavy Duty 2.245" Wide - Offset Lugs	Red	62-73	1	Red Eagle®
7B	019961K	NA	Band Low Brake - Split Super Duty 2.245" Wide - Offset Lugs	Kevlar®	62-73	1	Kevlar®
7B	019961C	NA	Band Low Brake - Split Super Duty 2.245" Wide - Offset Lugs	Crb	62-73	1	Carbonite®
7B	019963	NA	Band Low Brake - Split Heavy Duty 2.245" Wide - Offset Lugs without Strut Bar	Red	62-73	1	Red Eagle®
7B	019963K	NA	Band Low Brake - Split Super Duty 2.245" Wide - Offset Lugs without Strut Bar	Kevlar®	62-73	1	Kevlar®

FILTERS

ILL	ALTO No.	REF No.	Description	Spec	Year	Qty	Notes
8G	019942A	6263005	Filter - square		62-73	1	

METAL CLAD SEALS

ILL	ALTO No.	REF No.	Description	Spec	Year	Qty	Notes
9A	032400	8626916	Front Pump	Silicone	62-73	1	
9A	055400	23015975	Front Pump	Vamac®	62-73	1	
10F	032402	1243402	Extension Housing with Flange		62-73	1	

SEALING RINGS

ILL	ALTO No.	REF No.	Description	Spec	Year	Qty	Notes
KT	019600	C309K	Sealing Ring Kit		62-73	1	
11A	018101	3689808	Front Pump stator to Front drum	Metal	62-73	2	
11A	018101X	3689808	Front Pump stator to Front drum	Chrome	62-73	2	
12C	018102	3817715	Input shaft	Metal	62-73	2	
13F	018101	3689808	Governor Hub	Metal	62-73	2	
14F	019102	3789084	Low Servo	Metal	62-73	1	

MODULATORS

ILL	ALTO No.	REF No.	Description	Spec	Year	Qty	Notes
15G	019509	5638205	Modulator - fully adjustable		62-73	1	

BUSHINGS

ILL	ALTO No.	REF No.	Description	Spec	Year	Qty	Notes
KT	032630	NA	Short Bushing Kit		62-73	1	
16A	032200	8623940	Front Pump Body	.613	62-73	1	
17B	019201	3840760	High Clutch drum	.500	62-73	1	
18F	019203	3789009	Case, Rear	.531	62-73	1	
18F	019203X	3789009HP	Case, Rear oversize for better output shaft support	.781	62-73	1	
19F	019204	3789877	Governor Support (Rear Pump)	.461	62-73	1	can use 043204
20C	032206	3789034	Output shaft - pilot		62-73	1	
21F	032208	6260048	Extension Housing		62-73	1	

GENERAL MOTORS

POWERGLIDE ALUMINUM CASE

1962-73

HARD PARTS

ILL	ALTO No.	REF No.	Description	Spec	Year	Qty	Notes
NI	019053	NA	Dumbell Steel Plate Separator		62-73	1	

GENERAL MOTORS

DOUG NASH MK2, MH5

1984-88

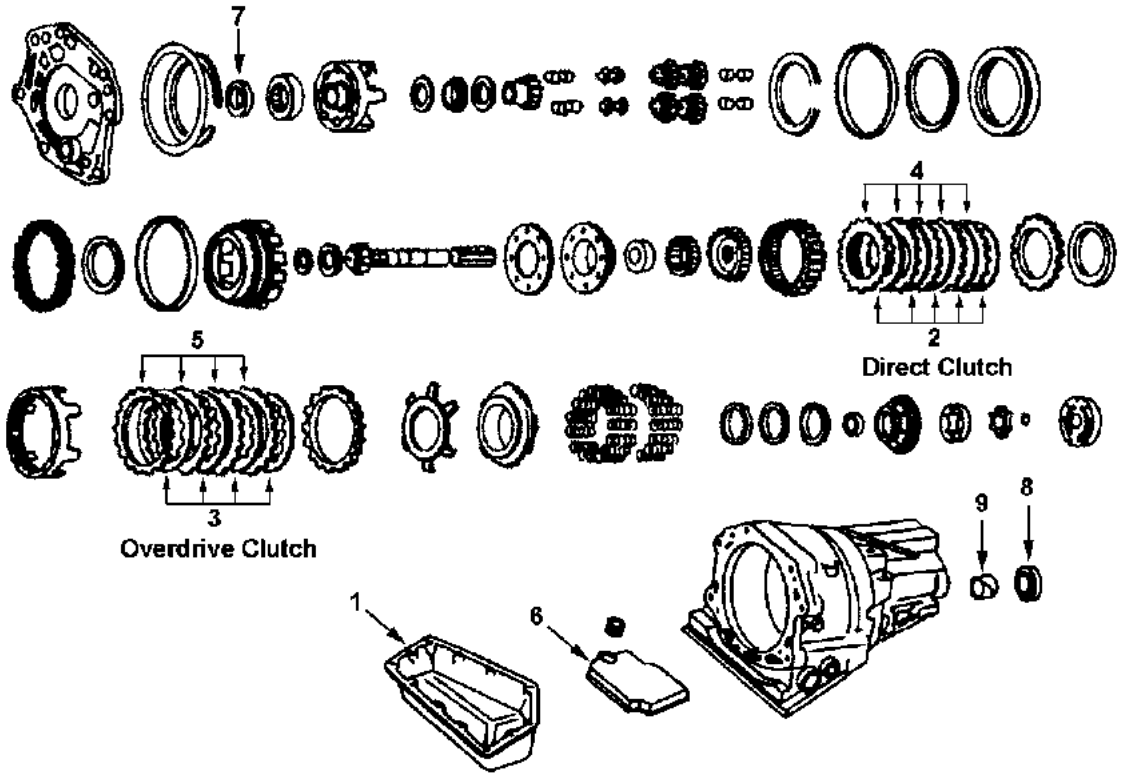

KITS

***Add Suffix SK for Super Kit**

ILL	Description	Years	Friction Module	Steel Module	Overhaul Kit	Banner Kit	Master Kit
KT	Rebuilding Kit	84-88	087752	087753	087800	087901LS	087901

MISCELLANEOUS GASKETS & KIT COMPONENTS

ILL	ALTO No.	REF No.	Description	Spec	Year	Qty	Notes
1	087816	NA	Gasket, Oil Pan	Fiber	84-88	1	

FRICTION CLUTCHES

ILL	ALTO No.	REF No.	Description	Spec	Year	Qty	Notes
2	087700	14081192	Direct	.072	84-85	5-6	Tan - 48T - OD: 5.279" - SM
2	087710	14105930	Direct	.072	86-88	5-6	Tan - 48T - OD: 5.279" - PLI
3	087702	14082705	Overdrive	.092	84-85	4-5	Tan - 30T - OD: 6.560" - SM
3	087712	14105933	Overdrive	.092	86-88	4	Tan - 30T - OD: 6.560" - PLI

STEEL CLUTCHES

ILL	ALTO No.	REF No.	Description	Spec	Year	Qty	Notes
4	087701	14081193	Direct	.071	84-85	5-6	30T - ID: 4.103"
4	087711	14105931	Direct	.061	86-88	4	30T - ID: 4.103"
4	087721	14105941	Direct - selective	.051	84-88	AR	30T - ID: 4.103"
5	087703	14082706	Overdrive	.071	84-85	4	24T - ID: 5.696"
5	087713	14105934	Overdrive	.061	86-88	5	24T - ID: 5.696"

GENERAL MOTORS

DOUG NASH MK2, MH5

1984-88

FILTERS (add Prefix FK for FILTER KIT)

ILL	ALTO No.	REF No.	Description	Spec	Year	Qty	Notes
6	023944B	14082735	Filter		84-88	1	

METAL CLAD SEALS

ILL	ALTO No.	REF No.	Description	Spec	Year	Qty	Notes
7	087400	14082784	Input		84-88	1	
8	032402	8673526	Output		84-88	1	

BUSHINGS

ILL	ALTO No.	REF No.	Description	Spec	Year	Qty	Notes
9	032208	6260048	Bushing, case		84-88	1	

GENERAL MOTORS

3T40 TH125, TH125C
1980-On

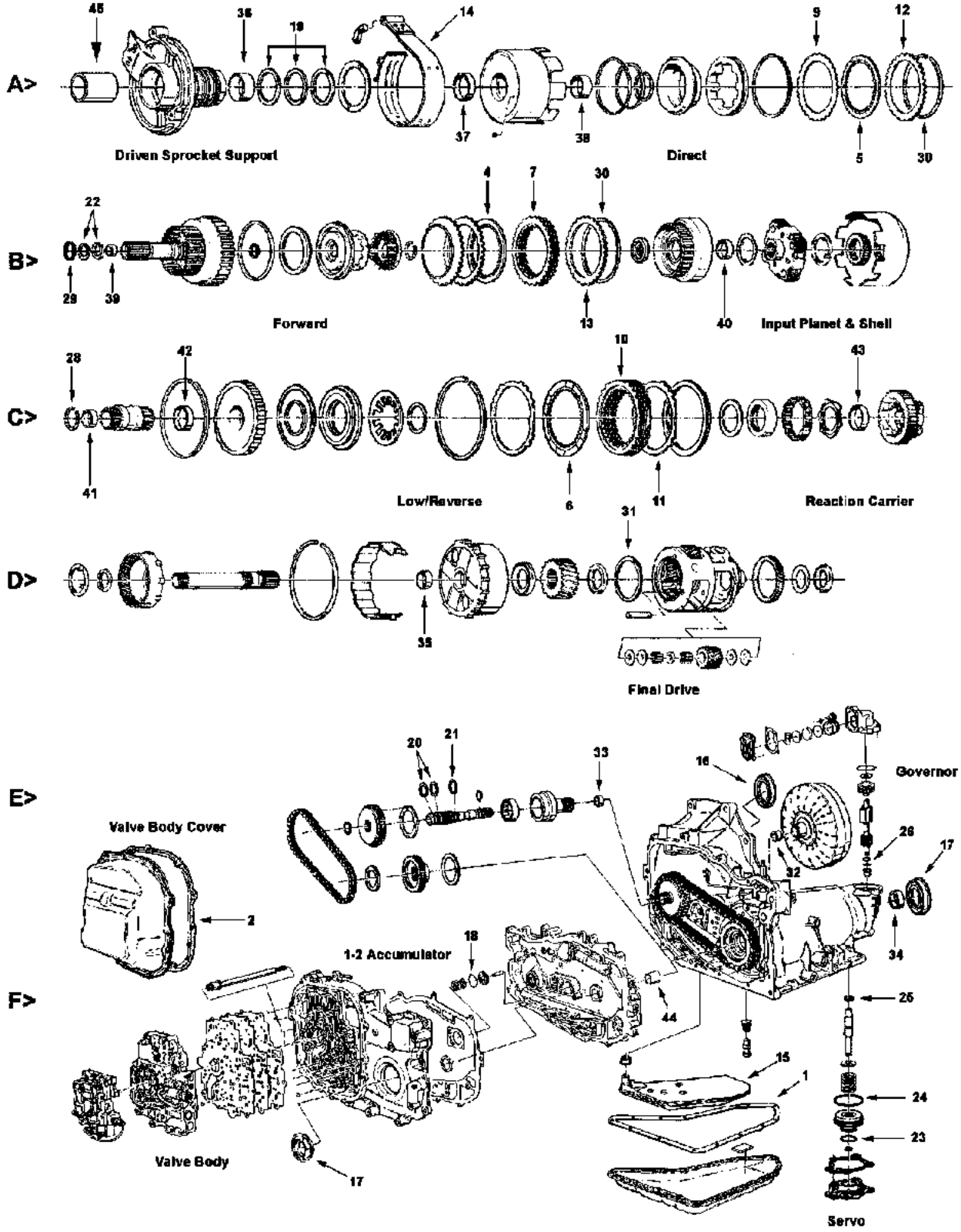

GENERAL MOTORS

3T40 TH125, TH125C

1980-On

KITS

*Add Suffix SK for Super Kit

ILL	Description	Years	Friction Module	Steel Module	Overhaul Kit	Banner Kit	Master Kit
KT	Rebuilder Kit (without Servo lipseals)	80-84	048752	048753	048800	048901LS	048901
KT	Rebuilder Kit (with Servo lipseals)	85-On	048752A	048753A	048802	048903LS	048903

KITS - HI-PERFORMANCE Red Eagle®

ILL	Description	Years	Friction Module	Steel Module	Overhaul Kit	Banner Kit	Master Kit
KT	Rebuilder Kit	80-84	048752HP	048753HP	048800	048901HPLS	048901HP

MISCELLANEOUS GASKETS & KIT COMPONENTS

ILL	ALTO No.	REF No.	Description	Spec	Year	Qty	Notes
1F	048816	8631338	Gasket, Oil Pan	Cork/Rub	80-On	1	except AWD
2F	048818	8660039	Gasket, Side Cover	Cork/Rub	80-On	1	except AWD
KT	TBA	NA	Kit, External Seal		80-On	1	
KT	TBA	NA	Kit, Intermediate servo lipseals		85-On	1	
NI	032072	1259475	Filler Tube Seal		80-On	1	
NI	032071	25518260	Detent Seal		80-On	1	

FRICTION CLUTCHES

ILL	ALTO No.	REF No.	Description	Spec	Year	Qty	Notes
4B	048700	8661380	Forward	.080	80-84	4	HEG - 32T - OD: 4.643" - SM
4B	048710	8660168	Forward	.069	85-On	4-5	HEG - 32T - OD: 4.643" - SM
5A	048700	8661380	Direct	.080	80-84	4	HEG - 32T - OD: 4.643" - SM
5A	048710	8660168	Direct	.069	85-On	4-5	HEG - 32T - OD: 4.643" - SM
6C	048702	8652029	Low/Reverse	.080	80-84	5	Tan - 40T - OD: 5.372" - SM
6C	048712	8677034	Low/Reverse	.090	85-On	5	Tan - 40T - OD: 5.372" - SM

FRICTION CLUTCHES - HI-PERFORMANCE - Red Eagle®

ILL	ALTO No.	REF No.	Description	Spec	Year	Qty	Notes
4B	048740	NA	Forward & Direct	.080	80-84	4	Red - 32T - OD: 4.643" - SM
4B	048744	NA	Forward & Direct	.069	85-On	4-5	Red - 32T - OD: 4.643" - SM
6C	048742	NA	Low/Reverse	.080	80-84	5	Red - 40T - OD: 5.371" - SM
6C	048746	NA	Low/Reverse	.090	85-On	5	Red - 40T - OD: 5.372" - SM

FRICTION CLUTCHES - HI-PERFORMANCE - UNIT PACKS (ONE Rebuild)

ILL	ALTO No.	REF No.	Description	Spec	Year	Qty	Notes
KT	048740UP4	NA	UNIT PACK - Forward & Direct	.080	80-84	1	4 Red Eagle® Frictions
KT	048742UP5	NA	UNIT PACK - Low/Reverse	.080	80-84	1	5 Red Eagle® Frictions

STEEL CLUTCHES

ILL	ALTO No.	REF No.	Description	Spec	Year	Qty	Notes
7B	048701	8683084	Forward	.076	80-On	3-4	26T - ID: 3.517"
NI	048707	8675257	Forward - wave	.050	80-On	1-2	26T - ID: 3.517"
9A	048703	8631026	Direct	.090	80-On	4	24T - ID: 3.517"
10C	048705	8631079	Low/Reverse	.080	80-84	5	11T - ID: 4.375"
10C	048715	8652027	Low/Reverse	.088	85-On	4	11T - ID: 4.375"
11C	048709	8637574	Low/Reverse - wave	.070	80-84	1	11T - ID: 4.375"
11C	048719	8664141	Low/Reverse - wave	.078	80-On	1-2	11T - ID: 4.375"

STEEL CLUTCHES - HI-PERFORMANCE - Kolene®

ILL	ALTO No.	REF No.	Description	Spec	Year	Qty	Notes
7B	048701K	NA	Forward	.076	80-On	3-4	Kol - 26T - ID: 3.517"

GENERAL MOTORS

3T40 TH125, TH125C

1980-On

STEEL CLUTCHES - HI-PERFORMANCE - Kolene®

ILL	ALTO No.	REF No.	Description	Spec	Year	Qty	Notes
9A	048703K	NA	Direct	.090	80-On	4	Kol - 24T - ID: 3.517"
10C	048705K	NA	Low/Reverse	.080	80-84	5	Kol - 11T - ID: 4.375"

STEEL CLUTCHES - HI-PERFORMANCE - UNIT PACKS (ONE Rebuild)

ILL	ALTO No.	REF No.	Description	Spec	Year	Qty	Notes
KT	048701KUP3	NA	UNIT PACK - Forward	.076	80-On	1	3 Kolene® Steels
KT	048703KUP4	NA	UNIT PACK - Direct	.090	80-On	1	4 Kolene® Steels
KT	048705KUP5	NA	UNIT PACK - Low/Reverse	.080	80-84	1	5 Kolene® Steels

PRESSURE PLATES

ILL	ALTO No.	REF No.	Description	Spec	Year	Qty	Notes
12A	TBA	8652562	Direct clutch backing (4.74-4.84mm)		85-On	1	Step type
13B	TBA	8637881	Forward clutch backing (5.29-5.39mm)		82-86	1	
13B	TBA	8664160	Forward clutch backing (4.862-5.012mm)		87-On	1	
13B	TBA	8664161	Forward clutch backing (4.307-4.457mm)		87-On	1	
13B	TBA	8664162	Forward clutch backing (3.752-3.902mm)		87-On	1	
13B	TBA	8664163	Forward clutch backing (3.197-3.347mm)		87-On	1	

OEI® Original Equipment Improvements

ILL	ALTO No.	REF No.	Description	Spec	Year	Qty	Notes
KT	048985	SK® 125	Shift Kit® - corrects 3-2 clunk		80-On	1	Transgo

BANDS

ILL	ALTO No.	REF No.	Description	Spec	Year	Qty	Notes
14A	048951	8635538	Intermediate (Flex	1.750	82-On	1	

FILTERS

ILL	ALTO No.	REF No.	Description	Spec	Year	Qty	Notes
15F	048940	8666665	Filter (with seal)		80-On	1	

METAL CLAD SEALS

ILL	ALTO No.	REF No.	Description	Spec	Year	Qty	Notes
16E	048400	8685515	Front Pump	Vamac®	80-On	1	
17F	048401	24202835	Axle (Left & Right)		80-On	2	
NI	048402	8637588	Manual Lever		80-83	1	
NI	048402A	8644709	Manual Lever		84-On	1	

SEALING RINGS

ILL	ALTO No.	REF No.	Description	Spec	Year	Qty	Notes
KT	048600	NA	Sealing Ring Kit - Combo (17T)		80-On	1	
18F	048100	NA	1-2 Accumulator piston	Metal	80-On	1	
18F	048100A	8631895	1-2 Accumulator piston	Teflon	80-On	1	
19A	048101	8652535	Driven Sprocket support	Teflon	80-On	3	
19A	048101X	NA	Driven Sprocket support	Metal	80-On	3	
20E	048102	8631211	Turbine Shaft (scarf cut)	Teflon	80-81	1-3	
20E	048110	8643058	Turbine Shaft (solid) - front	Teflon	82-On	2	will retro-fit
21E	048111	8637170	Turbine Shaft (solid) - middle	Teflon	82-On	1	
22B	048103	8652535	Input Shaft	Teflon	80-On	2-3	
22B	048103X	NA	Input Shaft	Metal	80-On	2-3	
23F	048104	8631468	Intermediate Servo piston - inner (1.260")	Teflon	80-81	1	

GENERAL MOTORS

3T40 TH125, TH125C

1980-On

SEALING RINGS

ILL	ALTO No.	REF No.	Description	Spec	Year	Qty	Notes
23F	048114	8631469	Intermediate Servo piston - inner (1.500")	Teflon	82-85	1	
23F	048109	8631470	Intermediate Servo piston - inner (1.675")	Teflon	82-85	1	
24F	043109	8631473	Intermediate Servo piston - outer	Teflon	80-85	1	
24F	043109X	NA	Intermediate Servo piston - outer	Metal	80-85	1	
25F	048106	8631105	Intermediate Servo apply pin	Teflon	80-On	1	
26E	048107	8632588	Governor	Teflon	80-On	1	
NI	048108	8631417	Pump Slide to cover	Teflon	80-On	1	

SNAP RINGS

ILL	ALTO No.	REF No.	Description	Spec	Year	Qty	Notes
KT	048680	NA	Snap Ring Kit		80-On	1	
KT	048251-091	NA	Snap Ring Kit		80-On	1	

BUSHINGS

ILL	ALTO No.	REF No.	Description	Spec	Year	Qty	Notes
KT	048625	NA	Bushing Kit		80-On	1	
32E	048200	8631907	Converter Hub		80-81	1	
32E	048200A	8637905	Converter Hub		82-On	1	
33A	043201	8628915	Drive Sprocket support to turbine shaft		80-On	1	
34F	048202	8631119	Output Shaft		80-On	1	
35D	048202	8631119	Case to Final drive Internal gear		80-On	1	
36A	048203	8631900	Driven Sprocket support to input drum		80-On	1	
37A	048204	8631902	Direct Clutch drum - Front		80-On	1	
38A	048205	8631901	Direct Clutch drum - Rear		80-On	1	
39B	048206	8631903	Input Shaft		80-On	1	
40B	048207	8631904	Input Internal gear		80-On	1	
41C	048208	8631906	Reaction Sun gear		80-On	1	
42C	048209	8631905	Reaction Carrier		80-On	1	
43C	048209	8631905	Low/Reverse clutch housing		80-On	1	
44F	048210	NA	Case cover sleeve (channel plate)		80-On	1	
45A	048211	NA	Driven Sprocket support sleeve		80-On	1	

WASHERS

ILL	ALTO No.	REF No.	Description	Spec	Year	Qty	Notes
KT	048635	NA	Washer Kit		80-On	1	

MISCELLANEOUS

ILL	ALTO No.	REF No.	Description	Spec	Year	Qty	Notes
NI	TBA	8643931	Axle Stablizer kit (bearing type)		80-On	1	

GENERAL MOTORS

4T40E 1995-On
4T45E 1998-On

A>

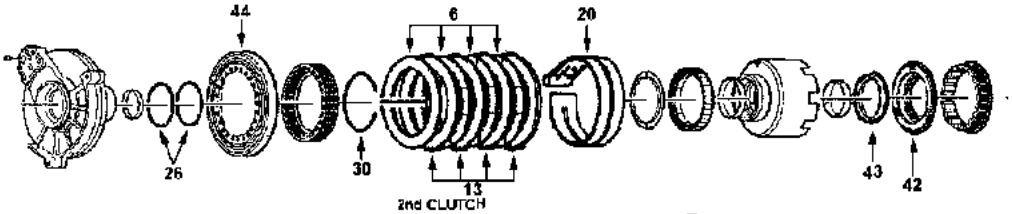

B>

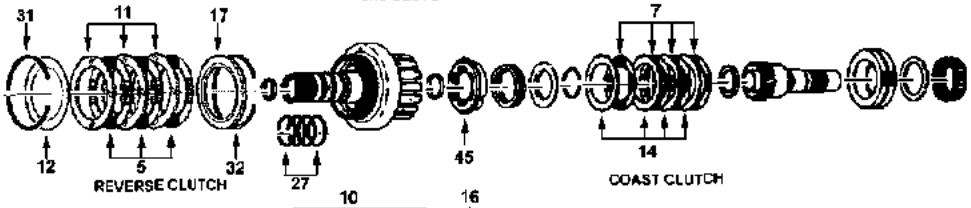

C>

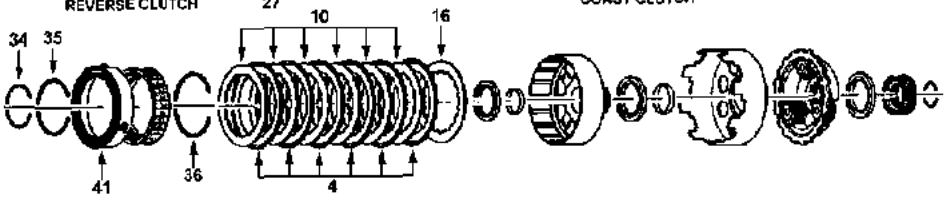

D>

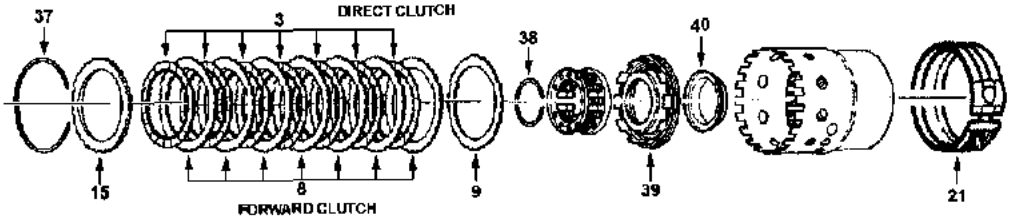

E>

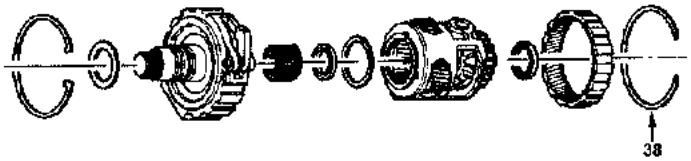

F>

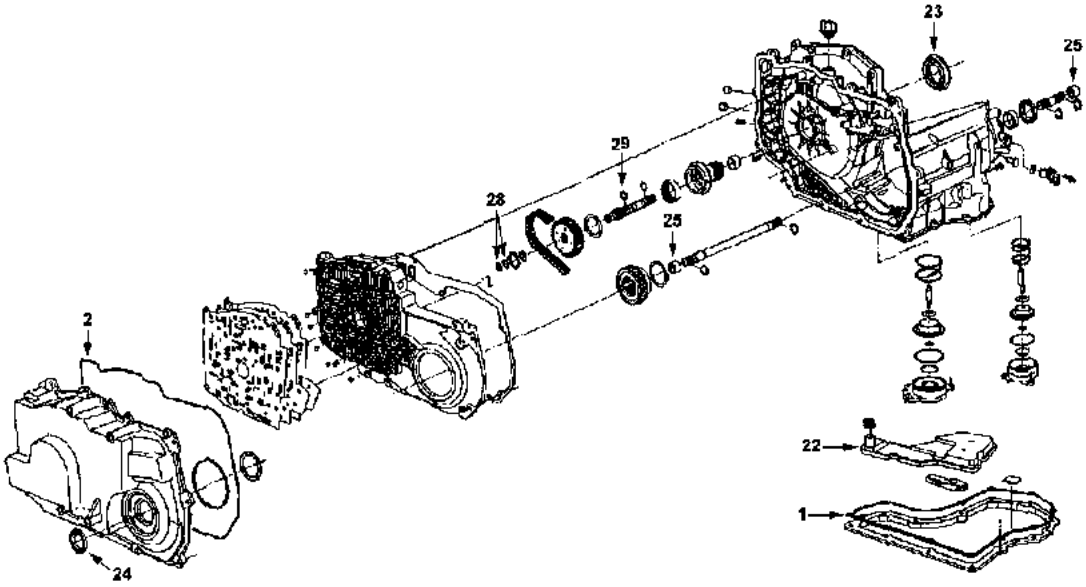

GENERAL MOTORS

4T40E 1995-On
4T45E 1998-On

KITS

*Add Suffix SK for Super Kit

ILL	Description	Years	Friction Module	Steel Module	Overhaul Kit	Banner Kit	Master Kit
KT	Rebuilding Kit - with 7 Pistons	95-On	114752	114753	114800	114901LS	114901
KT	Rebuilding Kit - without Molded Pistons	95-On	114752	114753	114800A	114901XLS	114901X
KT	Rebuilding Kit - Turbulator Steels & 7 Pistons	98-On	114752	114753A	114800	114901LS	114901A

MISCELLANEOUS GASKETS & KIT COMPONENTS

ILL	ALTO No.	REF No.	Description	Spec	Year	Qty	Notes
1F	114816	24203590	Gasket, Oil Pan	M. Rubber	95-On	1	
2F	114818	24200478	Gasket, Side Cover	M. Rubber	95-On	1	

FRICTION CLUTCHES

ILL	ALTO No.	REF No.	Description	Spec	Year	Qty	Notes
3D	114700	24209729	Forward	.070	95-On	7	Tan - 30T - OD: 5.000" - PL
4C	114702	24209727	Direct (external teeth)	.070	95-On	6	HEG - 36T - ID: 3.927" - SM
5B	114704	24209379	Reverse Input	.070	95-On	3	Tan - 48T - OD: 5.305" - SM
6A	114706	24209723	2nd Clutch	.070	95-On	3	Tan - 36T - OD: 6.578" - SM
7B	114708	24209726	Coast Clutch	.070	95-On	4	Tan - 20T - OD: 3.275" - PL

STEEL CLUTCHES

ILL	ALTO No.	REF No.	Description	Spec	Year	Qty	Notes
8D	114701	8644444	Forward	.069	95-On	7	30T - ID: 4.075"
9D	114701W100	24200467	Forward - wave	.039	95-02	1	8T - ID: 4.075"
10C	114703	8685879	Direct (internal teeth)	.074	95-On	6	16T - OD: 4.965"
11B	114705	24200757	Reverse Input	.088	95-97	3	30T - ID: 3.995"
11B	114705H	24207081	Reverse Input with Turbulator holes	.088	98-On	3	30T - ID: 3.995"
12B	114705W110	24200466	Reverse Input - wave	.043	95-02	1	30T - ID: 3.995"
12B	114705WA110	24223015	Reverse Input - wave		03-On	1	30T - ID: 3.995"
13A	114707	24200790	2nd Clutch	.089	95-On	3	8T - ID: 4.793"
18A	114769	24200298	2nd Clutch - wave		95-On	1	OD: 6.727" - ID: 5.037"
14B	114709	8685874	Coast	.069	95-On	4	12T - ID: 2.442"

PRESSURE PLATES

ILL	ALTO No.	REF No.	Description	Spec	Year	Qty	Notes
15D	114760	24200595	Forward - backing	.118	95-On	1	
16C	TBA	8685875	Direct - backing		95-On	1	
17B	TBA	24200756	Reverse Input - backing	.199	95-On	AR	
17B	TBA	24200950	Reverse Input - backing	.177	95-On	AR	
17B	TBA	24200951	Reverse Input - backing	.222	95-On	AR	
19A	TBA	8684324	2nd Clutch - backing		95-98	1	
19A	TBA	24209271	2nd Clutch - backing		99-On	1	

BANDS

ILL	ALTO No.	REF No.	Description	Spec	Year	Qty	Notes
20A	114950	8684403	Intermediate (2-4) overdrive	Tan	95-On	1	
21E	062951A	8651614	Forward (Low/Reverse)	Tan	95-On	1	Double wrap MAJI

FILTERS

ILL	ALTO No.	REF No.	Description	Spec	Year	Qty	Notes
22F	114940	8685185	Filter		95-On	1	

METAL CLAD SEALS

GENERAL MOTORS

4T40E 1995-On
4T45E 1998-On

METAL CLAD SEALS

ILL	ALTO No.	REF No.	Description	Spec	Year	Qty	Notes
23E	048400	8685515	Converter		95-On	1	
24F	114425	24201936	Axle LH & RH		95-On	2	
25F	114426	8684482	Axle - inner sleeve		95-On	2	
N I	048402A	8644709	Manual Lever		95-On	1	

SEALING RINGS

ILL	ALTO No.	REF No.	Description	Spec	Year	Qty	Notes
KT	114600	NA	Sealing Ring Kit - 9T		95-On	1	
26A	114100	24201613	Driven Sprocket Support		95-On	2	
N I	114101	24204223	Forward		95-On	2	
27B	114102	8684272	Input Shaft (Direct drum)		95-On	4	
28F	048110	8643058	Turbine Shaft (Front)		95-On	2	
29F	048111	8637170	Turbine Shaft - middle		95-On	1	
N I	048108	8631417	Pump Slide		95-On	1	

ELECTRONIC CONTROL COMPONENTS

ILL	ALTO No.	REF No.	Description	Spec	Year	Qty	Notes
N I	114501	96041868	Solenoid EPC (BW)		95-03	1	
N I		10478146					
N I	114501A	24225825	Solenoid EPC		04-On	1	

PISTONS

ILL	ALTO No.	REF No.	Description	Spec	Year	Qty	Notes
KT	114670	NA	Piston Kit		95-On	1	contains 7 pistons
39D	114330	24208641	Molded Piston - Forward	M. Rubber	95-On	1	
40D	114330A	24208642	Molded Piston - Forward sleeve	M. Rubber	95-On	1	
41C	114332	24205044	Molded Piston - Direct	M. Rubber	95-On	1	
42A	114333	24205040	Molded Piston - Reverse Input	M. Rubber	95-On	1	
43A	114333A	24205041	Molded Piston - Reverse Input sleeeve	M. Rubber	95-On	1	
44A	114331	24205042	Molded Piston - 2nd Clutch	M. Rubber	95-On	1	
45B	114334	24205043	Molded Piston - Coast Clutch	M. Rubber	95-On	1	

HARD PARTS

ILL	ALTO No.	REF No.	Description	Spec	Year	Qty	Notes
NI	114350	NA	Oil Pan 4T40E		95-On	1	

GENERAL MOTORS

4L40E, 5L40E, 5L50E 1999-On
A5S390R, A5S360R

KITS

*Add Suffix SK for Super Kit

ILL	Description	Years	Friction and Steel Module	Overhaul Kit	Banner Kit	Master Kit
KT	Rebuilding Kit - 4L40E, 5L40E, 5L50E	99-On	156750	156800B	NA	156901B
KT	Rebuilding Kit - 4L40E, 5L40E, 5L50E	99-On	156750	156800X	NA	156901BX
KT	Rebuilding Kit - BMW. CADILLAC AWD	99-On	156750A	156800A	NA	156901A
KT	Rebuilding Kit - BMW, CADILLAC AWD without Molded Pistons	99-On	156750A	156800X	NA	156901AX
KT	Clutch Plate Module	02-On	156750C	NA	NA	NA
KT	Overhaul Kit with Combo 14 Molded Piston Kit - all applications	99-On		156800	NA	NA

MISCELLANEOUS GASKETS & KIT COMPONENTS

ILL	ALTO No.	REF No.	Description	Spec	Year	Qty	Notes
N I	156816	24117524707	Oil Pan Gasket	Met/Rub.	99-On	1	

FRICTION CLUTCHES

ILL	ALTO No.	REF No.	Description	Spec	Year	Qty	Notes
N I	156700-160	96020156	Direct (1 sided) - internal spline	.063/1.6	99-On	4-5	HEG - 36T - OD: 6.796" - SB
N I	156701-160	96020157	Direct (1 sided) - external spline	.063/1.6	99-On	4-5	HEG - 36T - ID: 6.107" - SB
N I	156702-160	96020209	Overdrive (1 sided) - internal spline	.063/1.6	99-On	2-3	HEG - 36T - OD: 7.062" - SB
N I	156703-160	96020210	Overdrive (1 sided) - external spline	.063/1.6	99-On	2-3	HEG - 36T - ID: 6.464" - SB
N I	156704-160	96020322	Coast (1 sided) - internal spline	.063/1.6	99-On	3	HEG - 24T - OD: 4.848" - SB
N I	156705-160	96020323	Coast (1 sided) - external spline	.063/1.6	99-On	3	HEG - 12T - ID: 4.126" - SB
N I	156706-160	96020326	Forward (1 sided) - internal spline	.063/1.6	99-On	4	HEG - 24T - OD: 5.111" - SB
N I	156707-160	96020327	Forward (1 sided) - external spline	.063/1.6	99-On	4	HEG - 24T - ID: 4.126" - SB
N I	156702-160	96020209	Reverse (1 sided) - internal spline	.063/1.6	99-On	2-3	HEG - 36T - OD: 7.062" - SB
N I	156703-160	96020210	Reverse (1 sided) - external spline	.063/1.6	99-On	2-3	HEG - 36T - ID: 6.464" - SB
N I	156710-160	96020684	Intermediate (1 sided)- internal spline	.063/1.6	99-On	3-4	HEG - 24T - OD: 5.307" - SB
N I	156711-160	96020685	Intermediate (1 sided) - external spline	.063/1.6	99-On	3-4	HEG - 24T - ID: 4.122" - SB
N I	156700-160	96020156	Lo/Reverse (1 sided) - internal spline	.063/1.6	99-On	5-6	HEG - 36T - OD: 6.796" - SB
N I	156713-160	96020780	Lo/Reverse (1 sided) - external spline	.063/1.6	99-On	5-6	HEG - 29T - ID: 6.107" - PLI
N I	156700-160	96020156	2nd Coast (1 sided)- internal spline	.063/1.6	99-On	3	HEG - 36T - OD: 6.796" - SB
N I	156701-160	96020157	2nd Coast (1 sided)- external spline	.063/1.6	99-On	3	HEG - 36T - ID: 6.107" - SB
N I	156714-160	NA	2nd Coast (1 sided)- internal spline BMW, Cadillac AWD only	.065/1.65	99-On	2	HEG - 36T - OD: 6.920" - SB
N I	156715-160	NA	2nd Coast (1 sided)- external spline BMW, Cadillac AWD only	.063/1.6	99-On	2	HEG - 6T - ID: 6.426" - SB
N I	156716-160	96022840	2nd Clutch (1 sided)- internal spline	.063/1.6	99-On	6	HEG - 24T - OD: 5.111" - SB
N I	156717-160	96022841	2nd Clutch (1 sided)- external spline	.063/1.6	99-On	6	HEG - 24T - ID: 4.475" - SB
N I	156716A160	NA	2nd Clutch (1 sided) - internal spline BMW, Cadillac AWD only	.063/1.6	99-On	5	HEG - 24T - OD: 5.427" - SB
N I	156717A160	NA	2nd Clutch (1 sided)- external spline BMW, Cadillac AWD only	.063/1.6	99-On	5	HEG - 24T - ID: 4.480" - SB

PRESSURE PLATES

ILL	ALTO No.	REF No.	Description	Spec	Year	Qty	Notes
N I	156762	NA	Direct		99-On	1	
N I	156765	NA	Intermediate cushion spring		99-On	1	

OEI® Original Equipment Improvements

ILL	ALTO No.	REF No.	Description	Spec	Year	Qty	Notes
N I	156757	NA	Kit - Coast clutch matrix aluminum insert		99-On	1	eliminates coast clutch wear

GENERAL MOTORS

4L40E, 5L40E, 5L50E 1999-On
A5S390R, A5S360R

FILTERS

ILL	ALTO No.	REF No.	Description	Spec	Year	Qty	Notes
N I	156940	24722000	Filter - without outlet spacer tube, shallow pan		99-On	1	
N I	156942	24722100	Filter - with outlet spacer tube, deep pan		99-On	1	
N I	156944	24722200	Filter - with outlet spacer, with plastic shroud around intake, deep pan		99-On	1	

SEALING RINGS

ILL	ALTO No.	REF No.	Description	Spec	Year	Qty	Notes
N I	156600T	NA	Sealing Ring Kit - Teflon		99-On	1	

BUSHINGS

ILL	ALTO No.	REF No.	Description	Spec	Year	Qty	Notes
N I	156625	NA	Bushing Kit - Bronze		99-On	1	Bronze
N I	156200X	NA	Bushing - Output Pilot		99-On	1	Bronze
N I	156201X	NA	Bushing - Rear Direct Drum		99-On	1	Bronze
N I	156202X	NA	Bushing - Direct Drum		99-On	1	Bronze
N I	156203X	NA	Bushing - Front Direct Drum		99-On	1	Bronze
N I	156204X	NA	Bushing - Front Stator		99-On	1	Bronze
N I	156205X	NA	Bushing - Rear Planet Carrier		99-On	1	Bronze
N I	156206	NA	Bushing - Reverse teflon coated		99-On	1	
N I	156207X	NA	Bushing - Front Clutch		99-On	1	Bronze
N I	156208X	NA	Bushing - Front Planet Carrier		99-On	1	Bronze

WASHERS

ILL	ALTO No.	REF No.	Description	Spec	Year	Qty	Notes
N I	156635	NA	Washer Kit (8 washers)		99-On	1	

ELECTRONIC CONTROL COMPONENTS

ILL	ALTO No.	REF No.	Description	Spec	Year	Qty	Notes
N I	062504	24212690	Solenoid TCC/PWM (BW)		99-On	1	
N I	114501	96041868	Solenoid EPC (BW)		99-03	1	
N I		10478146					
N I	114501A	24225825	Solenoid EPC		04-On	1	

PISTONS

ILL	ALTO No.	REF No.	Description	Spec	Year	Qty	Notes
KT	156670	NA	Kit, Molded Pistons Combo all applications		99-On	1	14 pistons
KT	156670B	NA	Kit, Molded Pistons BMW, CAD 2WD		99-On	1	11 pistons
KT	156670A	NA	Kit, Molded Pistons AWD		99-On	1	9 pistons
N I	156301	NA	Piston Direct Clutch, ALL		99-On	1	
N I	156302	NA	Piston Reverse Clutch, ALL		99-On	1	
N I	156303	NA	Piston Coast Clutch, ALL		99-On	1	
N I	156304	NA	Piston Overdrive Clutch, AWD		99-On	1	
N I	156304A	NA	Piston Overdrive Clutch, all except AWD		99-On	1	
N I	156304	NA	Piston 2nd Coast Clutch, AWD		99-On	1	
N I	156305	NA	Piston Intermediate Clutch, ALL		99-On	1	
N I	156306	NA	Piston 2nd Coast Clutch, all except AWD		99-On	1	
N I	156307	NA	Piston Low/Reverse Clutch, ALL		99-On	1	
N I	156308	NA	Piston Low/Reverse Clutch, all except AWD		99-On	1	
N I	156311	NA	Piston 2nd Clutch, BMW		99-On	1	
N I	156313	NA	Piston 2nd Clutch, CAD		99-On	1	
N I	156310	NA	Piston 2nd Clutch, AWD		99-On	1	

GENERAL MOTORS

4L40E, 5L40E, 5L50E 1999-On
A5S390R, A5S360R

PISTONS

N I	156312	NA	Piston Forward Clutch, ALL		99-On	1	

HARD PARTS

ILL	ALTO No.	REF No.	Description	Spec	Year	Qty	Notes
N I	156352	NA	Clutch Retainer, Coast		99-On	1	

GENERAL MOTORS

3L30 TH180, TH180C

1969-98

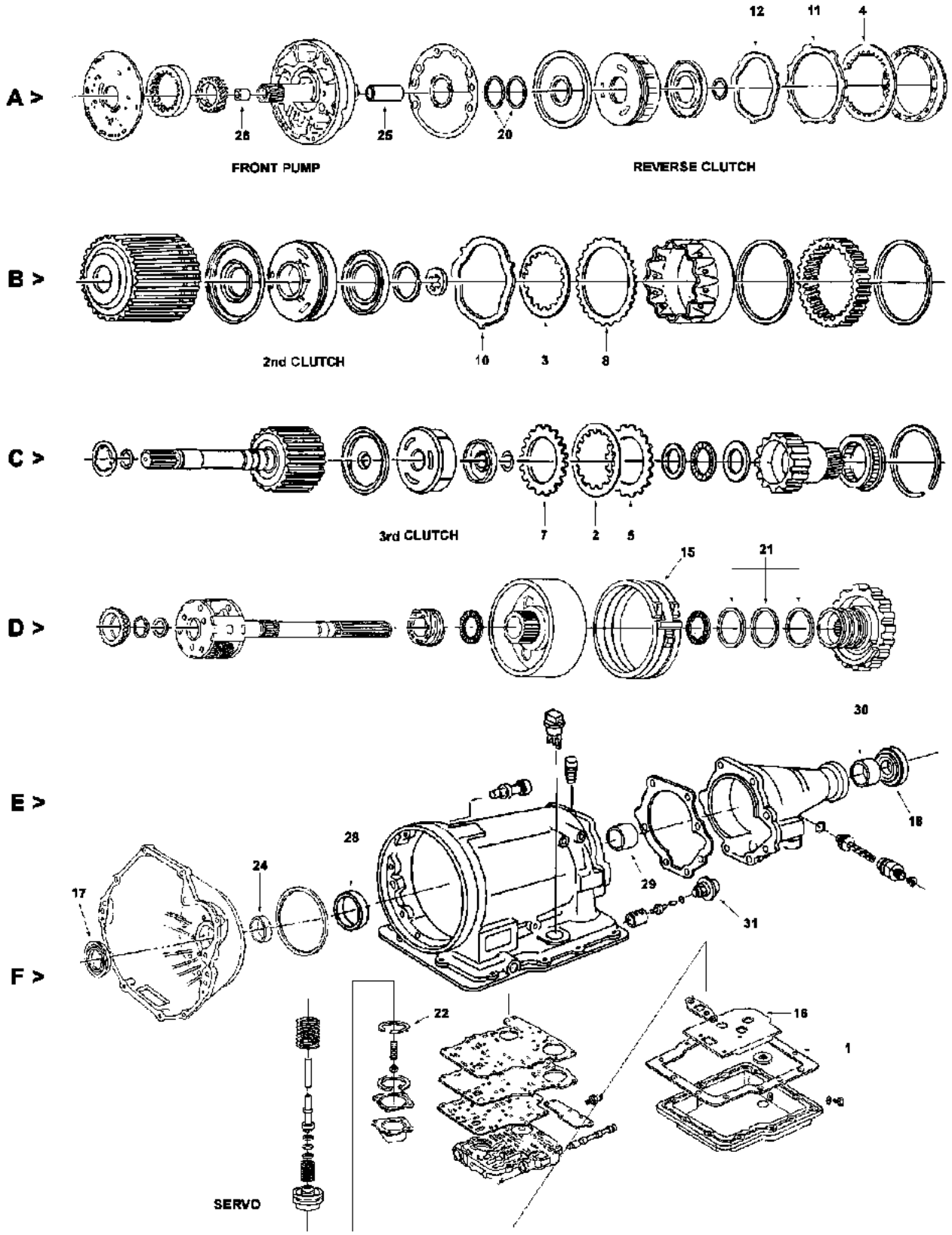

GENERAL MOTORS

3L30 TH180, TH180C

1969-98

KITS

*Add Suffix SK for Super Kit

ILL	Description	Years	Friction Module	Steel Module	Overhaul Kit	Banner Kit	Master Kit
KT	Rebuilder Kit - TH180/C except below	69-98	038752	038753	038800	038903LS	038903
KT	Rebuilder Kit - TH180/C European	69-On	038752A	038753A	038800	038905LS	038905
KT	Rebuilder Kit - TH180/C Holden	69-78	038752C	038753C	038804	038909LS	038909

KITS - HI-PERFORMANCE Red Eagle®

ILL	Description	Years	Friction Module	Steel Module	Overhaul Kit	Banner Kit	Master Kit
KT	Rebuilder Kit - TH180/C European	69-On	038752AHP	038753AHP	038800	038905HPLS	038905HP

MISCELLANEOUS GASKETS & KIT COMPONENTS

ILL	ALTO No.	REF No.	Description	Spec	Year	Qty	Notes
1F	038816	14050668	Gasket, Oil Pan	Cork/Rub	69-98	1	

FRICTION CLUTCHES

ILL	ALTO No.	REF No.	Description	Spec	Year	Qty	Notes
2C	038700	96040597	3rd Clutch	.098	69-98	2-5	HEG - 12T - OD: 3.872" - SM
2C	038700A250	NA	3rd Clutch	.098	69-98	2-5	HEG - 12T - OD: 3.872" - SM
3B	038702	96040584	2nd Clutch	.098	69-98	2-5	HEG - 30T - OD: 5.224" - SM
4A	038704	96040575	Reverse Clutch	.098	69-98	2-5	HEG - 36T - OD: 6.405" - SM

FRICTION CLUTCHES - HI-PERFORMANCE - Red Eagle®

ILL	ALTO No.	REF No.	Description	Spec	Year	Qty	Notes
2C	038740	NA	3rd Clutch	.098	69-98	2-5	Red - 12T - OD: 3.872" - SM
3B	038742	NA	2nd Clutch	.098	69-98	2-5	Red - 30T - OD: 5.224" - SM
4A	038744	NA	Reverse Clutch	.098	69-98	2-5	Red - 36T - OD: 6.405" - SM

FRICTION CLUTCHES - HI-PERFORMANCE - UNIT PACKS (ONE Rebuild)

ILL	ALTO No.	REF No.	Description	Spec	Year	Qty	Notes
KT	038740UP6	NA	UNIT PACK - 3rd Clutch	.098	69-98	1	6 Red Eagle® Frictions
KT	038742UP6	NA	UNIT PACK - 2nd Clutch	.098	69-98	1	6 Red Eagle® Frictions
KT	038744UP6	NA	UNIT PACK - Reverse Clutch	.098	69-98	1	6 Red Eagle® Frictions

STEEL CLUTCHES

ILL	ALTO No.	REF No.	Description	Spec	Year	Qty	Notes
5C	038701	96040595	3rd Clutch	.083	69-98	3-6	30T - ID: 2.848"
5C	038711	5258086	3rd Clutch - Selective	.070	69-98	AR	30T - ID: 2.848"
N I	038701-050	NA	3rd Clutch - Shim	.020	69-98	AR	30T - ID: 2.848"
N I	038701-080	NA	3rd Clutch - Shim	.030	69-98	AR	30T - ID: 2.848"
7C	TBA	96041270	3rd Clutch - wave		69-98	1	3T - ID: 2.848"
8B	038703	96040583	2nd Clutch	.080	69-98	3-6	36T - ID: 4.303"
8B	038713	5258057	2nd Clutch - Selective	.070	69-98	AR	36T - ID: 4.303"
N I	038703-050	NA	2nd Clutch - Shim	.020	69-98	AR	36T - ID: 4.303"
N I	038703-080	NA	2nd Clutch - Shim	.030	69-98	AR	36T - ID: 4.303"
10B	TBA	96040582	2nd Clutch - wave		69-98	1	3T - ID: 4.303"
11A	038705	96040574	Reverse Clutch	.083	69-98	3-6	7T - ID: 5.679"
11A	038715	5258019	Reverse Clutch	.070	69-98	AR	7T - ID: 5.679"

GENERAL MOTORS

3L30 TH180, TH180C

1969-98

STEEL CLUTCHES - HI-PERFORMANCE - Kolene®

ILL	ALTO No.	REF No.	Description	Spec	Year	Qty	Notes
5C	038701K	NA	3rd Clutch	.083	69-98	3-6	Kol - 30T - ID: 2.848"
8B	038703K	NA	2nd Clutch	.080	69-98	3-6	Kol - 36T - ID: 4.303"
11A	038705K	NA	Reverse Clutch	.083	69-98	3-6	Kol - 7T - ID: 5.679"

STEEL CLUTCHES - HI-PERFORMANCE - UNIT PACKS (ONE Rebuild)

ILL	ALTO No.	REF No.	Description	Spec	Year	Qty	Notes
KT	038701KUP6	NA	UNIT PACK - 3rd Clutch	.083	69-98	1	6 Kolene® Steels
KT	038703KUP6	NA	UNIT PACK - 2nd Clutch	.080	69-98	1	6 Kolene® Steels
KT	038705KUP6	NA	UNIT PACK - Reverse Clutch	.083	69-98	1	6 Kolene® Steels

OEI® Original Equipment Improvements

ILL	ALTO No.	REF No.	Description	Spec	Year	Qty	Notes
KT	038985A	180-C	VB Kit® - Postal Vehicle		69-98	1	Transgo
KT	038986	4L30E	VB Kit®		91-04	1	Transgo

BANDS

ILL	ALTO No.	REF No.	Description	Spec	Year	Qty	Notes
15D	038950	96040183	1-2 (Low)	Tan	69-98	1	

FILTERS

ILL	ALTO No.	REF No.	Description	Spec	Year	Qty	Notes
16F	038940	96040620	Filter		69-98	1	

METAL CLAD SEALS

ILL	ALTO No.	REF No.	Description	Spec	Year	Qty	Notes
17F	032400	8670283	Front Pump		69-98	1	
18E	032402	1243402	Extension Housing (with Flange)		69-98	1	
18E	038405	96040762	Extension Housing - Sidekick 2wd		69-98	1	24785-61A50
18E	038402	96040460	Extension Housing - Sidekick/Tracker 4wd		69-98	1	24772-61A00
N I	032410C	96040528	Manual Lever		69-98	1	

SEALING RINGS

ILL	ALTO No.	REF No.	Description	Spec	Year	Qty	Notes
KT	038600	NA	Sealing Ring Kit - except Holden		69-98	1	
KT	038600A	NA	Sealing Ring Kit - Holden only		69-On	1	
20A	038100	96040549	Front Pump	Metal	69-98	2	TAW-273
21D	038101	96040605	Governor - Thin wall - all except Holden	Metal	69-98	3	
21D	038102	5258100	Governor - Thick wall - Holden only	Metal	69-98	3	
22F	038103	96040632	Low Servo piston	Metal	69-98	1	
N I	031105	8623653	Accumulator piston	Metal	69-98	1	

BUSHINGS

ILL	ALTO No.	REF No.	Description	Spec	Year	Qty	Notes
KT	038625	NA	Bushing Kit		69-98	1	
24F	032200	NA	Front Pump		69-98	1	
25A	038201	8958621	Stator Support - Rear		69-98	1	
26A	043201	8628915	Stator Support - Front		69-98	1	
N I	038202	5258128	2nd Clutch drum		69-98	1	
28F	038203	5258075	Reaction Sun gear drum		69-98	1	
29E	038204	5258191	Case		69-98	1	

GENERAL MOTORS

3L30 TH180, TH180C

1969-98

BUSHINGS

ILL	ALTO No.	REF No.	Description	Spec	Year	Qty	Notes
30E	032208	6260048	Extension Housing - bronze		69-98	1	
30E	032208A	3717682	Extension Housing - babbit		69-98	1	

MODULATORS

ILL	ALTO No.	REF No.	Description	Spec	Year	Qty	Notes
31F	038500	9934495	Modulator	Blue	69-81	1	Non-Adjustable
31F	TBA	96013028	Modulator	Dual Blue	69-79	1	Adjustable
31F	038500B	96013169	Modulator	Green	80-On	1	Adjustable

GENERAL MOTORS

4L30E 1990-On

OPEL AR25 (2.5L), AR35 (3.0L) & BMW THM1

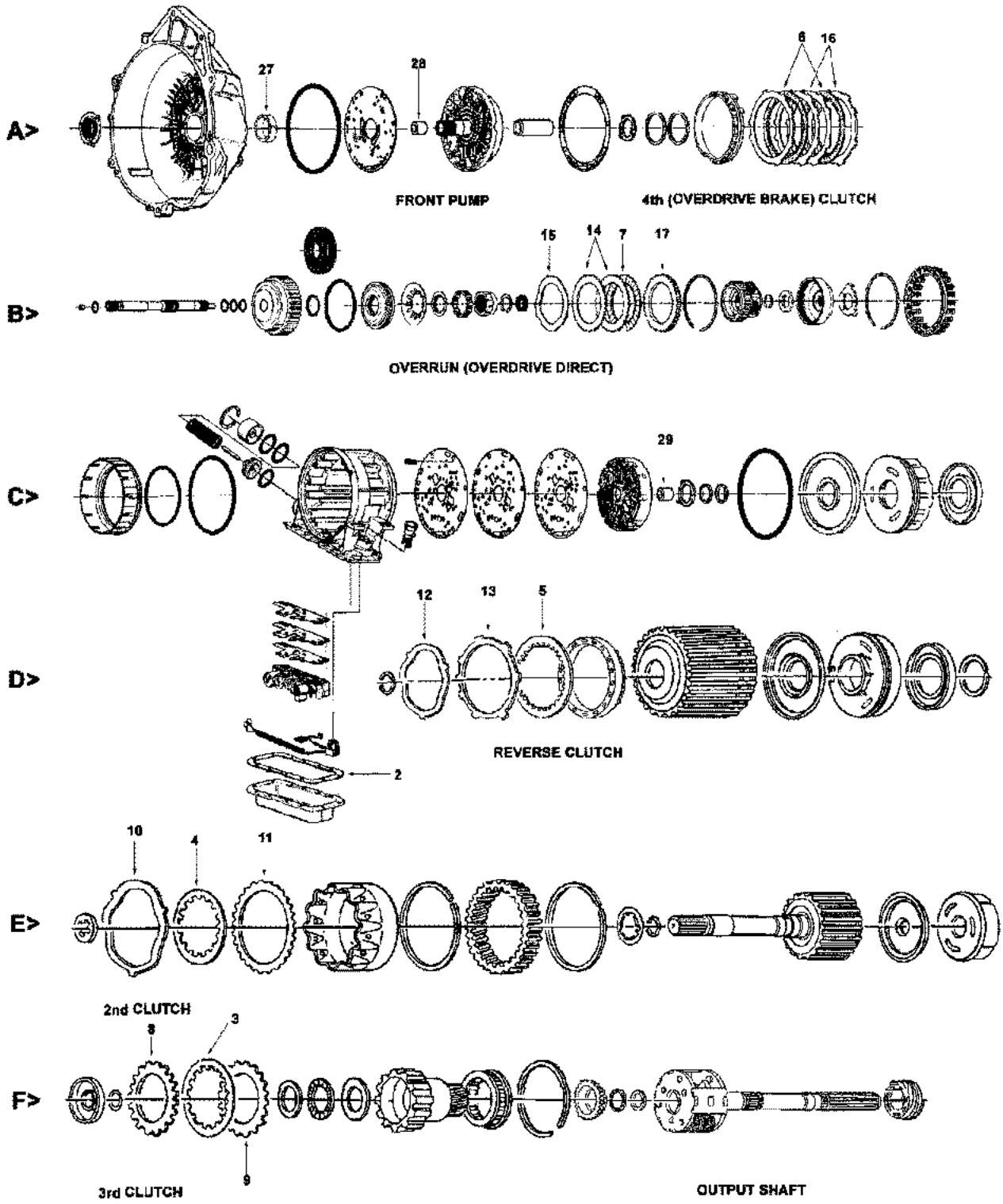

GENERAL MOTORS

4L30E 1990-On

OPEL AR25 (2.5L), AR35 (3.0L) & BMW THM1

G>

H>

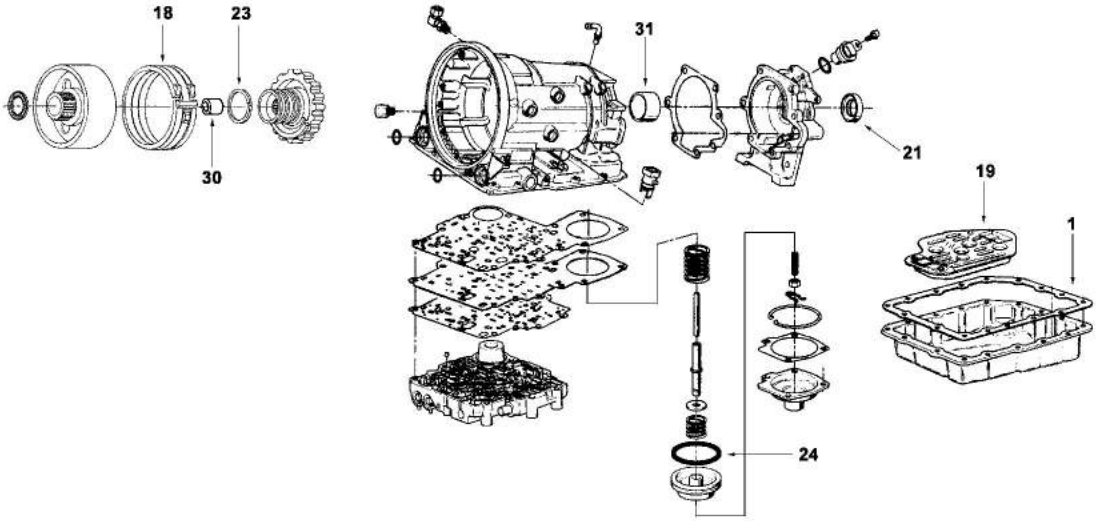

KITS							*Add Suffix SK for Super Kit
ILL	Description	Years	Friction Module	Steel Module	Overhaul Kit	Banner Kit	Master Kit
KT	Rebuilding Kit (combo)	90-97	038752B	038753D	038802	038907LS	038907
KT	Rebuilding Kit (combo)	98-On	038752D	038753D	038802	038907ALS	038907A

MISCELLANEOUS GASKETS & KIT COMPONENTS

ILL	ALTO No.	REF No.	Description	Spec	Year	Qty	Notes
1H	038818	96014234	Gasket, Oil pan - (GM, Isuzu, Opel, Honda)	Cork/Rub	90-On	1	
1H	038818A	24111-421367	Gasket, Oil pan - (BMW)	Cork/Rub	90-On	1	
2D	038819F	96014235	Gasket, Adapter case	Farpak	90-On	1	

FRICTION CLUTCHES

ILL	ALTO No.	REF No.	Description	Spec	Year	Qty	Notes
3F	038700	96040597	3rd Clutch	.098	90-97	4	HEG - 12T - OD: 3.872" - SM
3F	038700-160	96017371	3rd Clutch	.063	98-On	5-6	HEG - 12T - OD: 3.872" - PL
4E	038702	96040584	2nd Clutch	.098	90-On	5-6	HEG - 30T - OD: 5.224" - SM
5D	038704	96040575	Reverse Clutch	.098	90-On	5	HEG - 36T - OD: 6.405" - SM
6A	038720	96014195	Overrun (OD Direct)	.088	90-On	2	HEG - 40T - OD: 5.095" - PL
7B	038722	96014459	4th Clutch (Overdrive Brake)	.088	90-On	3	HEG - 36T - OD: 6.712" - SM
N I	138730	NA	Transfer Case (4x4) (1 sided) - internal spline	.065	96-On	6	Tan - 19T - OD: 5.590" - PLI
N I	138731	NA	Transfer Case (4x4) (1 sided) - external spline	.065	96-On	7	Tan - 31T - ID: 4.727" - PLI

GENERAL MOTORS

4L30E 1990-On

OPEL AR25 (2.5L), AR35 (3.0L) & BMW THM1

FRICTION CLUTCHES - HI-PERFORMANCE - Red Eagle®

ILL	ALTO No.	REF No.	Description	Spec	Year	Qty	Notes
3F	038740	NA	3rd Clutch	.098	90-97	4	Red - 12T - OD: 3.872" - SM
4E	038742	NA	2nd Clutch	.098	90-On	5-6	Red - 30T - OD: 5.224" - SM
5D	038744	NA	Reverse Clutch	.098	90-On	5	Red - 36T - OD: 6.405" - SM

FRICTION CLUTCHES - HI-PERFORMANCE - UNIT PACKS (ONE Rebuild)

ILL	ALTO No.	REF No.	Description	Spec	Year	Qty	Notes
KT	038740UP6	NA	UNIT PACK - 3rd Clutch	.098	90-97	1	6 Red Eagle® Frictions
KT	038742UP6	NA	UNIT PACK - 2nd Clutch	.098	90-On	1	6 Red Eagle® Frictions
KT	038744UP6	NA	UNIT PACK - Reverse Clutch	.098	90-On	1	6 Red Eagle® Frictions

STEEL CLUTCHES

ILL	ALTO No.	REF No.	Description	Spec	Year	Qty	Notes
9F	038701	96014955	3rd Clutch	.083	90-On	5-6	30T - ID: 2.848"
9F	038711	5258086	3rd Clutch - Selective	.070	90-On	AR	30T - ID: 2.848"
N I	038701-050	NA	3rd Clutch - Shim	.020	90-On	AR	30T - ID: 2.848"
N I	038701-080	NA	3rd Clutch - Shim	.030	90-On	AR	30T - ID: 2.848"
8F	TBA	96041270	3rd Clutch - wave		90-On	1	3T - ID: 2.848"
11E	038703	96014956	2nd Clutch	.080	90-On	6-7	36T - ID: 4.303"
11E	038713	5258057	2nd Clutch - Selective	.070	90-On	AR	36T - ID: 4.303"
N I	038703-050	NA	2nd Clutch - Shim	.020	90-On	AR	36T - ID: 4.303"
N I	038703-080	NA	2nd Clutch - Shim	.030	90-On	AR	36T - ID: 4.303"
10E	TBA	96040582	2nd Clutch - wave		90-On	1	3T - ID: 4.303"
13D	038705	96040574	Reverse Clutch	.083	90-On	5-6	7T - ID:5.679"
13D	038715	5258019	Reverse Clutch	.070	90-On	AR	7T - ID: 5.679"
14B	038721	96014194	Overrun (OD Direct)	.083	90-On	2	36T - ID: 3.959"
15B	TBA	96014983	Overrun (OD Direct) - wave		90-On	1	3T - ID: 3.959"
16A	038723	96014187	4th Clutch (OD Brake)	.083	90-On	4	7T - ID: 5.840"

STEEL CLUTCHES - HI-PERFORMANCE - Kolene®

ILL	ALTO No.	REF No.	Description	Spec	Year	Qty	Notes
9F	038701K	NA	3rd Clutch	.083	90-On	3-6	Kol - 30T - ID: 2.848"
11E	038703K	NA	2nd Clutch	.080	90-On	3-6	Kol - 36T - ID: 4.303"
13D	038705K	NA	Reverse Clutch	.083	90-On	3-6	Kol - 7T - ID: 5.679"

STEEL CLUTCHES - HI-PERFORMANCE - UNIT PACKS (ONE Rebuild)

ILL	ALTO No.	REF No.	Description	Spec	Year	Qty	Notes
KT	038701KUP6	NA	UNIT PACK - 3rd Clutch	.083	90-On	1	6 Kolene® Steels
KT	038703KUP6	NA	UNIT PACK - 2nd Clutch	.080	90-On	1	6 Kolene® Steels
KT	038705KUP6	NA	UNIT PACK - Reverse Clutch	.083	90-On	1	6 Kolene® Steels

PRESSURE PLATES

ILL	ALTO No.	REF No.	Description	Spec	Year	Qty	Notes
17B	TBA	8634864	Overrun (OD Direct) Backing		90-On	1	

BANDS

ILL	ALTO No.	REF No.	Description	Spec	Year	Qty	Notes
18G	038950	96014805	1-2 (Low)	Tan	90-On	1	

GENERAL MOTORS

4L30E 1990-On

OPEL AR25 (2.5L), AR35 (3.0L) & BMW THM1

FILTERS

ILL	ALTO No.	REF No.	Description	Spec	Year	Qty	Notes
19G	038942	96015062	Filter - Honda/Isuzu		90-On	1	
19G	038944A	24111-218899	Filter - BMW		90-On	1	Smaller pickup inlet

METAL CLAD SEALS

ILL	ALTO No.	REF No.	Description	Spec	Year	Qty	Notes
20	038401	96015187	Front Pump		90-On	1	
21G	038403	96014416	Ext. Hsg. - all except below	Poly	90-On	1	use 038404
21G	053405A	24111-207426	Ext. Hsg. - BMW	Poly	90-On	1	

SEALING RINGS

ILL	ALTO No.	REF No.	Description	Spec	Year	Qty	Notes
KT	038602	C376	Sealing Ring Kit - 4M/3T		90-On	1	
22	038100	96040549	Front Pump	Metal	90-On	2	
23G	038101	96040605	Output shaft to case	Metal	90-On	1	
24H	038103	96040632	Low Servo piston	Metal	90-On	1	
25	038112	96017484	Turbine Shaft - cut	Teflon	90-On	2	
26	038113	96013953	Turbine Shaft - solid	Teflon	90-On	1	

BUSHINGS

ILL	ALTO No.	REF No.	Description	Spec	Year	Qty	Notes
KT	038625A	NA	Bushing Kit		90-On	1	
27	032200	NA	Front Pump		90-On	1	
28	043201	8628915	Stator Support - Front		90-On	1	
29	TBA	NA	Center Support		90-On	1	
N I	038202	5258128	2nd Clutch drum		90-On	1	
30G	038203	5258075	Reaction Sun gear drum		90-On	1	
31G	038204	5258191	Case		90-On	1	
N I	048209	8631905	Overdrive (Front) Planet		90-On	1	
N I	043210	8634908	Overrun Clutch housing		90-On	1	
N I	043215	8634925	Input Shaft (3rd clutch drum)		90-On	1	

WASHERS

ILL	ALTO No.	REF No.	Description	Spec	Year	Qty	Notes
N I	038635A	NA	Washer Kit - BMW selective (7)		90-On	1	

ELECTRONIC CONTROL COMPONENTS

ILL	ALTO No.	REF No.	Description	Spec	Year	Qty	Notes
N I	038505	96014593	Solenoid 1-2, 3-4 Shift		90-On	1	
N I	038507	96014224	Solenoid 2-3 Shift		90-On	1	
N I	038509	96040316	Solenoid TCC Bolt-in (BW)		90-99	1	

MOLDED PISTONS

ILL	ALTO No.	REF No.	Description	Spec	Year	Qty	Notes
N I	038302	NA	Overrun retrofits for stamped steel piston		90-99	1	

GENERAL MOTORS

TH200, TH200C

1976-87

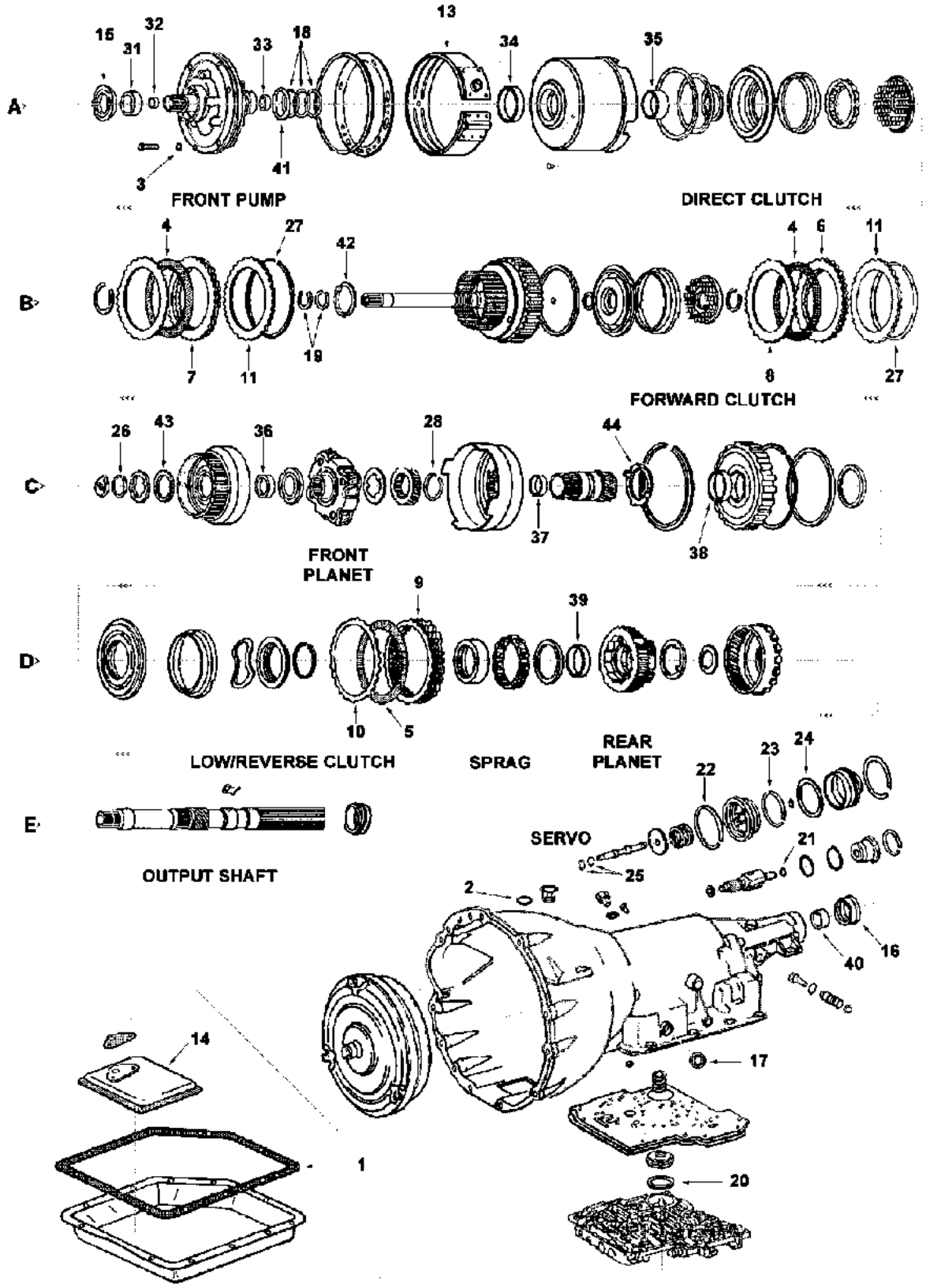

GENERAL MOTORS

TH200, TH200C

1976-87

KITS

*Add Suffix SK for Super Kit

ILL	Description	Years	Friction Module	Steel Module	Overhaul Kit	Banner Kit	Master Kit
KT	Rebuilding Kit	76-87	043752	043753	043800	043901LS	043901

KITS - HI-PERFORMANCE Red Eagle®

ILL	Description	Years	Friction Module	Steel Module	Overhaul Kit	Banner Kit	Master Kit
KT	Rebuilding Kit	76-87	043752HP	043753HP	043800	043901HPLS	043901HP

MISCELLANEOUS GASKETS & KIT COMPONENTS

ILL	ALTO No.	REF No.	Description	Spec	Year	Qty	Notes
1E	043816	8633380	Gasket, Oil Pan	Cork/Rub	76-87	1	
2E	010113B	6264902	O Ring, Filler Tube		76-87	1	
3A	032003	8626281	Washer, Front pump		76-87	6	

FRICTION CLUTCHES

ILL	ALTO No.	REF No.	Description	Spec	Year	Qty	Notes
4B	043700	8657168	Forward	.078	76-87	3-6	Tan - 30T - OD: 5.226" - SM
4B	043700	8657168	Direct	.078	76-87	3-5	Tan - 30T - OD: 5.226" - SM
5D	043702	8669069	Low/Reverse	.078	76-87	4-6	HEG - 44T - OD: 5.529" - PL

FRICTION CLUTCHES - HI-PERFORMANCE - Red Eagle®

ILL	ALTO No.	REF No.	Description	Spec	Year	Qty	Notes
4B	043740	NA	Forward & Direct	.078	76-87	3-6	Red - 30T - OD: 5.226" - SM
4B	043740PL	NA	Forward & Direct	.078	76-87	3-6	Red - 30T - OD: 5.226" - PL
4B	043740A	NA	Forward & Direct (thin)	.061	76-87	AR	Red - 30T - OD: 5.226" - SM
5D	043742	NA	Low/Reverse	.078	76-87	4-6	Red - 44T - OD: 5.529" - SM

FRICTION CLUTCHES - HI-PERFORMANCE - UNIT PACKS (ONE Rebuild)

ILL	ALTO No.	REF No.	Description	Spec	Year	Qty	Notes
KT	043740UP6	NA	UNIT PACK - Forward or Direct	.078	76-87	1	6 Red Eagle® Frictions
KT	043740AUP8	NA	UNIT PACK - Forward or Direct (thin)	.061	76-87	1	8 Red Eagle® Frictions
KT	043742UP6	NA	UNIT PACK - Low/Reverse	.078	76-87	1	6 Red Eagle® Frictions

STEEL CLUTCHES

ILL	ALTO No.	REF No.	Description	Spec	Year	Qty	Notes
6B	043701	8678902	Forward	.078	76-87	2-3	30T - ID: 4.340"
6B	043701A	NA	Forward (thin)	.060	76-87	AR	30T - ID: 4.340"
8B	043707	8678901	Forward - wave	.063	76-87	1	30T - ID: 4.340"
7B	043703	8678923	Direct	.090	76-87	3-5	26T - ID: 4.340"
7B	043717	8628484OS	Direct - oversized	.101	76-87	AR	30T - ID: 4.340"
9D	043705	8678922	Low/Reverse	.077	76-87	5-7	22T - ID: 4.690"
9D	043705-230	8628224OS	Low/Reverse	.091	76-87	AR	22T - ID: 4.690"
10D	043719	8678926	Low/Reverse - wave	.078	76-87	1	4T - ID: 4.690"

STEEL CLUTCHES - HI-PERFORMANCE - Kolene®

ILL	ALTO No.	REF No.	Description	Spec	Year	Qty	Notes
6B	043701K	NA	Forward	.078	76-87	2-3	Kol - 30T - ID: 4.340"
6B	043701AK	NA	Forward (thin)	.060	76-87	AR	Kol - 30T - ID: 4.340"
7B	043703K	NA	Direct	.090	76-87	3-5	Kol - 26T - ID: 4.340"
7B	043717K	NA	Direct - oversized	.101	76-87	AR	Kol - 30T - ID: 4.340"
9D	043705K	NA	Low/Reverse	.077	76-87	5-7	Kol - 22T - ID: 4.690"

GENERAL MOTORS

TH200, TH200C

1976-87

STEEL CLUTCHES - HI-PERFORMANCE - UNIT PACKS (ONE Rebuild)

ILL	ALTO No.	REF No.	Description	Spec	Year	Qty	Notes
KT	043701KUP3	NA	UNIT PACK - Forward	.078	76-87	1	3 Kolene® Steels
KT	043701AKUP8	NA	UNIT PACK - Forward (thin)	.060	76-87	1	8 Kolene® Steels
KT	043703KUP6	NA	UNIT PACK - Direct	.090	76-87	1	6 Kolene® Steels
KT	043705KUP7	NA	UNIT PACK - Low/Reverse	.077	76-87	1	7 Kolene® Steels

PRESSURE PLATES

ILL	ALTO No.	REF No.	Description	Spec	Year	Qty	Notes
11B	TBA	8628088	Forward & Direct	.250	76-87	2	

OEI® Original Equipment Improvements

ILL	ALTO No.	REF No.	Description	Spec	Year	Qty	Notes
KT	043757	NA	PowerPack® - Direct Clutch		76-87	1	
KT	043985	SK® 200	VB Shift Kit® - TH200	Transgo®	76-79	1	
KT	043986	SK® 279	VB Shift Kit® - TH200C	Transgo®	79-87	1	
12A	057501	8654491	Retainer, Front pump seal		76-87	1	Prevents front seal pop-out

BANDS

ILL	ALTO No.	REF No.	Description	Spec	Year	Qty	Notes
13A	043950	8657210	Intermediate (Flex)	Tan	76-87	1	

BANDS - HI-PERFORMANCE - Red Eagle® or Carbonite®

ILL	ALTO No.	REF No.	Description	Spec	Year	Qty	Notes
13A	043961	NA	Intermediate (Flex) Heavy Duty PowerBand®	Red	76-87	1	Red Eagle®
13A	043961C	NA	Intermediate (Flex) Super Duty PowerBand®	Crb	76-87	1	Carbonite®
			Note: 043961 & 043961C have Enhanced Heat Treated Anchors. The Case anchor is thicker and the Servo anchor is reinforced.				

FILTERS

ILL	ALTO No.	REF No.	Description	Spec	Year	Qty	Notes
14E	043940	8628935	Filter, Brass screen		76-E79	1	
14E	043942	8632949	Filter, Nylon screen		79-87	1	

METAL CLAD SEALS

ILL	ALTO No.	REF No.	Description	Spec	Year	Qty	Notes
15A	043400	24202535	Front Pump	Vamac®	76-87	1	
16E	032402	3932255	Extension Housing with Flange		76-87	1	
17E	032410C	8657163	Manual Lever		76-87	1	

SEALING RINGS

ILL	ALTO No.	REF No.	Description	Spec	Year	Qty	Notes
KT	043600	NA	Sealing Ring Kit - 19T		76-87	1	
KT	043601	NA	Sealing Ring Kit - Metal & Teflon		76-87	1	
18A	043100	8628055	Front Pump stator	Teflon	76-87	3	
19B	043101	8633874	Turbine Shaft	Metal	76-87	2	
19B	TBA	8628090	Turbine Shaft	Teflon	76-87	2	
20E	043103	8628275	1-2 Accumulator	Metal	76-87	1	
20E	TBA	8634161	1-2 Accumulator	Teflon	76-87	1	
21E	TBA	8633455	Governor	Teflon	76-87	1	
22E	043108	8628123	Intermediate Servo - Outer	Metal	76-83	1	
22E	TBA	8628123	Intermediate Servo - Outer	Teflon	76-83	1	

GENERAL MOTORS

TH200, TH200C

1976-87

SEALING RINGS

ILL	ALTO No.	REF No.	Description	Spec	Year	Qty	Notes
23E	043114	8630568	Intermediate Servo - Center	Metal	79-83	1	1.96"
23E	TBA	8630568	Intermediate Servo - Center	Teflon	79-83	1	
23E	043113	8632149	Intermediate Servo - Center	Metal	79-87	1	2.14"
23E	TBA	8632149	Intermediate Servo - Center	Teflon	79-87	1	
23E	043111	8632150	Intermediate Servo - Center	Metal	79-87	1	2.28"
23E	TBA	8632150	Intermediate Servo - Center	Teflon	79-87	1	
24E	043104	8628697	Intermediate Servo - Inner	Metal	76-83	1	2.36"
24E	TBA	8628697	Intermediate Servo - Inner	Teflon	76-83	1	
24E	043110	8632151	Intermediate Servo - Inner	Metal	79-87	1	2.40"
24E	TBA	8632151	Intermediate Servo - Inner	Teflon	79-87	1	
24E	043107	8630080	Intermediate Servo - Inner	Metal	76-83	1	2.54"
24E	TBA	8630080	Intermediate Servo - Inner	Teflon	76-83	1	
24E	043105	8628124	Intermediate Servo - Inner	Metal	76-83	1	2.67"
24E	TBA	8628124	Intermediate Servo - Inner	Teflon	76-83	1	
24E	043109	8631473	Intermediate Servo - Inner	Metal	79-83	1	2.79"
24E	TBA	8631473	Intermediate Servo - Inner	Teflon	79-83	1	
24E	043106	8628125	Intermediate Servo - Inner	Metal	76-78	1	2.89"
24E	TBA	8628125	Intermediate Servo - Inner	Teflon	76-78	1	
25E	043115	8630120	Intermediate Servo pin	Teflon	79-87	2	

SNAP RINGS

ILL	ALTO No.	REF No.	Description	Spec	Year	Qty	Notes
KT	043680	NA	Snap Ring Kit		76-87	1	

BUSHINGS

ILL	ALTO No.	REF No.	Description	Spec	Year	Qty	Notes
KT	043625	NA	Bushing Kit		76-87	1	
31A	043200	8628913	Front Pump - Body	Babbit	76-87	1	
32A	043201	8628915	Front Pump stator - Front		76-87	1	
33A	043202	8628916	Front Pump stator - Rear		76-87	1	
34A	043203	8628918	Direct clutch drum - Front		76-87	1	
35A	043204	8628917	Direct clutch drum - Rear		76-87	1	
36C	043205	8628925	Front Internal gear (long)		76-87	1	
36C	043209	8628990	Front Internal gear (short)		76-87	1	
37C	043206	8628928	Rear Sun Gear		76-87	1	
38C	043207	8628929	Low/Reverse Clutch housing		76-87	1	
39D	043208	8628947	Rear Carrier		76-87	1	
40E	032208	6260048	Extension Housing		76-87	1	

WASHERS

ILL	ALTO No.	REF No.	Description	Spec	Year	Qty	Notes
KT	043635	NA	Washer Kit - no selectives		76-87	1	
41A	043174	8628056	Front pump to Direct drum		76-87	1	
42B	043175	8628091	Direct drum to Forward drum		76-87	1	
43C	043176	8628765	Front Internal gear to support		76-87	1	
44C	043177	8628549	Input Housing to Low/Reverse Housing		76-79	1	Metal
44C	043177X	8628766	Input Housing to Low/Reverse Housing	.060	79-87	1	Plastic
44C	043177B	NA	Input Housing to Low/Reverse Housing	.080	76-87	1	Plastic

GENERAL MOTORS

TH200-4R

1981-90

A>

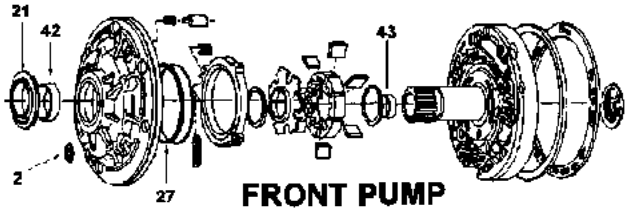

B>

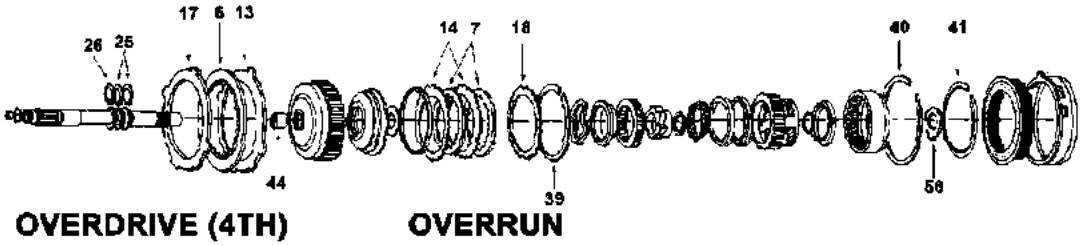

C>

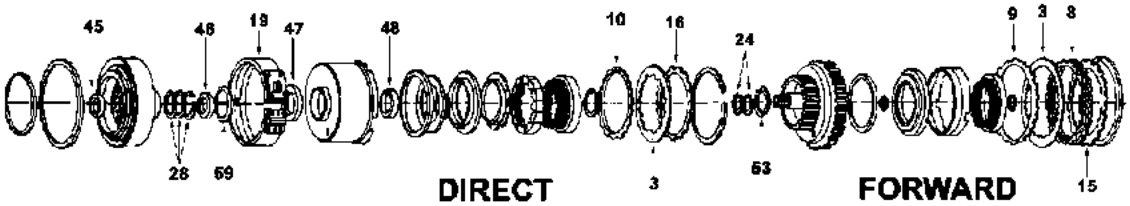

D>

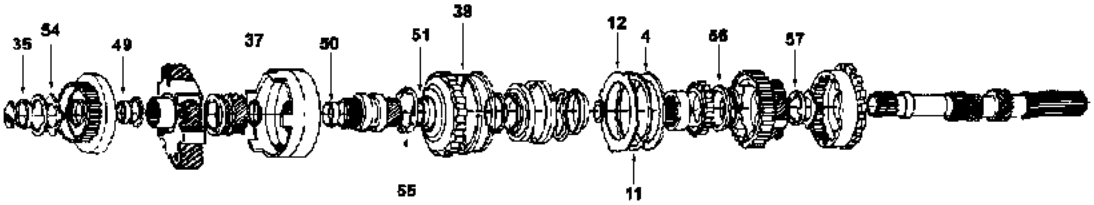

E>

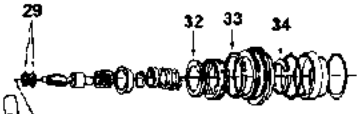

F>

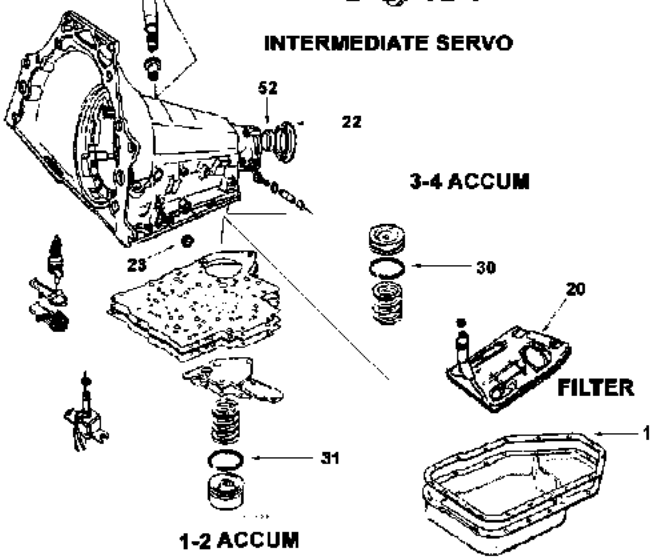

G>

GENERAL MOTORS

TH200-4R

1981-90

KITS

*Add Suffix SK for Super Kit

ILL	Description	Years	Friction Module	Steel Module	Overhaul Kit	Banner Kit	Master Kit
KT	Rebuilding Kit	81-90	043752A	043753A	043804	043907LS	043907

KITS - HI-PERFORMANCE Red Eagle®

ILL	Description	Years	Friction Module	Steel Module	Overhaul Kit	Banner Kit	Master Kit
KT	Rebuilding Kit	81-90	043752AHP	043753AHP	043804	043907HPLS	043907HP

MISCELLANEOUS GASKETS & KIT COMPONENTS

ILL	ALTO No.	REF No.	Description	Spec	Year	Qty	Notes
1G	043820	8634198	Gasket, Oil Pan	Cork/Rub	81-90	1	
KT	TBA	NA	Kit, Servo Lipseals		81-90	1	
N I	010115B	6264903	O Ring, Electrical connector		81-90	1	
2A	032003	8626281	Washer, Front pump bolts		81-90	6	

FRICTION CLUTCHES

ILL	ALTO No.	REF No.	Description	Spec	Year	Qty	Notes
3C	043700	8657168	Forward	.078	81-90	3-6	Tan - 30T - OD: 5.226" - SM
3C	043700	8657168	Direct	.078	81-90	3-5	Tan - 30T - OD: 5.226" - SM
4D	043702	8669069	Low/Reverse	.078	81-90	4-6	Tan - 44T - OD: 5.529" - PL
4D	043722	NA	Low/Reverse	.078	81-90	4-6	HEG - 44T - OD: 5.529" - PL
6B	043708	8657170	Overdrive (4th) Clutch	.080	81-90	2	Tan - 36T - OD: 6.886" - SM
7B	043710	8657031	Overrun	.080	81-90	2	Tan - 40T - OD: 5.095" - SB

FRICTION CLUTCHES - HI-PERFORMANCE - Red Eagle®

ILL	ALTO No.	REF No.	Description	Spec	Year	Qty	Notes
3C	043740	NA	Forward & Direct	.078	81-90	3-6	Red - 30T - OD: 5.226" - SM
3C	043740PL	NA	Forward & Direct	.078	81-90	3-6	Red - 30T - OD: 5.226" - PL
3C	043740A	NA	Forward & Direct (thin)	.061	81-90	AR	Red - 30T - OD: 5.226" - SM
4D	043742	NA	Low/Reverse	.078	81-90	4-6	Red - 44T - OD: 5.529" - SM
6B	043746	NA	Overdrive (4th) Clutch	.080	81-90	2	Red - 36T - OD: 6.886" - SM
7B	043748	NA	Overrun	.080	81-90	2	Red - 40T - OD: 5.095" - SB

FRICTION CLUTCHES - HI-PERFORMANCE - UNIT PACKS (ONE Rebuild)

ILL	ALTO No.	REF No.	Description	Spec	Year	Qty	Notes
KT	043740UP6	NA	UNIT PACK - Forward & Direct	.078	81-90	1	6 Red Eagle® Frictions
KT	043740AUP8	NA	UNIT PACK - Forward or Direct (thin)	.061	81-90	1	8 Red Eagle® Frictions
KT	043742UP6	NA	UNIT PACK - Low/Reverse	.078	81-90	1	6 Red Eagle® Frictions
KT	043746UP2	NA	UNIT PACK - Overdrive (4th) Clutch	.080	81-90	1	2 Red Eagle® Friction
KT	043748UP2	NA	UNIT PACK - Overrun	.080	81-90	1	2 Red Eagle® Friction

STEEL CLUTCHES

ILL	ALTO No.	REF No.	Description	Spec	Year	Qty	Notes
8C	043701	8678902	Forward	.078	81-90	2-3	30T - ID: 4.340"
8C	043701A	NA	Forward - thin	.060	81-90	AR	30T - ID: 4.340"
9C	043707	8678901	Forward - wave	.063	81-90	1	30T - ID: 4.340"
10C	043703	8678923	Direct	.090	81-90	3-6	26T - ID: 4.340"
10C	043717	NA	Forward & Direct - oversize	.101	81-90	AR	30T - ID: 4.340"
11D	043705	8678922	Low/Reverse	.077	81-90	5-7	22T - ID: 4.690"
11D	043705-230	NA	Low/Reverse - oversize	.092	81-90	AR	22T - ID: 4.690"
12D	043719	8678926	Low/Reverse - wave	.078	81-90	1	4T - ID: 4.690"
13B	043713	8678928	Overdrive (4th) Clutch	.080	81-90	3	6T - ID: 5.844"

GENERAL MOTORS

TH200-4R

1981-90

STEEL CLUTCHES

14B	043715	8678930	Overrun	.080	81-90	2	36T - ID: 3.959"

STEEL CLUTCHES - HI-PERFORMANCE - Kolene®

ILL	ALTO No.	REF No.	Description	Spec	Year	Qty	Notes
8C	043701K	NA	Forward	.078	81-90	2-3	Kol - 30T - ID: 4.340"
8C	043701AK	NA	Forward (thin)	.060	81-90	AR	Kol - 30T - ID: 4.340"
10C	043703K	NA	Direct	.090	81-90	3-6	Kol - 26T - ID: 4.340"
10C	043717K	NA	Forward & Direct - oversize	.101	81-90	AR	Kol - 30T - ID: 4.340"
11D	043705K	NA	Low/Reverse	.077	81-90	5-7	Kol - 22T - ID: 4.690"
13B	043713K	NA	Overdrive (4th) Clutch	.080	81-90	3	Kol - 6T - ID: 5.844"
14B	043715K	NA	Overrun	.080	81-90	2	Kol - 36T - ID: 3.959"

STEEL CLUTCHES - HI-PERFORMANCE - UNIT PACKS (ONE Rebuild)

ILL	ALTO No.	REF No.	Description	Spec	Year	Qty	Notes
KT	043701KUP3	NA	UNIT PACK - Forward	.078	81-90	1	3 Kolene® Steels
KT	043701AKUP8	NA	UNIT PACK - Forward (thin)	.060	81-90	1	8 Kolene® Steels
KT	043703KUP6	NA	UNIT PACK - Direct	.090	81-90	1	6 Kolene® Steels
KT	043705KUP7	NA	UNIT PACK - Low/Reverse	.077	81-90	1	7 Kolene® Steels
KT	043713KUP3	NA	UNIT PACK - Overdrive (4th) Clutch	.080	81-90	1	3 Kolene® Steels
KT	043715KUP2	NA	UNIT PACK - Overrun	.080	81-90	1	2 Kolene® Steels

PRESSURE PLATES

ILL	ALTO No.	REF No.	Description	Spec	Year	Qty	Notes
15C	TBA	8628088	Forward - backing		81-90	1	
16C	043760A	8678925	Direct - backing	.177	81-90	1	
17B	043762A500	8634866	Overdrive (4th) Clutch - backing	.197	81-90	1	
18B	TBA	8634864	Overrun		81-90	1	

OEI® Original Equipment Improvements

ILL	ALTO No.	REF No.	Description	Spec	Year	Qty	Notes
KT	043757	NA	PowerPack® - Direct Clutch		81-90	1	
N I	057501	8654491	Retainer, Front pump seal		81-90	1	prevents front seal pop-out
KT	043990	SK® 200-4R	Shift Kit® - Corrects 3-2 cutloose, shift timing	Transgo®	81-90	1	
KT	043991	200-4R-HD2	Reprogramming Kit™ - converts to manual shift	Transgo®	81-90	1	

BANDS

ILL	ALTO No.	REF No.	Description	Spec	Year	Qty	Notes
19C	043950	8657210	Intermediate (Flex)	Tan	81-90	1	

BANDS - HI-PERFORMANCE - Red Eagle® or Carbonite®

ILL	ALTO No.	REF No.	Description	Spec	Year	Qty	Notes
19C	043961	NA	Intermediate (Flex) Heavy Duty PowerBand®	RED	81-90	1	Red Eagle®
19C	043961C	NA	Intermediate (Flex) Super Duty PowerBand®	Crb	81-90	1	Carbonite®
			Note: 043961 & 043961C have Enhanced Heat Treated Anchors. The Case anchor is thicker and the Servo anchor is reinforced.				

GENERAL MOTORS

TH200-4R

1981-90

FILTERS

ILL	ALTO No.	REF No.	Description	Spec	Year	Qty	Notes
20G	043946	8657789	Filter - with multi-lip seal included		81-90	1	

METAL CLAD SEALS

ILL	ALTO No.	REF No.	Description	Spec	Year	Qty	Notes
21A	043400	24202535	Front pump	Vamac®	81-90	1	
22F	032402	1243402	Extension Housing - with flange		81-90	1	
23F	032410C	8657163	Manual Lever		81-90	1	

SEALING RINGS

ILL	ALTO No.	REF No.	Description	Spec	Year	Qty	Notes
KT	043603	NA	Sealing Ring Kit - 3M/13T		81-90	1	
24C	043101	8628090	Forward Clutch drum	Teflon	81-90	2	
25B	043101	8628090	Turbine Shaft - Scarf cut	Teflon	81-90	2	
26B	TBA	8634598	Turbine Shaft - Solid	Teflon	81-90	1	
27A	043120	8634079	Pump Slide to pump	Metal	81-90	1	Not in Kit
28C	043116	8634156	Center Support	Metal	81-90	3	
29E	043115	8630120	Intermediate Servo pin	Teflon	81-90	2	
30F	043103	8634161	3-4 Accumulator	Teflon	81	1	Replaced by Lathe Cut
31G	043118	8634390	1-2 Accumulator	Teflon	81-90	1	
32E	043108	8628123	Intermediate Servo Outer - Release	Teflon	81-84	1	
33E	043104	8628697	Intermediate Servo Inner - Apply	Teflon	81-84	1	
34E	043114	8630568	Intermediate Servo Middle	Teflon	81-84	1	
N I	048107	8632588	Governor	Teflon	81-90	1	

SNAP RINGS

ILL	ALTO No.	REF No.	Description	Spec	Year	Qty	Notes
KT	043680	NA	Snap Ring Kit		81-90	1	

BUSHINGS

ILL	ALTO No.	REF No.	Description	Spec	Year	Qty	Notes
KT	043625A	NA	Bushing Kit		81-90	1	
42A	057200	8687987	Front Pump body		81-90	1	
N I	156206	8682860	Front Pump body	Teflon	81-90	1	
43A	043201	8628915	Front Pump stator support - front		81-90	1	
44B	043210	8634908	Overrun Clutch housing		81-90	1	
N I	048209	8631905	Overdrive planetary carrier		81-90	1	
45C	043211	8634907	Center Support - Front	29.8mm	81-90	1	
46C	043212	8634913	Center Support - Rear	33.8mm	81-90	1	
47C	043213	8634919	Direct Drum - Front	58mm	81-90	1	
48C	043214	8634918	Direct Drum - Rear	47.64mm	81-90	1	
49D	043209	8630990	Front Internal Gear		81-90	1	
50D	043206	8628928	Rear Sun Gear		81-90	1	
51D	043207	8628929	Low/Reverse Housing		81-90	1	
N I	043208	8628947	Rear planetary carrier		81-90	1	
52F	032208	6260048	Extension Housing		81-90	1	

GENERAL MOTORS

TH200-4R

1981-90

WASHERS

ILL	ALTO No.	REF No.	Description	Spec	Year	Qty	Notes
KT	043635A	NA	Washer Kit		81-90	1	
53C	043175	8628091	Direct drum to Forward drum		81-90	1	
54D	043176	8628765	Front Internal gear to support		81-90	1	
55D	043177	8626372	Input Housing to Low/Reverse Housing		81-90	1	Metal
55D	043177X	8628766	Input Housing to Low/Reverse Housing	.060	81-90	1	Plastic
55D	043177B	NA	Input Housing to Low/Reverse Housing	.080	81-90	1	Plastic
56D	043184	8628182	Rear Carrier to Low Race		81-87	1	
57D	043185	8628188	Rear Carrier to Internal gear		81-90	1	
58B	043187	8634146	Internal gear to Support		81-90	1	
59C	043188	8634157	Center Support to direct drum		81-90	1	

GENERAL MOTORS

TH325 1979-81
TH325-4L 1982-85

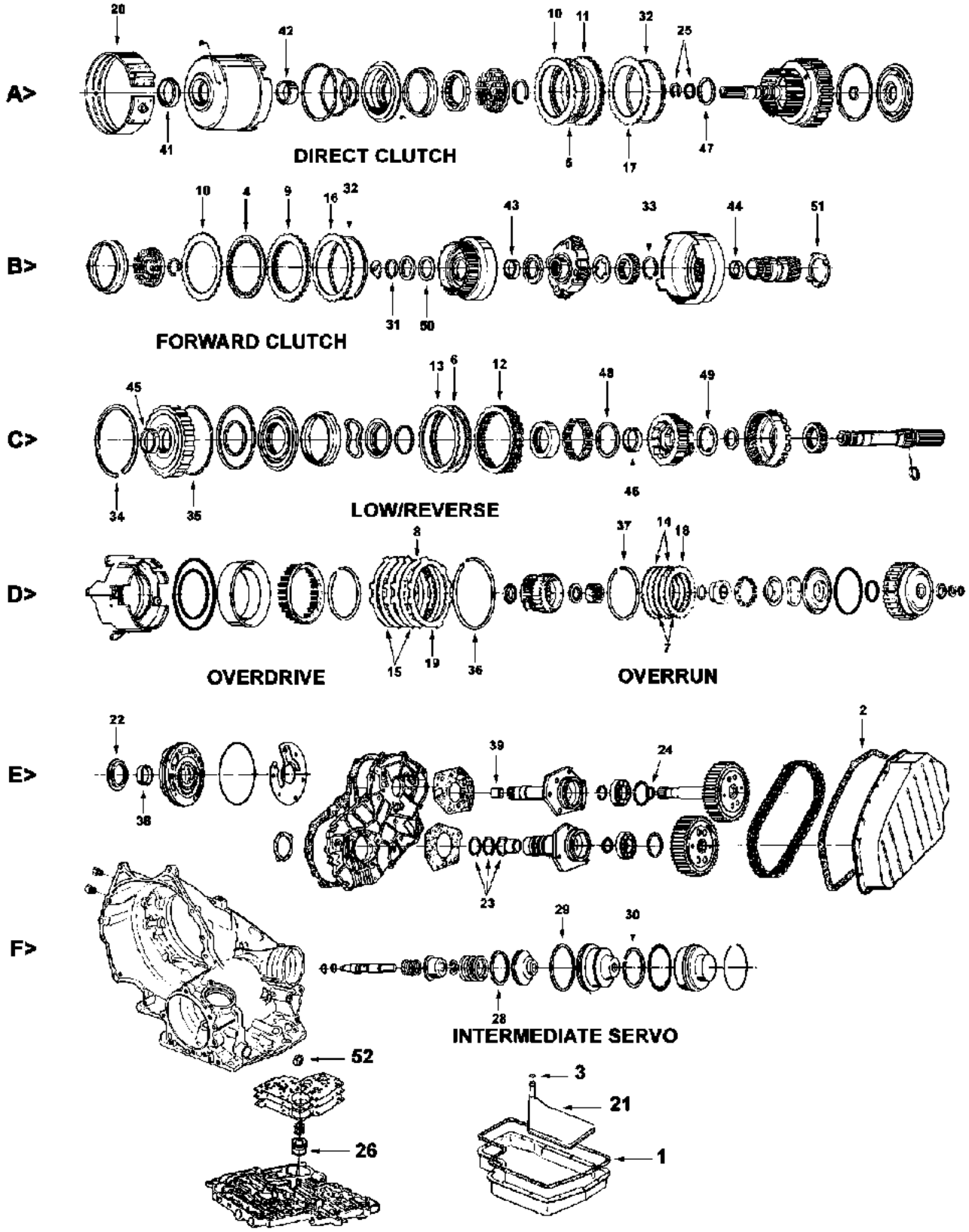

GENERAL MOTORS

TH325 1979-81

TH325-4L 1982-85

KITS

*Add Suffix SK for Super Kit

ILL	Description	Years	Friction Module	Steel Module	Overhaul Kit	Banner Kit	Master Kit
KT	Rebuilding Kit - TH325	79-81	043752B	043753B	043802	043905LS	043905
KT	Rebuilding Kit - TH325-4L	82-85	043752A	043753A	043806	043909LS	043909

MISCELLANEOUS GASKETS & KIT COMPONENTS

ILL	ALTO No.	REF No.	Description	Spec	Year	Qty	Notes
1F	043818	8635014	Gasket, Oil Pan	Cork/Rub	79-85	1	
2E	043826	8632032	Gasket, Sprocket cover - TH325	Cork/Rub	79-81	1	
2E	043826A	8635154	Gasket, Sprocket cover - TH325-4L	Cork/Rub	82-85	1	
KT	TBA	NA	Kit, Servo Lipseals		84-85	1	
3F	010116B	1363951	O Ring, Filter		79-85	1	

FRICTION CLUTCHES

ILL	ALTO No.	REF No.	Description	Spec	Year	Qty	Notes
4B	043700	8657168	Forward	.078	79-85	3-6	Tan - 30T - OD: 5.226" - SM
5A	043700	8657168	Direct	.078	79-85	3-5	Tan - 30T - OD: 5.226" - SM
6C	043702	8669069	Low/Reverse	.078	79-85	4-6	Tan - 44T - OD: 5.529" - PL
6C	043722	NA	Low/Reverse	.078	79-85	4-6	HEG - 44T - OD: 5.529" - PL
7D	043708	8657170	Overdrive (4th)	.080	82-85	2	Tan - 36T - OD: 6.886" - M
8D	043710	8657031	Overrun	.080	82-85	2	Tan - 40T - OD: 5.095" - SM

FRICTION CLUTCHES - HI-PERFORMANCE - Red Eagle®

ILL	ALTO No.	REF No.	Description	Spec	Year	Qty	Notes
4B	043740	NA	Forward & Direct	.078	79-85	3-6	Red - 30T - OD: 5.226" - SM
4B	043740PL	NA	Forward & Direct	.078	79-85	3-6	Red - 30T - OD: 5.226" - PL
4B	043740A	NA	Forward & Direct (thin)	.061	79-85	AR	Red - 30T - OD: 5.226" - SM
6C	043742	NA	Low/Reverse	.078	79-85	4-6	Red - 44T - OD: 5.529" - SM
7D	043746	NA	Overdrive (4th) Clutch	.080	82-85	2	Red - 36T - OD: 6.886" - SM
8D	043748	NA	Overrun	.080	82-85	2	Red - 40T - OD: 5.095" - SB

FRICTION CLUTCHES - HI-PERFORMANCE - UNIT PACKS (ONE Rebuild)

ILL	ALTO No.	REF No.	Description	Spec	Year	Qty	Notes
KT	043740UP6	NA	UNIT PACK - Forward or Direct	.078	79-85	1	6 Red Eagle® Frictions
KT	043740AUP8	NA	UNIT PACK - Forward or Direct (thin)	.061	79-85	1	8 Red Eagle® Frictions
KT	043742UP6	NA	UNIT PACK - Low/Reverse	.078	79-85	1	6 Red Eagle® Frictions
KT	043746UP2	NA	UNIT PACK - Overdrive (4th) Clutch	.080	82-85	1	2 Red Eagle® Friction
KT	043748UP2	NA	UNIT PACK - Overrun	.080	82-85	1	2 Red Eagle® Friction

STEEL CLUTCHES

ILL	ALTO No.	REF No.	Description	Spec	Year	Qty	Notes
9B	043701	8678902	Forward	.078	79-85	2-3	30T - ID: 4.340"
9B	043701A	NA	Forward - thin	.060	79-85	AR	30T - ID: 4.340"
10B	043707	8678901	Forward - wave	.063	79-85	1	30T - ID: 4.340"
11A	043703	8678923	Direct	.090	79-85	3-6	26T - ID: 4.340"
9B	043717	NA	Forward & Direct - oversize	.101	79-85	AR	30T - ID: 4.340"
12C	043705	8678922	Low/Reverse	.077	79-85	5-7	22T - ID: 4.690"

GENERAL MOTORS

TH325 1979-81

TH325-4L 1982-85

STEEL CLUTCHES

ILL	ALTO No.	REF No.	Description	Spec	Year	Qty	Notes
12C	043705-230	NA	Low/Reverse - oversize	.092	79-85	AR	22T - ID: 4.690"
13C	043719	8678926	Low/Reverse - wave	.078	79-85	1	4T - ID: 4.690"
14D	043713	8678928	Overdrive (4th) Clutch	.080	82-85	3	6T - ID: 5.844"
15D	043715	8678930	Overrun	.080	82-85	2	36T - ID: 3.959"

STEEL CLUTCHES - HI-PERFORMANCE - Kolene®

ILL	ALTO No.	REF No.	Description	Spec	Year	Qty	Notes
9B	043701K	NA	Forward	.078	79-85	2-3	Kol - 30T - ID: 4.340"
9B	043701AK	NA	Forward (thin)	.060	79-85	AR	Kol - 30T - ID: 4.340"
10A	043703K	NA	Direct	.090	79-85	3-6	Kol - 26T - ID: 4.340"
9B	043717K	NA	Forward & Direct - oversize	.101	79-85	AR	Kol - 30T - ID: 4.340"
12C	043705K	NA	Low/Reverse	.077	79-85	5-7	Kol - 22T - ID: 4.690"
14D	043713K	NA	Overdrive (4th) Clutch	.080	82-85	3	Kol - 6T - ID: 5.844"
15D	043715K	NA	Overrun	.080	82-85	2	Kol - 36T - ID: 3.959"

STEEL CLUTCHES - HI-PERFORMANCE - UNIT PACKS (ONE Rebuild)

ILL	ALTO No.	REF No.	Description	Spec	Year	Qty	Notes
KT	043701KUP3	NA	UNIT PACK - Forward	.078	79-85	1	3 Kolene® Steels
KT	043701AKUP8	NA	UNIT PACK - Forward (thin)	.060	79-85	1	8 Kolene® Steels
KT	043703KUP6	NA	UNIT PACK - Direct	.090	79-85	1	6 Kolene® Steels
KT	043705KUP7	NA	UNIT PACK - Low/Reverse	.077	79-85	1	7 Kolene® Steels
KT	043713KUP3	NA	UNIT PACK - Overdrive (4th) Clutch	.080	82-85	1	3 Kolene® Steels
KT	043715KUP2	NA	UNIT PACK - Overrun	.080	82-85	1	2 Kolene® Steels

PRESSURE PLATES

ILL	ALTO No.	REF No.	Description	Spec	Year	Qty	Notes
16B	TBA	8628088	Forward - backing		79-85	1	
17A	043760A	8678925	Direct - backing	.177	79-85	1	
18D	TBA	8634866	Overdrive (4th) Clutch - backing		82-85	1	
19D	TBA	8634864	Overrun		82-85	1	

OEI® Original Equipment Improvements

ILL	ALTO No.	REF No.	Description	Spec	Year	Qty	Notes
N I	057501	8654491	Retainer, Front pump seal		79-85	1	Prevents front seal pop-out
KT	043988	SK® 325	VB Shift Kit® - TH325	Transgo®	79-81	1	
KT	043989	SK® 325-4L	VB Shift Kit® - TH325-4L	Transgo®	82-85	1	

BANDS

ILL	ALTO No.	REF No.	Description	Spec	Year	Qty	Notes
20A	043950	8657210	Intermediate (Flex)	Tan	79-85	1	

BANDS - HI-PERFORMANCE - Red Eagle® or Carbonite®

ILL	ALTO No.	REF No.	Description	Spec	Year	Qty	Notes
20A	043961	NA	Intermediate (Flex) Heavy Duty PowerBand®	Red	79-85	1	Red Eagle®
20A	043961C	NA	Intermediate (Flex) Super Duty PowerBand®	Crb	79-85	1	Carbonite®
			Note: 043961 & 043961C have Enhanced Heat Treated Anchors. The Case anchor is thicker and the Servo anchor is reinforced.				

GENERAL MOTORS

TH325 1979-81

TH325-4L 1982-85

FILTERS

ILL	ALTO No.	REF No.	Description	Spec	Year	Qty	Notes
21F	043944	8632996	Filter - TH325		79-81	1	
21F	043948	8657789	Filter - TH325-4L		82-85	1	

METAL CLAD SEALS

ILL	ALTO No.	REF No.	Description	Spec	Year	Qty	Notes
22E	032400	8641300	Front Pump - TH325	Silicone	79-81	1	
22E	055400	24202535	Front Pump - TH325	Vamac®	79-81	1	
22E	043400	8641300	Front Pump - TH325-4L	Vamac®	82-85	1	
52F	032410C	8623056	Manual Lever		79-85	1	

SEALING RINGS

ILL	ALTO No.	REF No.	Description	Spec	Year	Qty	Notes
KT	043606	NA	Sealing Ring Kit - TH325	1M/14T	79-81	1	
KT	043607	NA	Sealing Ring Kit - TH325-4L	18T	82-85	1	
23E	043100X	8628055	Drum Support	Teflon	79-85	3	
24E	031106	8627565	Turbine Shaft	Metal	79-81	1	
25A	043101	8628090	Input Shaft	Teflon	79-85	2	
26F	043118	8634161	1-2 Accumulator	Teflon	79-81	1	
N I	048107	8632588	Governor	Teflon	79-85	1	
27F	043115	8630120	Intermediate Servo pin	Teflon	79-85	2	
28F	043113	8632149	Intermediate Servo piston - inner (2.14")	Teflon	79-85	1	
28F	043114	8630568	Intermediate Servo piston - inner (1.94")	Teflon	79-85	1	
29F	043108	8628123	Intermediate Servo piston - Outer	Teflon	79-85	1	
30F	043107	8630080	Intermediate Servo piston to cover (2.54")	Teflon	79-85	1	
30F	043104	8628697	Intermediate Servo piston to cover (2.36")	Teflon	79-85	1	

SNAP RINGS

ILL	ALTO No.	REF No.	Description	Spec	Year	Qty	Notes
KT	043680	NA	Snap Ring Kit		79-85	1	

BUSHINGS

ILL	ALTO No.	REF No.	Description	Spec	Year	Qty	Notes
KT	043627	NA	Bushing Kit - TH325		79-81	1	
KT	043627A	NA	Bushing Kit - TH325-4L		82-85	1	
38E	032200	8623940	Front Pump body - TH325	Bronze	79-81	1	
38E	043200	8628913	Front Pump body - TH325-4L	Babbit	82-85	1	
39E	031201	8623944	Drive Sprocket support - TH325		79-81	1	
39E	043201	8628915	Drive Sprocket support - TH325-4L		82-85	1	
40E	043202	8628916	Driven Sprocket support		79-85	1	
41A	043214	8628918	Direct Drum - Front		79-85	1	
42A	043204	8628917	Direct Drum - Rear		79-85	1	
43B	043209	8630990	Front Internal Gear assembly	Short	79-85	1	
43B	043205	8628925	Front Internal Gear assembly	Long	79-85	1	
44B	043206	8628925	Rear Sun Gear		79-85	1	
45C	043207	8628929	Low/Reverse Clutch housing		79-85	1	
46C	043208	8628947	Rear Carrier		79-85	1	
N I	043210	8634908	Overrun Drum		82-85	1	
N I	048209	8631905	Overdrive Carrier		82-85	1	

GENERAL MOTORS

TH325 1979-81

TH325-4L 1982-85

WASHERS

ILL	ALTO No.	REF No.	Description	Spec	Year	Qty	Notes
KT	043637	NA	Washer kit - without selectives		79-85	1	
47A	043175A	8632504	Direct to Forward drum - thrust		79-85	1	
48C	043184	8628182	Reaction Carrier to Low Race - thrust		79-85	1	
49C	043185	8628188	Reaction Carrier to Internal gear - thrust		79-85	1	
50B	043176	8628765	Internal gear - thrust		79-85	1	
51B	043177	8628549	Input drum to Housing		79-85	1	Metal
51B	043177X	8628766	Input drum to Housing	.060	79-85	1	Plastic
51B	043177B	NA	Input drum to Housing	.080	79-85	1	Plastic

GENERAL MOTORS

TH350, TH350C 1969-86
TH250, TH250C 1980-84

A>

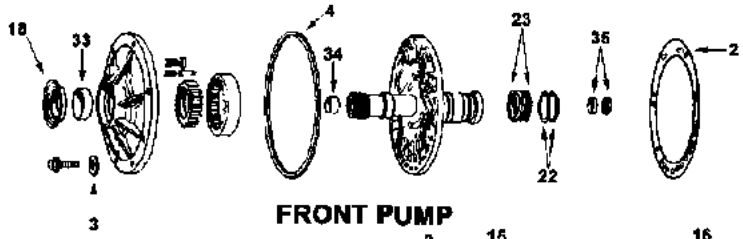

B>

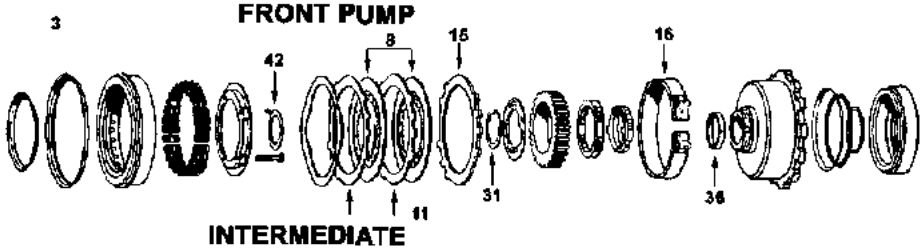

C>

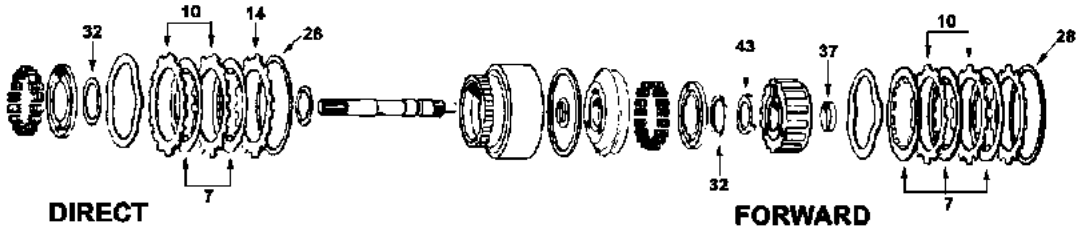

D>

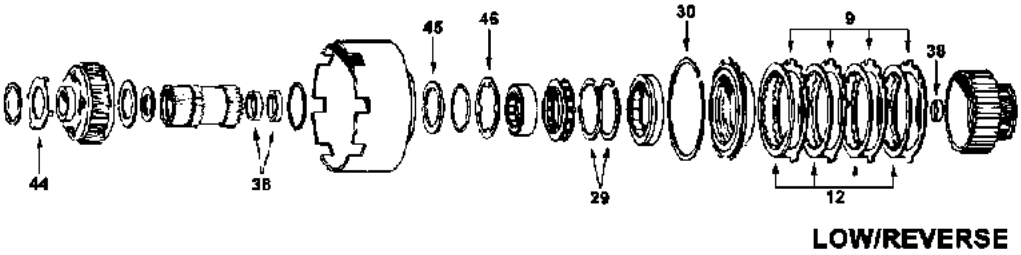

E>

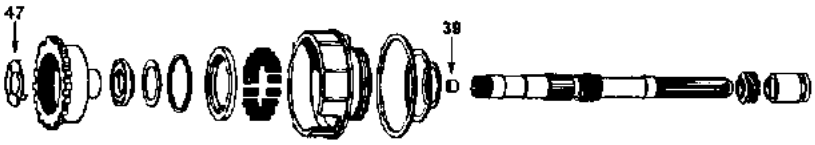

F>

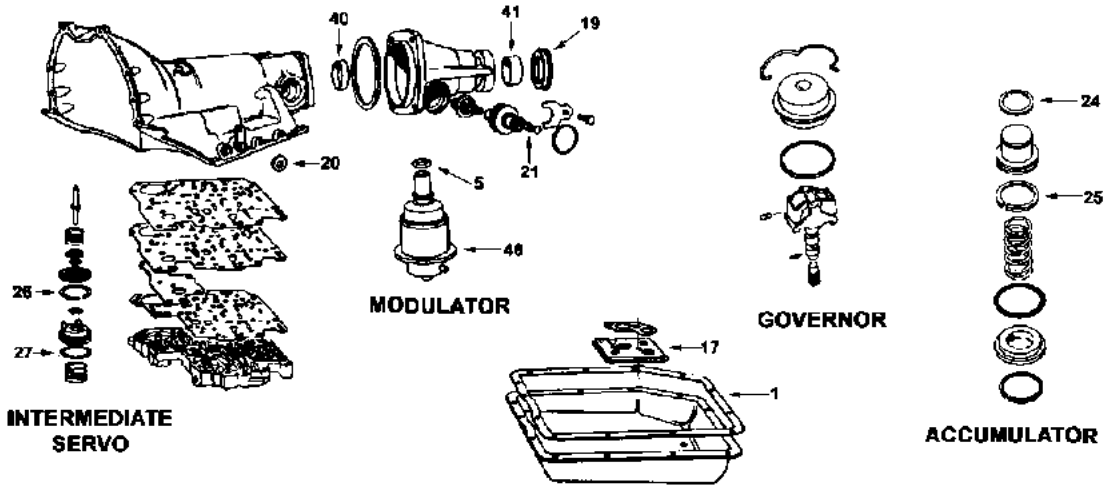

GENERAL MOTORS

TH350, TH350C 1969-86
TH250, TH250C 1980-84

KITS

*Add Suffix SK for Super Kit

ILL	Description	Years	Friction Module	Steel Module	Overhaul Kit	Banner Kit	Master Kit
KT	Rebuilding Kit - TH350	69-79	032752B	032753	032800	032901LS	032901
KT	Rebuilding Kit - TH350 with Short Ring kit	69-79	032752B	032753	032800X	032901XLS	032901X
KT	Rebuilding Kit - TH350c	80-86	032752B	032753	032802	032903LS	032903
KT	Rebuilding Kit - Combo	69-86	032752B	032753	032804	032905LS	032905
KT	Rebuilding Kit - TH250c	80-84	032752A	032753A	032806	032907ALS	032907A
KT	Friction Module - without Intermed Clutches	69-86	032752X				

KITS - HI-PERFORMANCE Red Eagle®

ILL	Description	Years	Friction Module	Steel Module	Overhaul Kit	Banner Kit	Master Kit
KT	Rebuilding Kit - Combo	69-86	032752HP	032753HP	032804HP	032905HPLS	032905HP

MISCELLANEOUS GASKETS & KIT COMPONENTS

ILL	ALTO No.	REF No.	Description	Spec	Year	Qty	Notes
1F	032816	6261649	Gasket, Oil Pan	Cork/Rub	69-86	1	
2A	032001	8640671	Gasket, Front pump to case	Paper	69-86	1	
N I	032306	NA	VB Checkball - .250	Steel	69-86	4-5	
N I	032306C	6261179	VB Checkball - .250	Viton®	69-86	4-5	
3A	032003	3884683	Washer, Front pump bolts		69-86	8	
4A	031050A	6261413	Lathe Cut, Front pump to case		69-86	1	
5F	010115B	6264903	O Ring, Modulator & Electrical connector		69-86	2	

FRICTION CLUTCHES

ILL	ALTO No.	REF No.	Description	Spec	Year	Qty	Notes
7C	032714	NA	Forward	.098	69-86	5	HEG - 20T - OD: 5.920" - PL
7C	032714A155	NA	Forward - thin	.061	69-86	AR	HEG - 20T - OD: 5.920" - SB
7C	032722	8647576	Forward - TH250c	.088	80-84	5	Tan - 20T - OD: 5.913" - PL
7C	032714	NA	Direct	.098	69-86	5	HEG - 20T - OD: 5.920" - PL
7C	032714A155	NA	Direct - thin	.061	69-86	AR	HEG - 20T - OD: 5.920" - SB
7C	032722	8647576	Direct - TH250c	.088	80-84	5	Tan - 20T - OD: 5.913" - PL
8B	032712	NA	Intermediate	.098	69-86	3	HEG - 60T - OD: 7.444" - PL
9D	030702	NA	Low/Reverse	.098	69-86	5	HEG - 25T - OD: 6.461" - SM
9D	030702WF	NA	Low/Reverse	.098	69-86	5	HEG - 25T - OD: 6.461" - WF
9D	057738-220	8684089	Low/Reverse - TH250c	.087	69-86	5	HEG - 25T - OD: 6.461" - SM

FRICTION CLUTCHES - HI-PERFORMANCE - Red Eagle®

ILL	ALTO No.	REF No.	Description	Spec	Year	Qty	Notes
7C	032742	NA	Forward & Direct	.098	69-86	4/5	Red - 20T - OD: 5.916" - SM
7C	032742PL	NA	Forward & Direct	.098	69-86	4/5	Red - 20T - OD: 5.916" - PL
8B	032740	NA	Intermediate	.098	69-86	3	Red - 60T - OD: 7.444" - SM
8B	032740PL	NA	Intermediate	.098	69-86	3	Red - 60T - OD: 7.444" - PL
9D	032744	NA	Low/Reverse	.098	69-86	5	Red - 25T - OD: 6.466" - SM

FRICTION CLUTCHES - HI-PERFORMANCE - UNIT PACKS (ONE Rebuild)

ILL	ALTO No.	REF No.	Description	Spec	Year	Qty	Notes
KT	032742UP9	NA	UNIT PACK - Forward & Direct	.098	69-86	1	9 Red Eagle® Frictions
KT	032740UP3	NA	UNIT PACK - Intermediate	.098	69-86	1	3 Red Eagle® Frictions
KT	032744UP5	NA	UNIT PACK - Low/Reverse	.098	69-86	1	5 Red Eagle® Frictions

GENERAL MOTORS

TH350, TH350C 1969-86
TH250, TH250C 1980-84

STEEL CLUTCHES

ILL	ALTO No.	REF No.	Description	Spec	Year	Qty	Notes
10C	032705	6261071	Forward	.068	69-86	5	12T - ID: 4.863"
10C	032705	6261071	Direct	.068	69-86	4	12T - ID: 4.863"
10C	032729	NA	Forward & Direct - oversize	.090	69-86	AR	12T - ID: 4.863"
11B	032703	8640672	Intermediate	.068	69-86	3	7T - ID: 6.175"
11B	032713	6261450	Intermediate - original style	.068	69-86	3	9T - ID: 6.175"
11B	032703X	NA	Intermediate - oversize	.089	69-86	AR	7T - ID: 6.175"
12D	032701	8680439	Low/Reverse	.068	69-86	5	17T - ID: 5.727"
12D	032701H	24205268	Low/Reverse with Turbulator holes	.068	69-86	5	17T - ID: 5.727"
12D	032731	6261120	Low/Reverse - oversize	.080	69-86	AR	17T - ID: 5.727"
12D	TBA	6260236	Low/Reverse - Dish	.068	69-86	AR	17T - ID: 5.727"

STEEL CLUTCHES - HI-PERFORMANCE - Kolene®

ILL	ALTO No.	REF No.	Description	Spec	Year	Qty	Notes
10C	032705K	NA	Forward & Direct	.068	69-86	5/4	Kol - 12T - ID: 4.863"
10C	032705HK	NA	Forward & Direct with Turbulator holes	.068	69-86	5/4	Kol - 12T - ID: 4.863"
11B	032703K	NA	Intermediate	.068	69-86	2-3	Kol - 7T - ID: 6.175"
12D	032701K	NA	Low/Reverse	.068	69-86	5	Kol - 17T - ID: 5.727"
12D	032701HK	NA	Low/Reverse with Turbulator holes	.068	69-86	5	Kol - 17T - ID: 5.727"

STEEL CLUTCHES - HI-PERFORMANCE - UNIT PACKS (ONE Rebuild)

ILL	ALTO No.	REF No.	Description	Spec	Year	Qty	Notes
KT	032705KUP9	NA	UNIT PACK - Forward & Direct	.068	69-86	1	9 Kolene® Steels
KT	032703KUP3	NA	UNIT PACK - Intermediate	.068	69-86	1	3 Kolene® Steels
KT	032701KUP5	NA	UNIT PACK - Low/Reverse	.068	69-86	1	5 Kolene® Steels
KT	032701HKUP5	NA	UNIT PACK - Low/Rev with Turbulator holes	.068	69-86	1	5 Kolene® Steels

PRESSURE PLATES

ILL	ALTO No.	REF No.	Description	Spec	Year	Qty	Notes
13C	TBA	6261072	Forward	.250	69-86	1	
13C	TBA	6261349	Forward	.280	69-86	1	
13C	TBA	6261350	Forward	.310	69-86	1	
14C	TBA	6261350	Direct	.310	69-86	1	
15B	TBA	8640673	Intermediate		69-86	1	

OEI® Original Equipment Improvements

ILL	ALTO No.	REF No.	Description	Spec	Year	Qty	Notes
KT	032985	SK® 350	VB Shift Kit®	Transgo®	69-86	1	
KT	032987	350-1&2	Reprogramming Kit™- Tow & Go, Competition	Transgo®	69-79	1	
KT	032988	350C-1&2	Reprogramming Kit™- Tow & Go, Competition	Transgo®	80-86	1	
KT	032988A	350-3	Reprogramming Kit™- Tow & Go, Competition	Transgo®	69-86	1	

BANDS

ILL	ALTO No.	REF No.	Description	Spec	Year	Qty	Notes
16B	032950	6261132	Intermediate	Tan	69-86	1	

BANDS - HI-PERFORMANCE - Red Eagle® or Carbonite®

ILL	ALTO No.	REF No.	Description	Spec	Year	Qty	Notes
16B	032960	NA	Intermediate	Red	69-86	1	Red Eagle®

GENERAL MOTORS

TH350, TH350C 1969-86
TH250, TH250C 1980-84

FILTERS

ILL	ALTO No.	REF No.	Description	Spec	Year	Qty	Notes
17F	032940	6438816	Filter, Brass		69-86	1	
17F	032946	8640848	Filter, Nylon		69-86	1	
17F	032948	8641910	Filter, Dacron (felt)		69-86	1	

METAL CLAD SEALS

ILL	ALTO No.	REF No.	Description	Spec	Year	Qty	Notes
18A	032400	8641300	Front Pump	Silicone	69-86	1	
18A	055400	23015975	Front Pump	Vamac®	69-86	1	
19E	032402	1243402	Extension Housing with Flange		69-86	1	
20F	032410C	8657163	Manual Lever	Vamac®	69-86	1	
21F	031057	1240382	Speedometer without spring		69-86	1	
21F	031057A	25519078	Speedometer with spring		69-86	1	

SEALING RINGS

ILL	ALTO No.	REF No.	Description	Spec	Year	Qty	Notes
KT	032600A	C321	Sealing Ring Kit - 5M/4T		69-86	1	
KT	032601	C325	Sealing Ring Kit - 9M/1T		74-86	1	
KT	032601A	C362	Sealing Ring Kit, TH250c - 11M		80-84	1	
KT	032609	C323	Sealing Ring Kit - 12M/1T		69-86	1	
KT	032609T	C328	Sealing Ring Kit - 9T		74-86	1	
KT	032609X	C322	Sealing Ring Kit - 5M		69-86	1	
22A	032100	6261570	Front Pump stator - small	1.957	69-86	2	Metal
23A	032101	6261746	Front Pump stator - Large	2.137	69-86	2	Metal
24F	032102	6261138	Intermediate Accumulator inner (apply)		69-72	1	Metal
24F	032106	6260257	Intermediate Accumulator inner (apply)		73-86	1	Teflon
25F	032103	6261139	Intermediate Accumulator outer (release)		69-72	1	Metal
25F	032107	6260258	Intermediate Accumulator outer (release)		73-86	1	Teflon
26F	032104	6261150	Direct Clutch Accumulator		69-72	1	Metal
26F	032108	6260320	Direct Clutch Accumulator		73-86	1	Teflon
27F	032105	6261151	Intermediate Servo piston		69-72	1	Metal
27F	032108	6260320	Intermediate Servo piston		73-On	1	Teflon
27F	032109	330164	Intermediate Servo piston - TH250	1.500	73-76	1	Metal
27F	032114	8641472	Intermediate Servo piston - TH250c	1.985	80-84	1	Metal
N I	032115	8641473	Intermediate Servo piston cushion		80-84	1	Teflon
N I	048106	8631105	Intermediate Servo band pin - TH250c		80-84	2	Teflon
N I	032113	8640186	Input shaft to Output shaft		77-81	1	Teflon

SNAP RINGS

ILL	ALTO No.	REF No.	Description	Spec	Year	Qty	Notes
KT	032680	NA	Snap Ring Kit		69-86	1	
KT	032252	NA	Snap Ring Kit		69-86	1	

BUSHINGS

ILL	ALTO No.	REF No.	Description	Spec	Year	Qty	Notes
KT	032625	NA	Bushing Kit		69-86	1	
33A	032200	8623940	Front Pump body	Babbit	69-86	1	
34A	032201	NA	Pump Stator - Front	.485	69-86	1	
34A	032212	NA	Pump Stator - Front	.655	80-86	1	
35A	032202	6261022	Pump Stator - Rear		69-86	2	
36B	032203	6261026	Direct drum to pump cover (short)	Bronze	69-86	1	

GENERAL MOTORS

TH350, TH350C 1969-86
TH250, TH250C 1980-84

BUSHINGS

ILL	ALTO No.	REF No.	Description	Spec	Year	Qty	Notes
37C	032204	6261029	Input Ring Gear		69-86	1	
38C	032205	6261033	Sun Gear to Output shaft & Planetary carrier		69-86	3	
39E	032206	3789034	Output pilot shaft		69-86	1	
40F	032207	6261016	Case to output shaft		69-86	1	
41F	032208	6260048	Extension Housing		69-86	1	
N I	031206	NA	Governor bore repair bushing		69-86	1	Special tool required

WASHERS

ILL	ALTO No.	REF No.	Description	Spec	Year	Qty	Notes
KT	032635	NA	Washer Kit		69-86	1	
42B	032150	6261015	Direct drum to Pump cover	.066	69-86	1	
42B	032151	6261013	Direct drum to Pump cover	.083	69-86	1	
42B	032152	6261014	Direct drum to Pump cover	.100	69-86	1	
43C	032154	6261027	Forward Housing to Input ring gear (3 tang)		69-86	1	Metal
43C	032154A	8640060	Forward Housing to Input ring gear (3 tang)		79-86	1	Plastic
44D	032155	6260374	Input Ring gear Support (4 tang)		69-86	1	
45D	032156	6261034	Front Planet (4 tang)		69-86	1	
46D	032157	6261184	Sun Gear shell - Rear (4 tang)		69-86	1	
47E	032158	6261124	Output Ring gear - Front (3 tang)		69-86	1	

MODULATORS

ILL	ALTO No.	REF No.	Description	Spec	Year	Qty	Notes
48F	031525	Various	White Stripe		69-86	1	
48F	031540	Various	Red Stripe		69-86	1	

GENERAL MOTORS

3L80 TH400, TH375 1964-95
TH425, TH475 1966-78

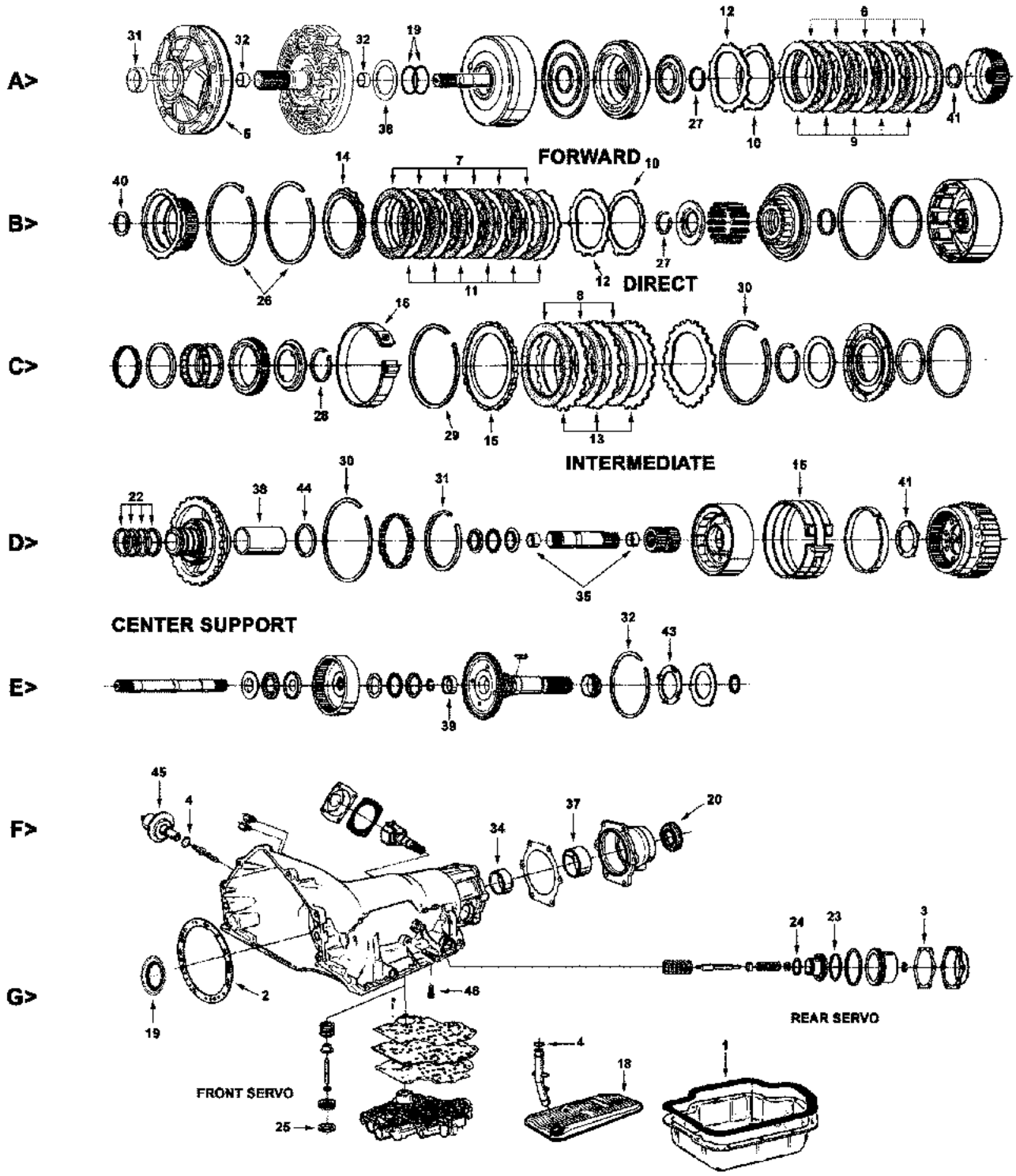

GENERAL MOTORS

3L80 TH400, TH375 1964-95
TH425, TH475 1966-78

KITS

*Add Suffix SK for Super Kit

ILL	Description	Years	Friction Module	Steel Module	Overhaul Kit	Banner Kit	Master Kit
KT	Rebuilding Kit - TH400	65-95	031752	031753	031800	031901LS	031901
KT	Rebuilding Kit - TH400 with Heg Frictions	65-95	031752C	031753	031800	TBA	TBA
KT	Rebuilding Kit - TH400 (short ring kit)	65-95	031752	031753	031800X	031901XLS	031901X
KT	Rebuilding Kit - TH425	66-78	031752	031753	031806	031905LS	031905

KITS - Specialty Kit - with PowerPack®

ILL	Description	Years	Friction and Steel Module	Overhaul Kit	Banner Kit	Master Kit
KT	Rebuilding Kit - TH400 with Intermediate	65-95	031750PWR	031800	NA	031901PWR

KITS - HI-PERFORMANCE Red Eagle®

ILL	Description	Years	Friction Module	Steel Module	Overhaul Kit	Banner Kit	Master Kit
KT	Rebuilding Kit - TH400 with Turbulator steels	65-95	031752HP	031753HP	031800HP	031901HPLS	031901HP

KITS - HI-PERFORMANCE with PowerPack®

ILL	Description	Years	Friction and Steel Module	Overhaul Kit	Banner Kit	Master Kit
KT	Rebuilding Kit - TH400 with Turbulator steels and	65-95	031750AHPPWR	031800HP	NA	031901HPPWR

MISCELLANEOUS GASKETS & KIT COMPONENTS

ILL	ALTO No.	REF No.	Description	Spec	Year	Qty	Notes
1G	031816	8655625	Gasket, Oil Pan - TH400	Cork/Rub	65-95	1	
N I	031816B	8625089	Gasket, Oil Pan - TH425	Cork/Rub	66-78	1	
N I	031820	8625031	Gasket, Sprocket Cover - TH425	Cork/Rub	66-78	1	
2F	031001	8623978	Gasket, Front pump to case		65-95	1	
3F	031006	8623174	Gasket, Rear Servo	Metal	65-95	1	
4F	010115B	6264903	O Ring, Modulator & Electrical connector		65-95	2	
N I	032003	3884683	Washer, Front Pump bolts		65-95	6-8	
5A	031050A	6261413	Lathe Cut, Front Pump to case		65-95	1	

FRICTION CLUTCHES

ILL	ALTO No.	REF No.	Description	Spec	Year	Qty	Notes
6A	031702A200	24202646	Forward	.080	65-95	5	HEG - 42T - OD: 5.893" - PL
7B	031702A200	24202646	Direct	.080	65-95	5	HEG - 42T - OD: 5.893" - PL
8C	031704	8655620	Intermediate - wave	.080	65-95	3	HEG - 47T - OD: 6.561" - SM
8C	031714B203	NA	Intermediate - wave	.080	65-95	3	HEG - 47T - OD: 6.561" - WF
8C	031718	8655620	Intermediate - flat	.090	65-95	3	HEG - 47T - OD: 6.561" - SM
8C	031714-152	NA	Intermediate - PowerPack® component	.060	65-95	AR	HEG - 47T - OD: 6.561" - SM

FRICTION CLUTCHES - HI-PERFORMANCE - Red Eagle®

ILL	ALTO No.	REF No.	Description	Spec	Year	Qty	Notes
6A	031740	NA	Forward & Direct	.080	65-95	10	Red - 42T - OD: 5.901" - SM
6A	031740PL	NA	Forward & Direct	.080	65-95	10	Red - 42T - OD: 5.901" - PL
6A	031740A	NA	Forward & Direct - thin	.061	65-95	AR	Red - 42T - OD: 5.901" - SM
6A	031740AK	NA	Forward & Direct - thin	.061	65-95	AR	Kev - 42T - OD: 5.901" - SM
8C	031742	NA	Intermediate	.090	65-95	3	Red - 47T - OD: 6.557" - SM
8C	031742PL	NA	Intermediate	.090	65-95	3	Red - 47T - OD: 6.557" - PL
8C	031742A	NA	Intermediate - thin	.060	65-95	AR	Red - 47T - OD: 6.557" - SM
8C	031742AK	NA	Intermediate - thin	.060	65-95	AR	Kev - 47T - OD: 6.561" - SM

GENERAL MOTORS

3L80 TH400, TH375 1964-95
TH425, TH475 1966-78

FRICTION CLUTCHES - HI-PERFORMANCE - UNIT PACKS (ONE Rebuild)

ILL	ALTO No.	REF No.	Description	Spec	Year	Qty	Notes
KT	031740UP5	NA	UNIT PACK - Forward & Direct	.080	65-95	1	5 Red Eagle® Frictions
KT	031740AUP6	NA	UNIT PACK - Forward & Direct - thin	.061	65-95	1	6 Red Eagle® Frictions
KT	031742UP3	NA	UNIT PACK - Intermediate	.090	65-95	1	3 Red Eagle® Frictions
KT	031742AUP5	NA	UNIT PACK - Intermediate - thin	.060	65-95	1	5 Red Eagle® Frictions

STEEL CLUTCHES

ILL	ALTO No.	REF No.	Description	Spec	Year	Qty	Notes
9A	031701	8623113	Forward - wave	.068	64	5	12T - ID: 4.585"
9A	031703	8623849	Forward - flat	.077	65-95	4	12T - ID: 4.585"
9A	031711	8625197	Forward	.090	68-95	4	12T - ID: 4.575"
9A	031701A	NA	Forward - selective	.060	65-95	AR	12T - ID: 4.585"
12A	031707	8679940	Forward - wave	.060	65-95	AR	12T - ID: 4.585"
11B	031701	8623113	Direct - wave	.068	64	5	12T - ID: 4.585"
11B	031711	8625197	Direct	.090	68-95	4-5	12T - ID: 4.575"
11B	031701A	NA	Direct - selective	.060	65-95	AR	12T - ID: 4.585"
12B	031707	8679940	Direct - wave	.060	65-95	AR	12T - ID: 4.585"
10A	031767D137	8680816	Forward & Direct cushion spring - belleville	.054	65-95	2	2Tab - ID: 4.800"
13C	031705	8655621	Intermediate	.100	65-95	3	21T - ID: 5.000"
13C	031705-160	NA	Intermediate	.063	65-95	AR	21T - ID: 5.000"
13C	031715	NA	Intermediate - PowerPack® component	.076	65-95	AR	21T - ID: 5.000"
13C	031709	8624199	Intermediate - wave	.070	66-95	AR	21T - ID: 5.000"

STEEL CLUTCHES - HI-PERFORMANCE - Kolene®

ILL	ALTO No.	REF No.	Description	Spec	Year	Qty	Notes
9A	031701K	NA	Forward & Direct - wave	.068	64-95	5/4	Kol - 12T - ID: 4.585"
9A	031701HK	NA	Forward & Direct - wave with Turbulator holes	.068	64-95	5/4	Kol - 12T - ID: 4.585"
9A	031703K	NA	Forward - flat	.077	65-95	4	Kol - 12T - ID: 4.585"
9A	031711K	NA	Forward & Direct	.090	68-95	4	Kol - 12T - ID: 4.575"
9A	031711HK	NA	Forward & Direct with Turbulator holes	.090	68-95	4	Kol - 12T - ID: 4.575"
9A	031701AK	NA	Forward & Direct - PowerPack® component	.060	65-95	AR	Kol - 12T - ID: 4.585"
13C	031705K	NA	Intermediate	.100	65-95	3	Kol - 21T - ID: 5.000"
13C	031705HK	NA	Intermediate with Turbulator holes	.100	65-95	3	Kol - 21T - ID: 5.000"
13C	031705K160	NA	Intermediate	.063	65-95	AR	Kol - 21T - ID: 5.000"
13C	031715K	NA	Intermediate - PowerPack® component	.076	65-95	AR	Kol - 21T - ID: 5.000"
13C	031715AK	NA	Intermediate - PowerPack® component	.076	65-95	AR	Kol - 21T - ID: 5.190"
13C	031715HK	NA	Intermediate - PowerPack® component	.076	65-95	AR	Kol - 21T - ID: 5.000"

STEEL CLUTCHES - HI-PERFORMANCE - UNIT PACKS (ONE Rebuild)

ILL	ALTO No.	REF No.	Description	Spec	Year	Qty	Notes
KT	031701AKUP6	NA	UNIT PACK - Forward & Direct	.060	64-95	1	6 Kolene® Steels
KT	031703KUP4	NA	UNIT PACK - Forward & Direct	.077	65-95	1	4 Kolene® Steels
KT	031711KUP5	NA	UNIT PACK - Forward & Direct	.090	68-95	1	5 Kolene® Steels
KT	031705KUP3	NA	UNIT PACK - Intermediate	.100	64-95	1	3 Kolene® Steels
KT	031705K160UP 5	NA	UNIT PACK - Intermediate	.063	64-95	1	5 Kolene® Steels

PRESSURE PLATES

ILL	ALTO No.	REF No.	Description	Spec	Year	Qty	Notes
14B	031761AP102	8661575	Direct - backing	.400	64-95	1	14T - ID: 4.565"
14B	031761A939	NA	Direct - PowerPack® Component	.370	64-95	1	14T - ID: 4.565"
15C	TBA	8623152	Intermediate - backing	.430	64-95	1	

GENERAL MOTORS

3L80 TH400, TH375 1964-95
TH425, TH475 1966-78

OEI® Original Equipment Improvements

ILL	ALTO No.	REF No.	Description	Spec	Year	Qty	Notes
KT	031755HP	NA	PowerPack® - Forward clutch		64-95	1	Red Eagle® & Kolene®
KT	031756HP	NA	PowerPack® - Direct Clutch		64-95	1	Red Eagle® & Kolene®
KT	031757	NA	PowerPack® - Intermediate Clutch		64-95	1	Tan Frictions
KT	031757HP	NA	PowerPack® - Intermediate Clutch		64-95	1	Red Eagle® & Kolene®
KT	031985	SK® 400	VB Shift Kit®	Transgo®	64-95	1	
KT	031986	SK® 425	VB Shift Kit®	Transgo®	64-95	1	
KT	031988	400-1&2	Reprogramming Kit™ - tow & go & HP	Transgo®	64-95	1	
KT	031988A	400-3	Reprogramming Kit™ - converts to manual shift	Transgo®	64-95	1	
KT	031989	425-1	Reprogramming Kit™	Transgo®	66-78	1	

BANDS

ILL	ALTO No.	REF No.	Description	Spec	Year	Qty	Notes
16C	031950	24202631	Front band	Tan	64-95	1	
17D	031952	24200468	Rear band - double wrap	Tan	64-95	1	

BANDS - HI-PERFORMANCE - Red Eagle® or Carbonite®

ILL	ALTO No.	REF No.	Description	Spec	Year	Qty	Notes
16C	031960	NA	Front Band	Red	64-95	1	Red Eagle®

FILTERS

ILL	ALTO No.	REF No.	Description	Spec	Year	Qty	Notes
N I	031940	5579822	Filter with tube TH400		64-67	1	
18G	031944	6438326	Filter with Dacron (felt) screen TH400, 3L80		67-95	1	
18G	031946	6438326	Filter with stainless steel screen TH400, 3L80		67-95	1	
18G	031948A	NA	Filter with brass screen TH400, 3L80		67-95	1	

METAL CLAD SEALS

ILL	ALTO No.	REF No.	Description	Spec	Year	Qty	Notes
19G	032400	8654716	Front Pump	Silicone	67-95	1	
19G	055400	8670283	Front Pump	Vamac®	64-95	1	
20F	031401	8625892	Extension Housing	2.500	64-77	1	
20F	031402	8675730	Extension Housing	2.700	64-95	1	
20F	031403	8675731	Extension Housing (TH475)		64-95	1	
20F	032402	3932255	Extension Housing (TH375)	2.380	72-76	1	
N I	032410C	8657163	Manual Lever		64-95	1	
N I	031057	1240382	Speedo seal without spring	Silicone	64-95	1	
N I	031057A	25519078	Speedo seal with spring	Vamac®	64-95	1	

SEALING RINGS

ILL	ALTO No.	REF No.	Description	Spec	Year	Qty	Notes
KT	031600	C312	Sealing Ring Kit - 10M		71-95	1	
KT	031600A	C311	Sealing Ring Kit - 6M		64-95	1	
KT	031600T	C316	Sealing Ring Kit - 10T		64-95	1	
21A	031100	8626356	Front Pump stator	2.062	64-95	2	Metal
22D	031100	8626356	Center Support	2.062	64-95	4	Metal
21A	031110	NA	Front Pump stator & Center support	Teflon	64-95	6	
23F	031101	8623672	Accumulator Piston - outer	Metal	64-70	1	
23F	031107	NA	Accumulator Piston - outer	Metal	71-95	1	
23F	031108	8627153	Accumulator Piston - outer	Teflon	71-95	1	
24F	031102	8623671	Accumulator Piston - inner	Metal	64-95	1	
24F	031112	NA	Accumulator Piston - inner	Teflon	64-95	1	
25G	031104	8623131	Front Servo piston	Metal	64-95	1	

GENERAL MOTORS

3L80 TH400, TH375 1964-95
TH425, TH475 1966-78

SEALING RINGS

ILL	ALTO No.	REF No.	Description	Spec	Year	Qty	Notes
25G	031104	8623131	Front Servo piston	Metal	64-95	1	
N I	031105	8623653	Accumulator piston control valve	Metal	64-95	1	
N I	031106	8623296	Turbine Shaft	Metal	65-67	1	

SNAP RINGS

ILL	ALTO No.	REF No.	Description	Spec	Year	Qty	Notes
26B	A40048M	12547465	Transfer Case - Front Case Bearing		64-95	2	
26B	031250	8623112	Forward & Direct drum		64-95	2	
30C	028252-106	8623437	Center support to case (Intermediate)		64-95	2	

BUSHINGS

ILL	ALTO No.	REF No.	Description	Spec	Year	Qty	Notes
KT	031625	NA	Bushing Kit		64-95	1	
33A	032200	8623940	Front Pump body		64-95	1	
34A	031201	8623944	Stator support - Front & Rear		64-95	2	
35D	031201	8623944	Sun Gear shaft - Front & Rear		64-95	2	
36F	031202	8623941	Case		64-95	1	
37F	031203	8619943	Extension Housing	1.240	64-70	1	
37F	029201	8618167	Extension Housing - Cadillac	.875	64-67	1	
37F	TBA	8626901	Extension Housing	1.000	64-95	1	
37F	031207	8623966	Extension Housing	1.500	64-95	1	
37F	032208	6260048	Extension Housing (TH375)		64-95	1	
38D	031205	8623942	Center Support		64-95	1	
39E	031208	8653985	Output Shaft - narrow		74-95	1	
39E	031208A	8623943	Output Shaft - wide		64-95	1	
N I	031210	NA	Reaction Carrier		64-95	1	

WASHERS

ILL	ALTO No.	REF No.	Description	Spec	Year	Qty	Notes
KT	031635	NA	Washer Kit		64-95	1	
40A	031150	8623300	Front Pump cover to Forward drum	.063	64-95	1	Yellow
40A	031151	8623301	Front Pump cover to Forward drum	.075	64-95	1	Blue
40A	031152	8623302	Front Pump cover to Forward drum	.083	64-95	1	Red
40A	031153	8623303	Front Pump cover to Forward drum	.094	64-95	1	Brown
40A	031154	8623304	Front Pump cover to Forward drum	.106	64-95	1	Green
40A	031155	8623305	Front Pump cover to Forward drum	.118	64-95	1	Black
40A	031156	8623306	Front Pump cover to Forward drum	.130	64-95	1	Purple
41A	031158	8624196	Forward clutch hub to Direct drum		64-95	1	
42B	031157	8624781	Forward clutch hub to Direct clutch hub		64-95	1	
43D	031160	8626372	Output Shaft to case front (4 tangs)	Metal	64-95	1	
44D	031172	8623211	Center Support to reaction drum		64-95	1	

MODULATORS

ILL	ALTO No.	REF No.	Description	Spec	Year	Qty	Notes
45F	031525	NA	Modulator - White stripe		64-95	1	
45F	031540	NA	Modulator - Red stripe		64-95	1	

MISCELLANEOUS

ILL	ALTO No.	REF No.	Description	Spec	Year	Qty	Notes
46G	TBA	8670757	Bolt, Center Support to case		64-95	1	

GENERAL MOTORS

4L80E,4L85E

1990-On

A>

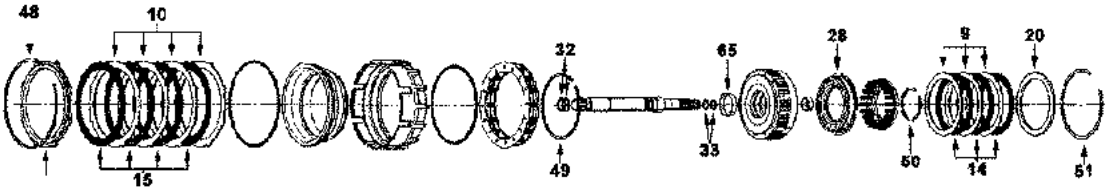

OVERDRIVE (4th)

OVERRUN

B>

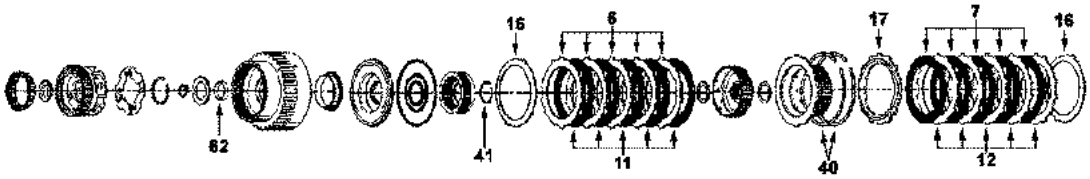

FORWARD

DIRECT

C>

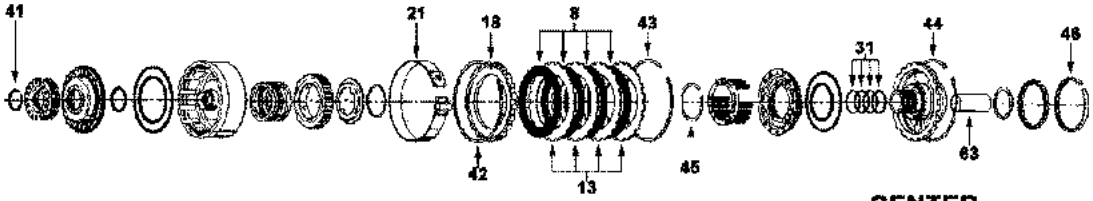

INTERMEDIATE

CENTER SUPPORT

D>

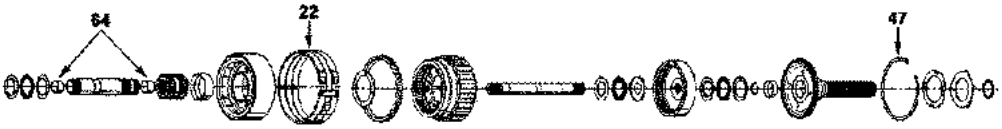

OUTPUT SHAFT

E>

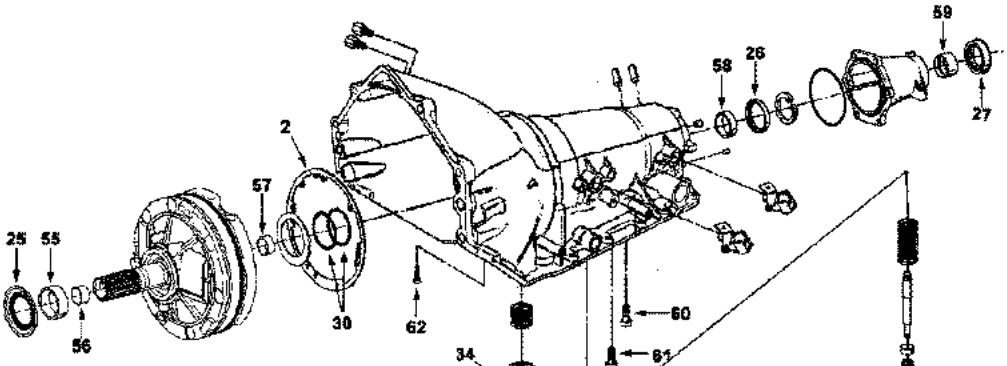

FRONT PUMP

F>

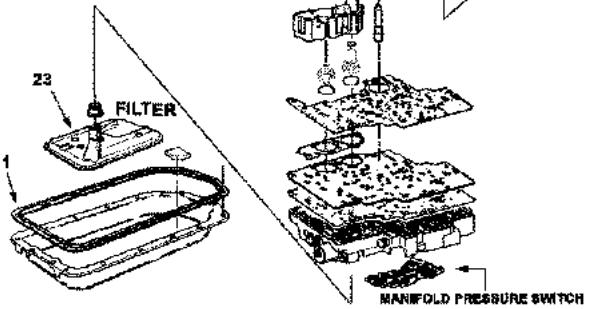

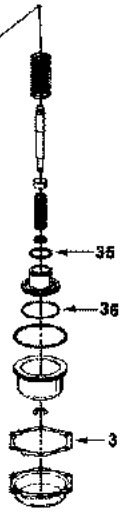

GENERAL MOTORS

4L80E,4L85E

1990-On

KITS

*Add Suffix SK for Super Kit

ILL	Description	Years	Friction Module	Steel Module	Overhaul Kit	Banner Kit	Master Kit
KT	Rebuilding Kit without Molded Pistons	90-96	031752A	031753A	031804	031903LS	031903
KT	Rebuilding Kit without Molded Pistons	97-On	031752B	031753B	031804A	031903ALS	031903A
KT	Overhaul Kit with Molded Pistons	97-On	TBA	TBA	031804B	TBA	TBA

KITS - Specialty Kit - with PowerPack®

ILL	Description	Years	Friction and Steel Module	Overhaul Kit	Banner Kit	Master Kit
KT	Rebuilding Kit with Intermediate PowerPack®	90-96	031750APWR	031804	NA	031903PWR

KITS - HI-PERFORMANCE Red Eagle® - with PowerPack®

ILL	Description	Years	Friction and Steel Module	Overhaul Kit	Banner Kit	Master Kit
KT	Rebuilding Kit with Intermediate PowerPack®	97-On	031750BHPPWR	031804AHP	NA	031903AHPPWR
KT	Rebuilding Kit with PowerPack®	90-96	031750BHPPWR	031804AHP	NA	031903AHPPWR

KITS - HI-PERFORMANCE Red Eagle®

ILL	Description	Years	Friction Module	Steel Module	Overhaul Kit	Banner Kit	Master Kit
KT	Rebuilding Kit Farpak/Teflon rings (without Pistons)	90-96	031752AHP	031753AHP	031804HP	031903HPLS	031903HP
KT	Rebuilding Kit Farpak (without Pistons)	97-On	031752BHP	031753AHP	031804AHP	031903AHPLS	031903AHP

MISCELLANEOUS GASKETS & KIT COMPONENTS

ILL	ALTO No.	REF No.	Description	Spec	Year	Qty	Notes
1F	031816A	NA	Gasket, Oil Pan except Jaguar	Cork/Rub	90-On	1	
1F	031816F	NA	Gasket, Oil Pan except Jaguar	Fiber	90-On	1	
1F	031816C	JLM010975	Gasket, Oil Pan - Jaguar only		93-On	1	
2E	031001A	8677782	Gasket, Front Pump Gasket		90-On	1	
3F	031006A	8675728	Gasket, Rear Servo cover	Metal	90-On	1	
N I	M001001	24205103	Cooler line Retainer clip		96-On	2	
N I	031315	24206031	Bolt, Front Pump		90-On	1	
60F	TBA	8661762	Bolt, Case to Center Support		90-On	1	3/8 - 16 x 1.07
61F	TBA	8686124	Bolt, Case to Overdrive (4th)		90-On	1	5/16 - 18 x .96

FRICTION CLUTCHES

ILL	ALTO No.	REF No.	Description	Spec	Year	Qty	Notes
6B	031702A200	24204439	Forward	.080	90-On	5	HEG - 42T - OD: 5.893" - PL
7B	031702A200	24204439	Direct	.080	90-On	5	HEG - 42T - OD: 5.893" - PL
8C	031714	8675521	Intermediate	.080	90-96	4	Tan - 47T - OD: 6.561" - SM
8C	031714A200	NA	Intermediate	.080	90-96	4	HEG - 47T - OD: 6.561" - PL
8C	031714K180	24202966	Intermediate	.071	97-On	4	HEG - 47T - OD: 6.561" - SM
8C	031714-152	NA	Intermediate - PowerPack® component	.060	90-On	5	HEG - 47T - OD: 6.561" - PL
9A	031720	8661571	Overrun	.080	90-On	3	HEG - 45T - OD: 5.374" - SM
10A	031722	8682802	Overdrive (4th)	.080	90-On	4	HEG - 60T - OD: 7.299" - SM
N I	185710-165	88935701	Transfer Case (NVG 126C. 226C) (1 sided) - internal spline	.065/1.65	02-On	9	HEG - 50T - OD: 4.989" - SB
N I	185711-165	88935700	Transfer Case (NVG 126C. 226C) (1 sided) - external spline	.065/1.65	02-On	9	HEG - 16T - ID: 3.815" - SB
N I	126700	12547607	Transfer case (NVG 246)	.087	98-On	10	HEG - 54T - OD: 6.080" - SM

FRICTION CLUTCHES - HI-PERFORMANCE - Red Eagle®

ILL	ALTO No.	REF No.	Description	Spec	Year	Qty	Notes
6B	031740	NA	Forward & Direct	.080	90-On	5/5	Red - 42T - OD: 5.901" - SM
6B	031740A	NA	Forward & Direct - Thin	.061	90-On	AR	Red - 42T - OD: 5.901" - SM
8C	031744-200	NA	Intermediate	.080	90-96	4	Red - 47T - OD: 6.561" - SM

GENERAL MOTORS

4L80E,4L85E

1990-On

FRICTION CLUTCHES - HI-PERFORMANCE - Red Eagle®

ILL	ALTO No.	REF No.	Description	Spec	Year	Qty	Notes
8C	031742A	NA	Intermediate - PowerPack® component	.060	90-On	AR	Red - 47T - OD: 6.557" - SM
8C	031742AK	NA	Intermediate - thin	.060	90-On	AR	Kev - 47T - OD: 6.561" - SM
9A	031746-200	NA	Overrun (4th)	.080	90-On	3	Red - 45T - OD: 5.374" - PLI
10A	031748-200	NA	Overdrive (4th)	.080	90-On	4	Red - 60T - OD: 7.299" - PLI

FRICTION CLUTCHES - HI-PERFORMANCE - UNIT PACKS (ONE Rebuild)

ILL	ALTO No.	REF No.	Description	Spec	Year	Qty	Notes
KT	031740UP5	NA	UNIT PACK - Forward & Direct	.080	90-On	1	5 Red Eagle® Frictions
KT	031740AUP6	NA	UNIT PACK - Forward & Direct - thin	.061	90-On	1	6 Red Eagle® Frictions
KT	031744UP4	NA	UNIT PACK - Intermediate	.080	90-96	1	4 Red Eagle® Frictions
KT	031742AUP5	NA	UNIT PACK - Intermediate - thin	.060	90-On	1	5 Red Eagle® Frictions
KT	031746UP3	NA	UNIT PACK - Overrun (4th)	.080	90-On	1	3 Red Eagle® Frictions
KT	031748UP4	NA	UNIT PACK - Overdrive (4th)	.080	90-On	1	4 Red Eagle® Frictions

STEEL CLUTCHES

ILL	ALTO No.	REF No.	Description	Spec	Year	Qty	Notes
11B	031703	8623849	Forward	.077	90-On	5	12T - ID: 4.585"
12B	031711	8625197	Direct	.090	90-On	5	12T - ID: 4.575"
11B	031701A	NA	Direct - PowerPack® component	.060	90-On	AR	12T - ID: 4.585"
13C	031715	8675522	Intermediate	.076	90-On	4	21T - ID: 5.000"
13C	031705-160	NA	Intermediate - PowerPack® component	.063	90-On	AR	21T - ID: 5.000"
N I	TBA	24204497	Intermediate - wave		97-On	1	
14A	031721	8661569	Overrun	.099	90-96	3	14T - ID: 4.520"
14A	031721H	24204287	Overrun with Turbulator holes (does retro)	.099	97-On	3	14T - ID: 4.520"
15A	031723	8661579	Overdrive	.099	90-96	4	8T - ID: 6.300"
15A	031723-152	8661579	Overdrive - PowerPack® component	.060	91-On	AR	8T - ID: 6.300"
15A	031723H	24204283	Overdrive with Turbulator holes (does retro)	.099	97-On	4	8T - ID: 6.300"
N I	126701	12547608	Transfer Case (NVG 246)	.067	98-On	10	12T - ID: 5.023"

STEEL CLUTCHES - HI-PERFORMANCE - Kolene®

ILL	ALTO No.	REF No.	Description	Spec	Year	Qty	Notes
11B	031703K	NA	Forward	.077	90-On	5	Kol - 12T - ID: 4.585"
11B	031703HK	NA	Forward - with Turbulator holes	.077	90-On	5	Kol - 12T - ID: 4.585"
11B	031701AK	NA	Forward - PowerPack® Component	.060	90-On	AR	Kol - 12T - ID: 4.585"
12B	031711K	NA	Direct	.090	90-On	5	Kol - 12T - ID: 4.575"
12B	031711HK	NA	Direct - with Turbulator holes	.090	90-On	5	Kol - 12T - ID: 4.575"
13C	031715K	NA	Intermediate	.076	90-On	4	Kol - 21T - ID: 5.000"
13C	031715HK	NA	Intermediate - with Turbulator holes	.076	90-On	4	Kol - 21T - ID: 5.000"
13C	031705K160	NA	Intermediate	.063	90-On	AR	Kol - PowerPack® Component
13C	031705HK160	NA	Intermediate - with Turbulator holes	.063	90-On	AR	Kol - PowerPack® Component
14A	031721HK	NA	Overrun - with Turbulator Holes	.099	90-On	3	Kol - 14T - ID: 4.520"
15A	031723HK	NA	Overdrive - with Turbulator Holes	.099	90-On	4	Kol - 8T - ID: 6.300"
15A	031723K152	NA	Overdrive - PowerPack® Component	.060	90-On	AR	Kol - 8T - ID: 6.300"

STEEL CLUTCHES - HI-PERFORMANCE - UNIT PACKS (ONE Rebuild)

ILL	ALTO No.	REF No.	Description	Spec	Year	Qty	Notes
KT	031703KUP5	NA	UNIT PACK - Forward	.077	90-On	1	5 Kolene® Steels
KT	031711KUP5	NA	UNIT PACK - Direct	.090	90-On	1	5 Kolene® Steels
KT	031705K160UP 5	NA	UNIT PACK - Intermediate	.063	90-On	1	5 Kolene® Steels

GENERAL MOTORS

4L80E,4L85E

1990-On

PRESSURE PLATES

ILL	ALTO No.	REF No.	Description	Spec	Year	Qty	Notes
16B	031767D137	8680816	Forward & Direct cushion spring - belleville	.054	90-97	1	2T - ID: 4.808"
N I	031711-325	NA	Forward apply - PowerPack® component	.128	98-On	1	12T - ID: 4.585"
17B	031761AP102	8675557	Direct Clutch - backing	.400	90-On	1	14T - ID: 4.565"
18C	TBA	8675519	Intermediate Clutch - backing		90-99	1	
18C	TBA	24205827	Intermediate Clutch - backing		99-On	1	
19A	TBA	8661582	Overdrive Clutch - backing		90-99	1	
19A	TBA	24205818	Overdrive Clutch - backing		99-On	1	

OEI® Original Equipment Improvements

ILL	ALTO No.	REF No.	Description	Spec	Year	Qty	Notes
KT	031755AHP	NA	PowerPack® - Forward clutch Hi-Performance		90-On	1	Red Eagle®
KT	031756HP	NA	PowerPack® - Direct clutch Hi-Performance		90-On	1	Red Eagle®
KT	031757A	NA	PowerPack® - Intermediate Clutch	Tan	90-On	1	
KT	031757AHP	NA	PowerPack® - Intermediate Clutch Hi-Performance	Red	90-On	1	Red Eagle®
KT	031758HP	NA	PowerPack® - Overdrive	Red	90-On	1	Red Eagle®
KT	031750BPS	NA	OEI® Kit 4L80E - Friction/Steel Module contains Forward, Direct & Intermediate PowerPacks® & Red Eagle® Band		97-On	1	Red Eagle®
KT	031987	SK® 4L80	VB Shift Kit®	Transgo®	90-On	1	Corrects Hi/Low pressure
KT	031987A	4L80E-HTRK	VB Shift Kit®	Transgo®	90-On	1	Corrects non-lockup&cl burn
KT	031991	4L80E-HD2	Reprogramming Kit™	Transgo®	90-On	1	
KT	031991A	4L80E-3	Reprogramming Kit™	Transgo®	90-On	1	Converts to full manual

BANDS

ILL	ALTO No.	REF No.	Description	Spec	Year	Qty	Notes
21C	031953	24210080	Front (Manual 2-1)	Tan	90-On	1	1 1/4" wide
22D	031952	24202229	Rear (Low/Reverse)	Tan	90-On	1	

BANDS - HI-PERFORMANCE - Red Eagle® or Carbonite®

ILL	ALTO No.	REF No.	Description	Spec	Year	Qty	Notes
21C	031960	NA	Front (Manual 2-1)	Red	90-On	1	Red Eagle®

FILTERS

ILL	ALTO No.	REF No.	Description	Spec	Year	Qty	Notes
23F	031944A	8678757	Filter		90-96	1	
23F	031944B	24210468	Filter		97-On	1	
62E	TBA	8661834	Screen, PWM Solenoid		90-On	1	

METAL CLAD SEALS

ILL	ALTO No.	REF No.	Description	Spec	Year	Qty	Notes
25E	031400A	24209839	Front Pump		90-On	1	
26E	031406	8675517	Case Seal (Rear Lube)		90-On	1	
N I	031406A	24203511	Rear Cooler Pipe to Center Support		90-On	1	
27E	031403	8675731	Extension Housing without boot-heavy duty		90-On	1	
27E	031404	8675730	Extension Housing without boot		90-On	1	
27E	031405	8677463	Extension Housing with boot		90-On	1	
N I	032410C	8623056	Manual Lever		90-On	1	

SEALING RINGS

ILL	ALTO No.	REF No.	Description	Spec	Year	Qty	Notes
KT	031601	C375	Sealing Ring Kit - 13T		90-On	1	

GENERAL MOTORS

4L80E,4L85E

1990-On

SEALING RINGS

ILL	ALTO No.	REF No.	Description	Spec	Year	Qty	Notes
30E	031120	8661789	Front Pump	Teflon	90-97	2	
30E	031120A	24205833	Front Pump	Peak®	98-On	2	
31C	031121	8675729	Center Support	Teflon	90-97	4	
31C	031121A	24205722	Center Support	Peak®	98-On	4	
32A	031122	8661894	Turbine Shaft to Stator housing		90-On	2	
33A	031123	8661893	Turbine Shaft to Forward housing		90-On	2	
34F	031104	8623131	Front Servo	Metal	90-On	1	
34F	031124	8626423	Front Servo	Teflon	90-On	1	
35F	031102	8623671	Rear Servo Accumulator - inner		90-On	1	
36F	031108	8627153	Rear Servo Accumulator - outer		90-On	1	

SNAP RINGS

ILL	ALTO No.	REF No.	Description	Spec	Year	Qty	Notes
40B	031250	8623112	Forward & Direct Drum		90-On	2	
43C	028252-106	8623437	Center support to case - Front		90-On	1	

BUSHINGS

ILL	ALTO No.	REF No.	Description	Spec	Year	Qty	Notes
KT	031625A	NA	Bushing Kit		90-96	1	
KT	031630A	NA	Short Bushing Kit (3 bushings)		90-96	1	
KT	031625B	NA	Bushing Kit		97-On	1	
KT	031630B	NA	Short Bushing Kit (3 bushings)		97-On	1	
55E	031200A	8682195	Front Pump body - narrow	.559	90-96	1	
55E	031200B	24205783	Front Pump body - wide	.699	97-On	1	
56E	031211	8683008	Front Pump stator - Front		90-On	1	
58E	031212	8677221	Case		90-On	1	
59E	031213	8661368	Extension Housing		90-On	1	
59E	031214	8661614	Forward Clutch Drum		90-On	1	
59E	031215	8661284	Rear Stator		90-On	1	
63C	031216	8655622	Center Support	3.500	90-96	1	
63C	031216A	24203510	Center Support	4.000	97-On	1	
64D	031201	8623075	Sun Gear Shaft		90-96	2	
64D	031217	24207201	Sun Gear Shaft - with oil grooves		97-On	2	
65A	031218	8661604	Overrun Clutch Housing		90-On	1	

WASHERS

ILL	ALTO No.	REF No.	Description	Spec	Year	Qty	Notes
KT	031635A	NA	Washer Kit		90-On	1	

ELECTRONIC CONTROL COMPONENTS

ILL	ALTO No.	REF No.	Description	Spec	Year	Qty	Notes
N I	031501A	24220158 50058	Solenoid EPC Variable Force Motor (BW)		91-03	1	
N I	031503	24210864	Solenoid PWM/TCC		90-On	1	
N I	031504	24225320 50105	Solenoid EPC Variable Force Motor - Holly design (BW)		04-On	1	

PISTONS

ILL	ALTO No.	REF No.	Description	Spec	Year	Qty	Notes
KT	031670B	NA	Piston Kit		97-02	1	contains 3 pistons
28A	031333	8661567	Molded Piston - Overrun clutch drum		90-On	1	

GENERAL MOTORS

4L80E,4L85E

1990-On

PISTONS

ILL	ALTO No.	REF No.	Description	Spec	Year	Qty	Notes
N I	031326	24204957	Molded Piston - Forward drum		97-On	1	
N I	031331	24207501	Molded Piston - Forward center sleeve		97-On	1	
N I	031325	24204961	Molded Piston - Direct drum		97-On	1	

HARD PARTS

ILL	ALTO No.	REF No.	Description	Spec	Year	Qty	Notes
N I	031354	NA	Transmission Case		97-On	1	
N I	031355B	NA	Pump Stator		97-On	1	

GENERAL MOTORS

6L45E, 6L50E

2007-On

KITS

*Add Suffix SK for Super Kit

ILL	Description	Years	Friction Module	Steel Module	Overhaul Kit	Banner Kit	Master Kit
KT	Rebuilding Kit - 6L50E Cadillac CTS, SRX, STS with Molded Pistons	07-On	201752	201753	201800	201901LS	201901
KT	Rebuilding Kit - 6L50E Cadillac CTS, SRX, STS without Molded Pistons	07-On	201752	201753	201800X	201901XLS	201901X
KT	Rebuilding Kit - 6L45E BMW with Molded Pistons	07-On	201752	201753	201800	201901LS	201901
KT	Rebuilding Kit - 6L45E BMW without Molded Pistons	07-On	201752	201753	201800X	201901XLS	201901X

FRICTION CLUTCHES

ILL	ALTO No.	REF No.	Description	Spec	Year	Qty	Notes
N I	201700-160	24233534	1-2-3-4 Clutch	.063	07-On	5	HEG - 36T - OD: 6.690" - PLNI
N I	201702-185	24225569	3-5-Rev Clutch	.073	07-On	4	HEG - 36T - OD: 7.180" - PLNI
N I	201704-200	24225570	4-5-6 Clutch (1 sided) - internal spline	.079	07-On	6	HEG - 36T - OD: 4.940" - PLNI
N I	201705A198	24225575	4-5-6 Clutch (1 sided) - external spline	.078	07-On	6	HEG - 36T - ID: 4.130 - PLNI
N I	201706-250	24235454	2-6 Clutch (1 sided) - internal spline	.099	07-On	5	HEG - 36T - OD: 7.240" - SB
N I	201707A210	24235455	2-6 Clutch (1 sided) - external spline	.083	07-On	5	HEG - 24T - ID: 6.350" - SB
N I	201708-160	24236664	Low/Reverse Clutch	.063	07-On	5	HEG - 54T - OD: 6.960" - SB

STEEL CLUTCHES

ILL	ALTO No.	REF No.	Description	Spec	Year	Qty	Notes
N I	201701-175	24232652	1-2-3-4 Clutch	.069	07-On	5	9T (3 tabs per tooth) - ID: 6.150"
N I	201703-250	24237663	3-5-Rev Clutch	.098	07-On	4	36T - ID: 6.370"
N I	201709-175	24232654	Low/Reverse Clutch	.069	07-On	5	24T - ID: 6.210"

TORQUE CONVERTER-FRICTION RINGS AND CLUTCHES

ILL	ALTO No.	REF No.	Description	Spec	Year	Qty	Notes
N I	201714	NA	FR Torque Converter (internal spline)	.138/3.51	07-On	1	OTHER - 24T - OD: 8.700"

FILTERS

ILL	ALTO No.	REF No.	Description	Spec	Year	Qty	Notes
N I	201940	24117-593-565	Filter-6L45E- BMW X3, 3000CC		07-On	1	
		24117-581-604					
N I	195940	24236933	Filter-6L50E-Cadillac		07-On	1	
		24236517					

MOLDED PISTONS

ILL	ALTO No.	REF No.	Description	Spec	Year	Qty	Notes
N I	201670	NA	Piston Kit		07-On	1	Contains 5 Pistons

GENERAL MOTORS

6L80E, 6L90E

2006-On

KITS

*Add Suffix SK for Super Kit

ILL	Description	Years	Friction Module	Steel Module	Overhaul Kit	Banner Kit	Master Kit
KT	Rebuilding Kit - 6L80E with Molded Pistons	06-On	195752A	195753A	195804	195901LS	195901
KT	Rebuilding Kit - 6L80E without Molded Pistons	06-On	195752A	195753A	195804X	195901XLS	195901X
KT	Rebuilding Kit - 6L90E RWD with Molded Pistons	07-On	195752B	195753B	195804	195903LS	195903
KT	Rebuilding Kit - 6L90E RWD without Molded Pistons	07-On	195752B	195753B	195804X	195903XLS	195903X

KITS - HI-PERFORMANCE with PowerPack®

ILL	Description	Years	Friction and Steel Module	Overhaul Kit	Banner Kit	Master Kit
KT	Rebuilding Kit - 6L80E, 6L90E with 3-5- Rev,4-5-6 & 2-6 CI PowerPack® (without Molded Pistons)	06-On	195750HPPWR	195804X	NA	195901XHPPWR

FRICTION CLUTCHES

ILL	ALTO No.	REF No.	Description	Spec	Year	Qty	Notes
N I	195700-170	24224147	1-2-3-4 Clutch	.067	06-On	6-7	HEG - 36T - OD: 7.228" - PLNI
N I	195702-180	24224148	3-5 Reverse Clutch	.071	06-On	5-6	HEG - 36T - OD: 7.647" - PLNI
N I	195704-160	24224158	4-5-6 Clutch	.063	06-On	7-8	HEG - 36T - OD: 5.098" - PLNI
N I	195706-183	24240221	2-6 Clutch	.072	06-On	6-7	HEG - 36T - OD: 7.879" - SPRL
N I	195708-163	24235460	Low/Reverse Clutch	.064	06-On	6-7	HEG - 54T - OD: 6.993" - SPRL

FRICTION CLUTCHES - HI-PERFORMANCE

ILL	ALTO No.	REF No.	Description	Spec	Year	Qty	Notes
N I	195740-170	NA	1-2-3-4 Clutch	.067	06-On	6	Red - 36T - OD: 7.228" - PLNI
N I	195742A183	NA	3-5 Reverse Clutch (1 sided) - internal spline	.072	06-On	7	Red - 36T - OD: 7.647" - PLNI
N I	195743A183	NA	3-5 Reverse Clutch (1 sided) - external spline	.072	06-On	7	Red - 36T - ID: 6.733" - PLNI
N I	195702A170	NA	3-5 Reverse Clutch	.067	06-On	6	G3BK - 36T - ID: 7.649" - PLNI
N I	195704A160	NA	4-5-6 Clutch	.063	06-On	8	G3BK - 36T - OD: 5.101"
N I	195744A163	NA	4-5-6 Clutch (1 sided) - internal spline	.064	06-On	9	Red - 36T - OD: 5.098" - PLNI
N I	195745A163	NA	4-5-6 Clutch (1 sided) - external spline	.064	06-On	9	Red - 36T - ID: 4.252" - PLNI
N I	195746A173	NA	2-6 Clutch (1 sided) - internal spline	.068	06-On	7	Red - 36T - OD: 7.879" - SB
N I	195707A173	NA	2-6 Clutch (1 sided) - external spline	.068	06-On	7	Red - 36T - ID: 6.672" - SB
N I	195748-163	NA	Low/Reverse Clutch	.064	06-On	6	Red - 54T - OD: 6.993" - PLNI

STEEL CLUTCHES

ILL	ALTO No.	REF No.	Description	Spec	Year	Qty	Notes
N I	195701-170	24232499	1-2-3-4 Clutch	.067	06-On	6-7	9T - ID: 6.357"
N I	195703-275	24232498	3-5 Reverse Clutch	.108	06-On	5-6	36T - ID: 6.733"
N I	195705-225	24224648	4-5-6 Clutch	.088	06-On	7-8	36T - ID: 4.252"
N I	195707-220	24232497	2-6 Clutch	.087	06-On	6-7	36T - ID: 6.674"
N I	195709-173	24232496	Low/Reverse Clutch	.068	06-On	6-7	36T - ID: 6.009"

STEEL CLUTCHES - HI-PERFORMANCE - Kolene®

ILL	ALTO No.	REF No.	Description	Spec	Year	Qty	Notes
N I	195705K225	NA	4-5-6 Clutch	.088	06-On	8	Kol - 36T - ID: 4.252"
N I	195703AK170	NA	3-5 Reverse Clutch	.088	06-On	6	Kol - 36T - ID: 4.252"
N I	195703AK200	NA	3-5 Reverse Clutch Anti-Drag	.079	06-On	1	Kol - 36T - ID: 6.732"
N I	195701K170	NA	1-2-3-4 Clutch	.067	06-On	6	Kol - 9T - ID: 6.357"
N I	195709K173	NA	Low/Reverse Clutch	.068	06-On	6	Kol - 36T - ID: 6.009"

PRESSURE PLATES

ILL	ALTO No.	REF No.	Description	Spec	Year	Qty	Notes
N I	195763	NA	3-5 Reverse Clutch		06-On	1	

GENERAL MOTORS

6L80E, 6L90E

2006-On

OEI® Original Equipment Improvements

ILL	ALTO No.	REF No.	Description	Spec	Year	Qty	Notes
N I	195757	NA	3-5 Reverse Clutch PowerPack® Hi-Performance		06-On	1	Red Eagle®
N I	195757B	NA	3-5 Reverse Clutch PowerPack® (2 sided)		06-On	1	G3
N I	195756	NA	4-5-6 Clutch PowerPack® Hi-Performance		06-On	1	Red Eagle®
N I	195758	NA	2-6 Clutch PowerPack® Hi-Performance - 6L80E		06-On	1	Red Eagle®
N I	195758A	NA	2-6 Clutch PowerPack® Hi-Performance - 6L90E		06-On	1	Red Eagle®

FILTERS

ILL	ALTO No.	REF No.	Description	Spec	Year	Qty	Notes
N I	195940	24236933	Filter		06-On	1	
		24236932					
N I	195940A	24236517	Filter, Commodore		06-On	1	
		24236932					
		24251054					
		24252158					

PISTONS

ILL	ALTO No.	REF No.	Description	Spec	Year	Qty	Notes
N I	195670	NA	Piston Kit		06-On	1	Contains 5 Pistons
N I	195300	24224708	1-2-3-4 Clutch Balance		06-On	1	
N I	195301	24232417	4-5-6 Clutch Balance		06-On	1	
N I	195302	24232416	4-5-6 Clutch Apply		06-On	1	
N I	195303	24224169	2-6 Clutch		06-On	1	
N I	195304	24224172	Low/Reverse Clutch		06-On	1	

HARD PARTS

ILL	ALTO No.	REF No.	Description	Spec	Year	Qty	Notes
N I	195350	24253983	6L90 Rear Planetary Carrier Assy.		06-On	1	

GENERAL MOTORS

8L90E

2014-On

KITS

ILL	Description	Years	Friction Module	Steel Module	Overhaul Kit	Banner Kit	Master Kit
KT	Rebuilding Kit with Pistons	14-On	224752	224753	224800	224901LS	224901
KT	Rebuling Kit without Pistons	14-On	224752	224753	224800X	224901XLS	224901X

FRICTION CLUTCHES

ILL	ALTO No.	REF No.	Description	Spec	Year	Qty	Notes
NI	224700-145	NA	1-2-7-8 Reverse Clutch C1	.057	14-On	4	Other - 35T - OD: 7.640""
NI	224702-205	NA	1-2-3-4-5 Reverse Clutch C2	.081	14-On	3	Other - 48T - OD: 7.324"
NI	224704-185	NA	1-3-5-6-7 Clutch C3	.073	14-On	5	Other - 42T - OD: 7.532"
NI	224706-165	NA	4-5-6-7-8 Reverse Clutch C5	.065	14-On	4	Other - 21T - OD: 6.290"
NI	224708-165	NA	2-3-4-6-8 Clutch C4	.065	14-On	5	Other - 23T - OD: 6.822"
NI	224714	NA	Torque Converter	.148	14-On	1	Other - 30T - ID: 8.506"

STEEL CLUTCHES

ILL	ALTO No.	REF No.	Description	Spec	Year	Qty	Notes
NI	224701-195	NA	1-2-7-8 Reverse Clutch C1	.077	14-On	3	28T - ID: 6.568"
NI	224701A300	NA	1-2-7-8 Reverse Clutch C1	.117	14-On	1	15T - ID: 6.568"
NI	224701B	NA	1-2-7-8 Reverse Clutch C1	.083	14-On	1	ID: 6.700"
NI	224703-195	NA	1-2-3-4-5 Reverse Clutch C2	.077	14-On	2	27T - ID: 6.334"
NI	224703A380	NA	1-2-3-4-5 Reverse Clutch C2	.149	14-On	1	15T - ID: 6.334"
NI	224703B	NA	1-2-3-4-5 Reverse Clutch C2	.106	14-On	1	ID: 6.295"
NI	224705-280	NA	1-3-5-6-7 Clutch C3	.111	14-On	5	36T - ID: 6.292"
NI	224707-245	NA	4-5-6-7-8 Reverse Clutch C5	.096	14-On	4	8T - ID: 5.070"
NI	224707B	NA	4-5-6-7-8 Reverse Clutch C5	.060	14-On	1	8T - ID: 5.120"
NI	224709-240	NA	2-3-4-6-8 Clutch C4	.095	14-On	4	26T - ID: 5.542"
NI	224709-485	NA	2-3-4-6-8 Clutch C4	.190	14-On	1	26T - ID: 5.542"
NI	224709B	NA	2-3-4-6-8 Clutch C4	.114	14-On	1	12T - ID: 5.538"

PRESSURE PLATES

ILL	ALTO No.	REF No.	Description	Spec	Year	Qty	Notes
NI	224760	NA	1-2-7-8 Clutch C1	.214	14-On	1	
NI	224761	NA	1-2-3-4-5 Reverse Clutch C2	.490	14-On	1	
NI	224762	NA	1-3-5-6-7 Clutch C3	.437	14-On	1	
NI	224763	NA	4-5-6-7-8 Reverse Clutch C5	.489	14-On	1	
NI	224764	NA	2-3-4-6-8 Clutch C4	.337	14-On	1	

FILTERS

ILL	ALTO No.	REF No.	Description	Spec	Year	Qty	Notes
NI	224940	NA	Filter - also fits 8L45		14-On	1	

PISTONS

ILL	ALTO No.	REF No.	Description	Spec	Year	Qty	Notes
NI	224670	NA	Piston Kit		14-On	1	

GENERAL MOTORS

4T60 TH440-T4 1983-93
4T60E 1992-99, 4T65E 1997-On

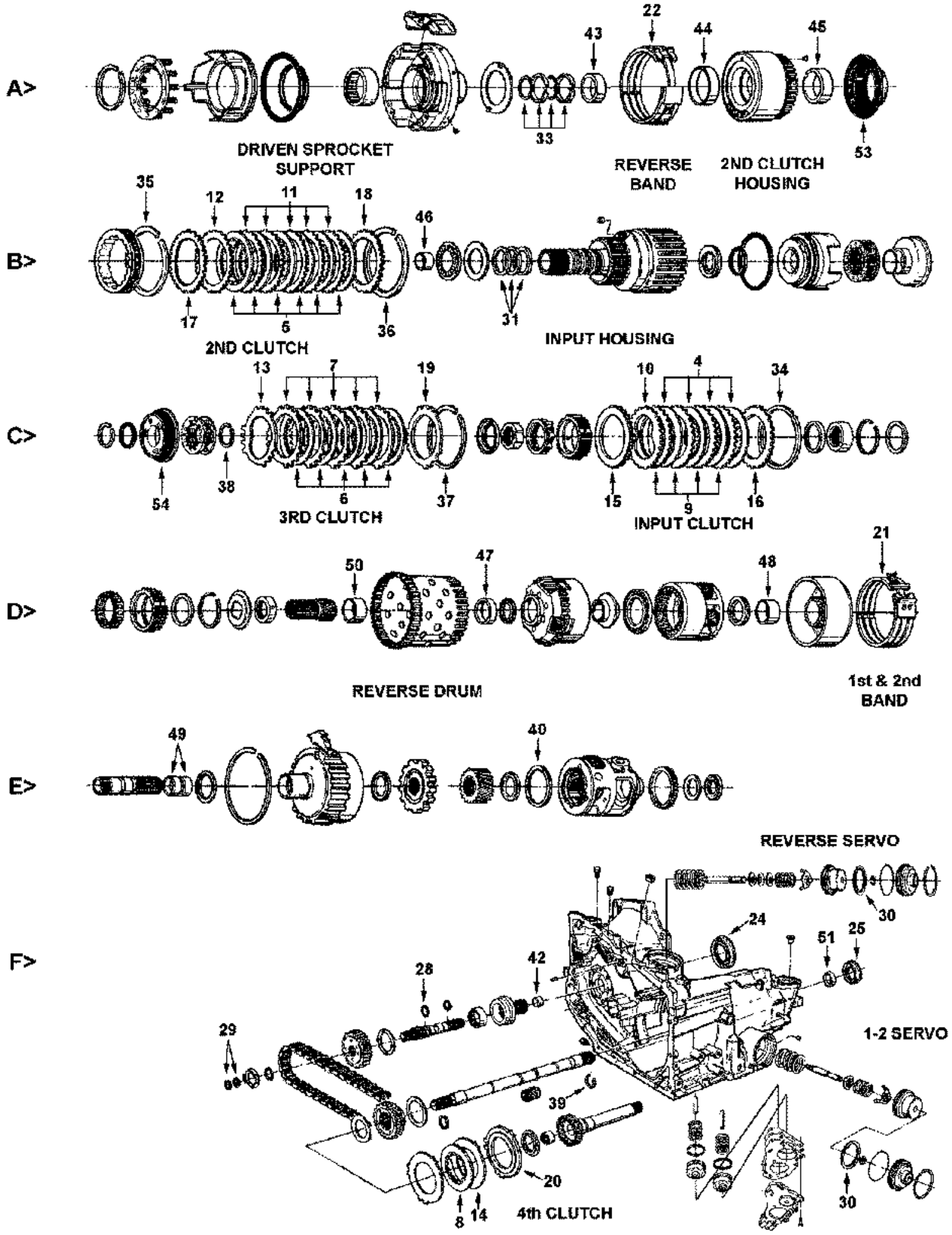

GENERAL MOTORS

4T60 TH440-T4 1983-93
4T60E 1992-99, 4T65E 1997-On

KITS

*Add Suffix SK for Super Kit

ILL	Description	Years	Friction Module	Steel Module	Overhaul Kit	Banner Kit	Master Kit
KT	Rebuilding Kit - 4T60	83-86	062752E	062753E	062800	062901LS	062901
KT	Rebuilding Kit - 4T60	87-88	062752C	062753A	062800	062905LS	062905
KT	Rebuilding Kit - 4T60	89-90	062752A	062753A	062800	062905ALS	062905A
KT	Rebuilding Kit - 4T60	91-93	062752A	062753D	062800	062905ALS	062905B
KT	Rebuilding Kit - 4T60 (combo)	89-93	062752A	062753X	062800	062905ALS	062905AX
KT	Rebuilding Kit - 4T60E	91-92	062752B	062753B	062804	062907LS	062907
KT	Rebuilding Kit - 4T60E	93-8/94	062752B	062753G	062804	062907LS	062907B
KT	Rebuilding Kit - 4T60E	8/94-99	062752F	062753C	062804	062907ALS	062907A
KT	Rebuilding Kit - 4T60E (combo)	91-99	062752H	062753H	062804	062907XLS	062907X
KT	Rebuilding Kit - 4T65E	97-00	062752L	062753K	062810	062909LS	062909
KT	Rebuilding Kit - 4T65E	01-02	062752K	062753K	062810	062909ALS	062909A
KT	Rebuilding Kit - 4T65E without manual Shift	03-On	062752N	062753N	062810	062909BLS	062909B
KT	Rebuilding Kit - 4T65E with Manual Shift	04-On	062752P	062753P	062810	062909CLS	062909C
KT	Rebuilding Kit - 4T65E Volvo Only	99-03	062752M	062753M	062810	062911LS	062911
KT	Rebuilding Kit - 4T65E Volvo Only	03-On	062752Q	062753M	062810	062913LS	062913

KITS - Specialty Kit - with PowerPack®

ILL	Description	Years	Friction and Steel Module	Overhaul Kit	Banner Kit	Master Kit
KT	Rebuilding Kit - 4T60 with 2nd Clutch PowerPack®	83-93	062750	062800	NA	062903

MISCELLANEOUS GASKETS & KIT COMPONENTS

ILL	ALTO No.	REF No.	Description	Spec	Year	Qty	Notes
1G	062816	8656396	Gasket, Oil Pan - TH440/4T60	Cork/Rub	83-93	1	
1G	062816-OE	8678681	Gasket, Oil Pan - TH440/4T60	M.Rubber	90-93	1	
1G	062816A	NA	Gasket, Oil Pan - 4T60E/4T65E	Cork/Rub	91-On	1	
1G	062816A-OE	8676250	Gasket, Oil Pan - 4T60E/4T65E	M.Rubber	91-On	1	
2G	062818	8656397	Gasket, Side Cover - TH440/4T60/4T60E	Cork/Rub	83-On	1	
2G	062818-OE	8683803	Gasket, Side Cover - 4T60E	M.Rubber	94-99	1	Aluminum Side cover
2G	062817	24206959	Gasket, Side Cover - 4T65E	M.Rubber	97-On	1	
3G	062818A	8656398	Gasket, Side Cover (inner) - all except below	Cork/Rub	83-On	1	Steel Side cover
3G	062818A-OE	24200061	Gasket, Side Cover (inner) - 4T60E/4T65E	M.Rubber	94-On	1	Aluminum Side cover

FRICTION CLUTCHES

ILL	ALTO No.	REF No.	Description	Spec	Year	Qty	Notes
4C	062700	8662850	Forward Input	.090	83-8/94	4	Tan - 32T - OD: 4.643" - PL
4C	062700-165	24202333	Forward Input	.065	8/94-02	4	Tan - 32T - OD: 4.643" - SB
4C	062700A165	24216502	Forward Input	.065	03-On	4	Tan - 30T - OD: 4.643" - SB
5B	062702	8685539	2nd Clutch - 4T60, 4T60E	.070	83-93	5-6	HEG - 38T - OD: 5.122" - SM
5B	062702B177	8658539	2nd Clutch - 4T60E	.070	94-On	5-6	Tan - 38T - OD: 5.122" - PLNI
5B	062702A	NA	2nd Clutch - PowerPack® Component	.060	83-On	AR	HEG - 38T - OD: 5.122" - SM
5B	062722	24205361	2nd Clutch - 4T65E	.070	97-On	6	HEG - 42T - OD: 5.453" - SM
6C	062704	8662911	3rd Clutch	.089	83-86	4	HEG - 32T - OD: 4.409" - SM
6C	062714B210	8658042	3rd Clutch (1 sided) - internal spline 4T60,4T60E	.083	86-88	4	HEG - 32T - OD: 4.409" - SM
6C	062724	8668361	3rd Clutch (1 sided) - internal spline 4T60E	.079	89-On	5	HEG - 32T - OD: 4.409" - SM
6C	062724	8668361	3rd Clutch (1 sided) - internal spline 4T65E	.079	97-00	5	HEG - 32T - OD: 4.409" - SM
6C	062714B210	24216287	3rd Clutch (1 sided) - internal spline 4T65E	.083	01-On	5	HEG - 32T - OD: 4.409" - SM
6C	062724	8668361	3rd Clutch (1 sided) - internal spline	.079	89-On	5	HEG - 32T - OD: 4.409" - SM
7B	062715	8658043	3rd Clutch (1 sided) - external spline	.083	86-88	4	HEG - 12T - ID:3.373" - SM
7B	062725	8668362	3rd Clutch (1 sided) - external spline 4T60E	.079	89-On	5	HEG - 12T - ID:3.373" - SM
7B	062725	8668362	3rd Clutch (1 sided) - external spline 4T65E	.079	97-On	5	HEG - 12T - ID:3.373" - SM

GENERAL MOTORS

4T60 TH440-T4 1983-93
4T60E 1992-99, 4T65E 1997-On

FRICTION CLUTCHES

ILL	ALTO No.	REF No.	Description	Spec	Year	Qty	Notes
		24216288					
8F	062706	8649873	4th Clutch	.080	83-84	1	HEG - 18T - OD: 5.312" - SM
8F	062726	8662172	4th Clutch - 4T60	.090	84-93	1	HEG - 18T - OD: 5.312" - SM
8F	062716	8685066	4th Clutch - 4T60E	.070	91-98	2	HEG - 18T - OD: 5.312" - SM
8F	062708	24218248	4th Clutch - 4T60E (99-On) / 4T65E	.069	97-99	2	HEG - 32T - OD: 5.312" - SB
8F	062708A155	24224889	4th Clutch (1 sided) - internal spline 4T65E	.060	99-On	2	HEG - 32T - OD: 5.312" - SB
14F	062709A155	NA	4th Clutch (1 sided) - external spline 4T65E	.060	99-On	2	HEG - 3T - ID: 3.513" - SB
8F	062736	NA	4th Clutch - (Bent Tooth)	.090	83-93	1	PowerPack® Component
8F	062736A	NA	4th Clutch - (Bent Tooth) 4T60E/F7	.070	91-98	2	PowerPack® Component

FRICTION CLUTCHES - HI-PERFORMANCE - Red Eagle®

ILL	ALTO No.	REF No.	Description	Spec	Year	Qty	Notes
4C	062740-165	NA	Forward Input	.065	8/94-On	4	Red - 32T - OD: 4.643" - SB
5B	062742A	NA	2nd Clutch - 4T60, 4T60E	.060	83-On	6-7	Red - 38T - OD: 5.122" - SM
7C	062744D	NA	3rd Clutch (1 sided) - external spline	.079	89-On	5	HEG - 12T - ID:3.373" - SM
8F	062746A	NA	4th Clutch - 4T60	.090	84-93	1	Red - 18T - OD: 5.312" - SM
			Bent tooth Friction to reuse 4th Clutch hub - NOT AVAILABLE SEPARATELY (Patent No. 496789)				
8F	062746X	NA	4th Clutch - (Bent Tooth) Powerpack® Component	.090	83-93	1	Red - 18T - OD: 5.311" - SM
8F	062746XA	NA	4th Clutch - (Bent Tooth) 4T60E/F7 Powerpack® Component	.070	91-98	2	Red - 18T - OD: 5.311" - SM

STEEL CLUTCHES

ILL	ALTO No.	REF No.	Description	Spec	Year	Qty	Notes
9C	048701	8683084	Forward Input - 4T60	.076	83-E90	3	26T - ID: 3.517"
9C	062711	8651446	Forward Input - 4T60	.050	90-93	4	26T - ID: 3.517"
9C	062711	8651446	Forward Input - 4T60E / 4T65E	.050	91-8/94	4	26T - ID: 3.517"
9C	048701	8683084	Forward Input - 4T60E / 4T65E	.076	8/94-On	4	26T - ID: 3.517"
10C	048707	8675257	Forward Input - wave	.050	90-On	1	26T - ID: 3.517"
11B	062703K	8662309	2nd Clutch - 4T60 KOLENE®	.090	83-86	5	36T - ID: 3.790"
11B	062713K	8662006	2nd Clutch - 4T60/4T60E KOLENE®	.077	87-99	6	34T - ID: 3.790"
11B	062733	24204104	2nd Clutch - 4T65E	.068	97-On	5	36T - ID: 3.880"
11B	062733-228	NA	2nd Clutch - 4T65E selective	.090	97-On	AR	36T - ID: 3.880"
11B	062703A	NA	2nd Clutch - PowerPack® Component	.067	83-On	AR	36T - ID: 3.790"
11B	062703AK	NA	2nd Clutch - Kolene® PowerPack® Comp.	.067	83-On	AR	36T - ID: 3.790"
12B	062723	8658463	2nd Clutch - wave	.044	83-96	1	36T - ID: 3.790"
12B	062768	24202950	2nd Clutch - wave	.065	97-On	1	36T - ID: 4.460"
7C	062705	8656313	3rd Clutch	.090	83-85	4	12T - ID: 3.371"
13C	062705	8656313	3rd Clutch	.090	83-91	1	12T - ID: 3.371"
13C	062767	8656645	3rd Clutch - wave	.030	92-97	1	12T - ID: 3.371"
13C	062766	24208918	3rd Clutch - wave		98-On	1	
14F	062707	8656767	4th Clutch	.077	83-96	1-2	5T- ID: 3.471"
14F	062717	8661006	4th Clutch	.074	90-93	1-2	5T- ID: 3.471"
14F	062727	8680771	4th Clutch	.133	94-On	1	5T- ID: 3.471"
14F	062709	24208013	4th Clutch - 4T60E	.083	97-99	2	3T - ID: 3.513"
14F	062709	24208013	4th Clutch - 4T65E	.083	97-05	2	3T - ID: 3.513"
14F	062709B215	24224888	4th Clutch - 4T65E	.084	04-On	2	3T - ID: 3.513"
14F	062709D211	24224892	4th Clutch - 4T65E top plate	.083	06-On	1	5T - ID: 3.502"
14F	062707A	NA	4th Clutch - PowerPack® Component	.077	83-93	1-2	Not Sold Separate
14F	062717A	NA	4th Clutch - PowerPack® Component	.074	87-93	2	Not Sold Separate
14F	062727A	NA	4th Clutch - PowerPack® Component	.133	93-On	2	Not Sold Separate

GENERAL MOTORS

4T60 TH440-T4 1983-93
4T60E 1992-99, 4T65E 1997-On

PRESSURE PLATES

ILL	ALTO No.	REF No.	Description	Spec	Year	Qty	Notes
15C	TBA	8682801	Forward Input - Apply		83-On	1	
17B	TBA	8680367	2nd Clutch - Apply	.135	91-99	1	
17B	TBA	24204103	2nd Clutch - Apply		97-On	1	Tapered
18B	062761B	8668566	2nd Clutch - Backing	.390	83-On	1	
18B	TBA	24204105	2nd Clutch - Backing		97-On	1	
19C	062762-382	8658083	3rd Clutch - Backing	.150	83-On	1	
20F	TBA	8649831	4th clutch - Apply	.205	83-89	1	with step
20F	TBA	8661004	4th Clutch - Apply	.160	90-92	1	
20F	062765	24208014	4th Clutch - Apply	.128	97-On	1	
20F	062765A	24224893	4th Clutch - Apply	.118	04-On	1	

OEI® Original Equipment Improvements

ILL	ALTO No.	REF No.	Description	Spec	Year	Qty	Notes
KT	062756	NA	2nd Clutch PowerPack® - 4T60/ 4T60E	Tan	83-On	1	Increased Clutch capacity
KT	062756HP	NA	2nd Clutch PowerPack® Hi-Performance - 4T60/4T60E	Red	83-On	1	Red Eagle®
KT	062758	NA	4th Clutch PowerPack® - 4T60	Tan	83-93	1	Bent Tooth Friction
KT	062758HP	NA	4th Clutch PowerPack® - 4T60	Red	83-93	1	Bent Tooth Frict - Red Eagle®
KT	062758A	NA	4th Clutch PowerPack® - 4T60E, F7	Tan	87-93	1	Bent Tooth Friction
KT	062758AHP	NA	4th Clutch PowerPack® - 4T60E, F7 Hi-Performance	Red	87-93	1	Bent Tooth Frict - Red Eagle®
KT	062758B	NA	4th Clutch PowerPack® - 4T60E	Tan	92-98	1	Bent Tooth Friction
KT	062758BHP	NA	4th Clutch PowerPack® - 4T60E Hi-Performance	Red	92-98	1	Bent Tooth Frict - Red Eagle®
KT	062759	NA	Clearance Pack - 2nd, 3rd & Forward		92-98	1	
KT	062985	SK® 440-3	Shift Kit® Tri-Pack (Fixes 3 trans.) - 4T60	Transgo®	83-93	1	2nd Clutch
KT	062986	SK® 440-JR	Shift Kit® Junior - 4T60	Transgo®	83-93	1	3rd Clutch
KT	062987	SK® 4T65E	Shift Kit® - 4T65E including Volvo	Transgo®	97-08	1	Prevents hard and long shifts

BANDS

ILL	ALTO No.	REF No.	Description	Spec	Year	Qty	Notes
21D	062950	8675987	1-2 (Rear) Band - 4T60	Tan	83-93	1	
21D	062951A	24213361	Forward (Rear) Band - 4T65E	HEG	01-On	1	
21D	062952	8685155	Man 2-1 Band - 4T60E, 4T65E	Tan	91-On	1	
22A	062955	8675986	Reverse (Front) Band - 4T60	Tan	83-93	1	
22A	062956	24202815	Reverse (Front) Band - 4T60E, 4T65E	Tan	91-On	1	

BANDS - HI-PERFORMANCE - Red Eagle®

ILL	ALTO No.	REF No.	Description	Spec	Year	Qty	Notes
21D	062960	NA	1-2 (Rear) Band - 4T60	Red	83-93	1	Red Eagle®

FILTERS

ILL	ALTO No.	REF No.	Description	Spec	Year	Qty	Notes
23G	062940	8682471	Filter - 4T60, F7		83-93	1	
23G	062942	24205416	Filter - 4T60E, 4T65E		91-On	1	

METAL CLAD SEALS

ILL	ALTO No.	REF No.	Description	Spec	Year	Qty	Notes
24F	048400	24204772	Converter Housing		83-On	1	
25F	048401	24202835	Right Axle		83-On	1	
26G	062402	8679744	Left Axle - 4T60, 4T60E		83-99	1	
26G	062403	24204330	Left Axle - 4T65E		97-On	1	
N I	048402A	8644709	Manual Lever		83-On	1	

GENERAL MOTORS

4T60 TH440-T4 1983-93
4T60E 1992-99, 4T65E 1997-On

METAL CLAD SEALS

SEALING RINGS

ILL	ALTO No.	REF No.	Description	Spec	Year	Qty	Notes
KT	062600	C358	Sealing Ring Kit, 4T60 - 2M/10T		83-86	1	
KT	062600A	C359	Sealing Ring Kit, 4T60 - 2M/10T		87-On	1	with Quad seals & Rings
KT	062601	C361E	Sealing RIng Kit, 4T60E, 4T65E - 2P/2Q/7T		91-On	1	with Quad seals & Rings
27G	048102	8631211	Turbine Shaft (Oil pump shaft)	Teflon	83-On	1	
28F	048111	8637170	Turbine Shaft to Support - middle	Teflon	83-On	1	
29F	048110	8643058	Turbine Shaft to support - end (solid)	Teflon	83-On	2	
30F	062100	8658160	1-2 & Reverse Band Servo piston	Teflon	83-93	2	
31B	062101	8656342	Input Shaft	Teflon	83-On	3	
32G	048107	8632588	Governor	Teflon	83-93	1	
33A	062104	8658098	Center Support	Metal	83-86	2	
33A	062104A	8662330	Center Support (with Tabs)	Peak®	87-On	2	Vespel®
33A	062114	8662329	Center Support expander	Rubber	87-On	2	Quad Seal

BUSHINGS

ILL	ALTO No.	REF No.	Description	Spec	Year	Qty	Notes
KT	062625	NA	Bushing Kit - 4T60		83-93	1	
KT	062625A	NA	Bushing Kit - 4T60E		91-95	1	
KT	062625B	NA	Bushing Kit - 4T60E, 4T65E		96-On	1	
41G	048200A	8637905	Converter Hub - All		83-On	1	
42F	043201	8628915	Drive Sprocket support		83-On	1	
43A	062200	8649702	Driven Sprocket Support (Input & 3rd Clutch)		83-On	1	
44A	062206	8644098	2nd Clutch Housing - Front		83-On	1	
45A	062207	8644099	2nd Clutch Housing - Rear		83-On	1	
46B	062201	8649661	Input Shaft		83-On	1	
47D	062203	8658803	Internal Reaction gear (Input Carrier)		83-On	1	
48D	062204	8644203	Reaction Sun gear, Front - 4T60		83-93	1	
48D	062204A	8651447	Reaction Sun gear, Front - 4T60E, 4T65E		91-On	1	
N I	062213	8651448	Reaction Sun gear, Rear - 4T60E, 4T65E		91-On	1	
49E	062205	8649537	Final Drive Internal gear		83-On	2	
50D	062202	8644518	Input Sun Gear		83-On	1	
N I	062214	5606004	Forward Drum (1-2 Support) - Narrow		91-95	1	
N I	062214A	NA	Forward Drum (1-2 Support) - Wide		96-On	1	
51F	048202	8631119	Case		83-On	1	
N I	062215	24204478	Front Wheel Shaft - 4T65E		97-On	1	

WASHERS

ILL	ALTO No.	REF No.	Description	Spec	Year	Qty	Notes
KT	062635	NA	Washer Kit - 4T60, 4T60E		83-99	1	w/o selectives
KT	062635A	NA	Washer Kit - 4T65E		97-On	1	w/o selectives

MODULATORS

ILL	ALTO No.	REF No.	Description	Spec	Year	Qty	Notes
52G	062500	7866	Modulator, Dual Red Stripe		83-86	1	
52G	062501	7865	Modulator, Dual Black Stripe		87-99	1	

ELECTRONIC CONTROL COMPONENTS

ILL	ALTO No.	REF No.	Description	Spec	Year	Qty	Notes
N I	062507	8583535	Solenoid TCC/PWM 4T60E		91-99	1	

GENERAL MOTORS

4T60 TH440-T4 1983-93
4T60E 1992-99, 4T65E 1997-On

ELECTRONIC CONTROL COMPONENTS

ILL	ALTO No.	REF No.	Description	Spec	Year	Qty	Notes
N I	062504	24212690	Solenoid TCC/PWM 4T65E (BW)		97-On	1	
N I	114501	96041868	Solenoid EPC 4T65E (BW)		97-02	1	
N I		10478146					
N I	114501A	24225825	Solenoid EPC 4T65E		03-On	1	

PISTONS

ILL	ALTO No.	REF No.	Description	Spec	Year	Qty	Notes
KT	062671	NA	Piston Kit		97-On	1	contains 2 pistons
53A	062330	8676387	Bonded Piston, 2nd Clutch - 4T60, 4T60E		91-99	1	
53A	062330A	24208336	Bonded Piston, 2nd Clutch - 4T65E		97-On	1	
54C	062331	8668453	Bonded Piston, 3rd Clutch - 4T60, 4T60E		91-99	1	
54C	062331A	24205378	Bonded Piston, 3rd Clutch - 4T65E		97-On	1	

HARD PARTS

ILL	ALTO No.	REF No.	Description	Spec	Year	Qty	Notes
N I	062376	24206434	Drive Chain - 4T65E		97-On	1	
N I	062650X	NA	Differential Conversion Kit with 2 bearings 4T65E - GM to Volvo		97-On	1	Incl. 55.63mm OD & 59.69mm OD Bearings

GENERAL MOTORS

4L60 TH700-R4 1982-92, 4L60E 1992-On
4L65E 2001-On, 4L70E 06-On

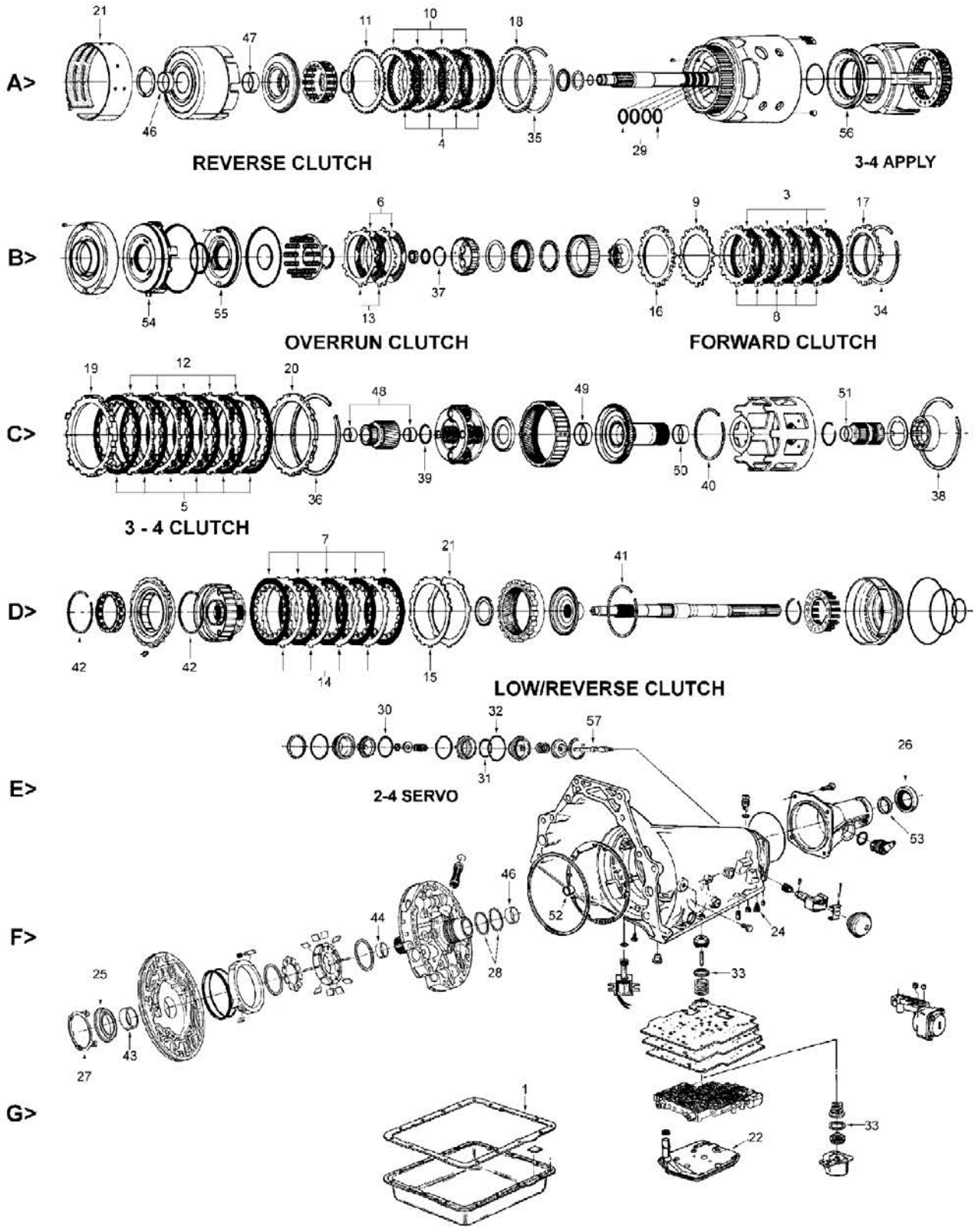

GENERAL MOTORS

4L60 TH700-R4 1982-92, 4L60E 1992-On
4L65E 2001-On, 4L70E 06-On

KITS

*Add Suffix SK for Super Kit

ILL	Description	Years	Friction Module	Steel Module	Overhaul Kit	Banner Kit	Master Kit
KT	Rebuilding Kit - 4L60	82-84	057752E	057753E	057800	057901LS	057901
KT	Rebuilding Kit - 4L60 with Heg Frictions	82-84	057752L	057753E	057800	057901HEGLS	057901HEG
KT	Rebuilding Kit - 4L60	85-E87	057752	057753	057800	057901ALS	057901A
KT	Rebuilding Kit - 4L60	1987	057752J	057753A	057802	NA	057907
KT	Rebuilding Kit - 4L60	87-92	057752G	057753A	057802	057901BLS	057901B
KT	Rebuilding Kit - 4L60 (combo- 4VB Gsk)	85-92	057752J	057753A	057800X	NA	057901X
KT	Rebuilding Kit - 4L60 (combo- 4VB Gsk) with Heg Fr	85-92	057752J	057753A	057800X	TBA	TBA
KT	Rebuilding Kit - 4L60E	92-1/93	057752G	057753A	057804	057905LS	057905
KT	Rebuilding Kit - 4L60E	2/93-96	057752G	057753B	057804	057905LS	057905A
KT	Rebuilding Kit - 4L60E with HEG Frictions and Red Eagle® One-sided 3/4 PowerPack®	85-On	057752GA	NA	057804	NA	NA
KT	Rebuilding Kit - 4L60E with HEG Frictions,Turbulator Steels and Molded Pistons (3)	97-00	057752G	057753G	057806	057905DLS	057905D
KT	Rebuilding Kit - 4L60E, 4L65E with HEG Frictions (Heavy Duty) and Molded Pistons (3)	01-03	057752D	057753D	057806	057905ELS	057905E
KT	Rebuilding Kit - 4L60E, 4L70E with HEG Frictions, Turbulator Steels and Molded Pistons (3)	04-On	057752D	057753D	057806A	057909LS	057909
KT	Rebuilding Kit - 4L60E, 4L70E with HEG Frictions and Turbulator Steels	04-On	057752D	057753D	057806AX	057909XLS	057909X

KITS - Specialty Kit - with PowerPack®

ILL	Description	Years	Friction and Steel Module	Friction Module	Steel Module	Overhaul Kit	Banner Kit	Master Kit
KT	Rebuilding Kit - 4L60 with 3/4 PowerPack®	85-87	057750PWR	NA	NA	057800	NA	057901APWR
KT	Rebuilding Kit - 4L60 with 3/4 Powerpack® and Powerband®	85-87	057750PWR	NA	NA	057800	NA	057901APWR-4
KT	Rebuilding Kit - 4L60 with 3/4 PowerPack®	87-92	057750APWR	NA	NA	057802	NA	057901BPWR
KT	Rebuilding Kit - 4L60 with 3/4 PowerPack® and PowerBand®	87-92	057750APWR	NA	NA	057802	NA	057901BPWR-4
KT	Rebuilding Kit - 4L60E with 3/4 PowerPack®	92-On	057750APWR	NA	NA	057804	NA	057905PWR
KT	Rebuilding Kit - 4L60E with 3/4 PowerPack® and PowerBand®	92-On	057750APWR	NA	NA	057804	NA	057905PWR-4
KT	Rebuilding Kit - 4L60E with 3/4 PowerPack®	87-On	057750GX	NA	NA	NA	NA	NA

KITS - HI-PERFORMANCE Red Eagle®

ILL	Description	Years	Friction and Steel Module	Friction Module	Steel Module	Overhaul Kit	Banner Kit	Master Kit
KT	Rebuilding Kit - 4L60	82-84	057750EHP	NA	NA	057800	NA	057901HP
KT	Rebuilding Kit - 4L60	85-E87	057750HP	NA	NA	057800	NA	057901AHP
KT	Rebuilding Kit - TH700-R4, 4L60E	85-On	NA	057752X	057753X	NA	NA	NA

KITS - HI-PERFORMANCE with PowerPack®

ILL	Description	Years	Friction and Steel Module	Friction Module	Steel Module	Overhaul Kit	Banner Kit	Master Kit
KT	Rebuilding Kit - 4L60 with 3/4 PowerPack®	87-92	057750AHPPWR	NA	NA	057802	NA	057901BHPPWR
KT	Rebuilding Kit - 4L60 with 3/4 PowerPack® and PowerBand®	87-92	057750AHPPWR	NA	NA	057802	NA	57901BHPPWR-4
KT	Rebuilding Kit - 4L60E with 3/4 PowerPack®	92-On	057750AHPPWR	NA	NA	057804 *	NA	057905HPPWR
KT	Rebuilding Kit - 4L60E with 3/4 PowerPack® and PowerBand®	92-On	057750AHPPWR	NA	NA	057804 *	NA	57905HPPWR-4
KT	Rebuilding Kit - 4L60E with 3/4 PowerPack®	87-On	057750BHPPWR	NA	NA	NA	NA	NA
KT	Friction & Steel Module with A Pack 1 Sided 3/4 Powerpack Hi-Performance Red Eagle® & Kolene®	87-92	057757AHPPWR	NA	NA	057802	NA	NA

GENERAL MOTORS

4L60 TH700-R4 1982-92, 4L60E 1992-On
4L65E 2001-On, 4L70E 06-On

KITS - HI-PERFORMANCE with PowerPack®

ILL	Description	Years	Friction and Steel Module	Friction Module	Steel Module	Overhaul Kit	Banner Kit	Master Kit
KT	Friction & Steel Module with A Pack 1 Sided 3/4 Powerpack Hi-Performance Red Eagle® & Kolene®	92-On	057757AHPPWR	NA	NA	057804 *	NA	NA
	* For 1997 and On applications, Molded pistons							
	must be ordered separately							

MISCELLANEOUS GASKETS & KIT COMPONENTS

ILL	ALTO No.	REF No.	Description	Spec	Year	Qty	Notes
1G	057816	8642360	Gasket, Oil Pan	Cork/Rub	82-On	1	
2F	031050A	6261413	Lathe Cut, Front Pump to case		82-On	1	
N I	010115B	6264903	O Ring, Electrical Connector		82-On	1	
N I	032003	8626281	Washer, Front Pump bolts		82-86	7	
N I	M001001	24205103	Clip, Cooler line Retainer		96-On	2	

FRICTION CLUTCHES

ILL	ALTO No.	REF No.	Description	Spec	Year	Qty	Notes
3B	057730-200	8647350	Forward	.078	82-84	5	HEG - 41T - OD: 5.310" - SM
3B	057730-180	24210765	Forward	.070	85-On	5	HEG - 41T - OD: 5.310" - SM
4A	057732-200	8654306	Reverse Input	.078	82-87	4	HEG - 41T - OD: 6.039" - PL
4A	057732-180	8663080	Reverse Input	.070	87-On	4	HEG - 41T - OD: 6.039" - PL
5C	057704A	NA	3/4 Clutch - PowerPack® Component	.062	82-On	AR	Tan - 20T - OD: 5.742" - SM
5C	057734-200	8654145	3/4 Clutch	.080	82-00	6	HEG - 20T - OD: 5.742" - SM
5C	057734-168	24237477	3/4 Clutch - 4L65E hardened spline	.066	01-On	7	HEG - 20T - OD: 5.742" - SM
5C	057734-158	24216932	3/4 Clutch - PowerPack® Component	.062	82-On	AR	HEG - 20T - OD: 5.742" - SM
6B	057736-200	NA	Overrun	.078	82-On	2	HEG - 36T - OD: 5.037" - PL
7D	057708A220	NA	Low/Reverse	.087	82-On	5	Tan - 25T - OD: 6.461" - WF
7D	057738-220	NA	Low/Reverse	.087	82-On	5	HEG - 25T - OD: 6.461" - PL
N I	126710	19133076	Transfer Case (MP 3023-NQH)	.063	07-On	2	HEG - 54T - OD: 5.274" - PL
N I	185710-165	88935701	Transfer Case (NVG 125C. 225C) (1 sided) - internal spline	.065	02-On	9	HEG - 50T - ID: 4.989" - SB
N I	185711-165	88935700	Transfer Case (NVG 125C. 225C) (1 sided) - external spline	.065	02-On	9	HEG - 16T - ID: 3.815" - SB
N I	126700	12547607	Transfer Case (NVG 136, 236)	.087	98-On	8-10	HEG - 54T - OD: 6.080" - SM

FRICTION CLUTCHES - HI-PERFORMANCE

ILL	ALTO No.	REF No.	Description	Spec	Year	Qty	Notes
3B	057740	NA	Forward (Hardened Spline)	.078	82-84	5	Red - 41T - OD: 5.310" - SM
3B	057740A	NA	Forward (Hardened Spline)	.070	85-On	5	Red - 41T - OD: 5.310" - SM
4A	057742	NA	Reverse Input	.078	82-87	4	Red - 41T - OD: 6.031" - SM
4A	057742A	NA	Reverse Input	.070	87-On	4	Red - 41T - OD: 6.031" - SM
5C	057744	NA	3/4 Clutch	.080	82-On	6	Red - 20T - OD: 5.743" - SM
5C	057744C158	NA	3/4 Clutch - PowerPack® Component	.062	82-On	AR	G3BK - 20T - OD: 5.743" - SM
5C	057744A	NA	3/4 Clutch - PowerPack® Component	.062	82-On	AR	Red - 20T - OD: 5.743" - SM
5C	057744B210	NA	3/4 Clutch (1 sided) - internal spline PowerPack® Component	.083	82-On	6	Red - 20T - OD: 5.743" - SM
5C	057745B210	NA	3/4 Clutch (1 sided) - external spline PowerPack® Component	.083	82-On	6	Red - 20T - ID: 4.995" - SM
6B	057746	NA	Overrun	.075	82-On	2	Red - 36T - OD: 5.037" - SM
7D	057748	NA	Low/Reverse	.087	82-On	5	Red - 25T - OD: 6.466" - SM

GENERAL MOTORS

4L60 TH700-R4 1982-92, 4L60E 1992-On
4L65E 2001-On, 4L70E 06-On

FRICTION CLUTCHES - HI-PERFORMANCE - UNIT PACKS (ONE Rebuild)

ILL	ALTO No.	REF No.	Description	Spec	Year	Qty	Notes
KT	057740UP5	NA	Forward	.078	82-84	1	5 Red Eagle® Frictions
KT	057740AUP5	NA	Forward	.070	85-On	1	5 Red Eagle® Frictions
KT	057742UP4	NA	Reverse Input	.078	82-87	1	4 Red Eagle® Frictions
KT	057742AUP4	NA	Reverse Input	.070	87-On	1	4 Red Eagle® Frictions
KT	057744UP6	NA	3/4 Clutch	.080	82-On	1	6 Red Eagle® Frictions
KT	057744AUP9	NA	3/4 Clutch - PowerPack® Component	.062	82-On	1	9 Red Eagle® Frictions
KT	057746UP2	NA	Overrun	.075	82-On	1	2 Red Eagle® Friction
KT	057748UP5	NA	Low/Reverse	.087	82-On	1	5 Red Eagle® Frictions

STEEL CLUTCHES

ILL	ALTO No.	REF No.	Description	Spec	Year	Qty	Notes
8B	057701	8642167	Forward	.078	82-84	4	20T - ID: 4.257"
8B	057721	8654325	Forward	.090	85-On	4-5	20T - ID: 4.257"
8B	057717	8642711	Forward - 6 cylinder engines	.078	82-86	1	10T - ID: 4.257"
9B	057729	8647058	Forward - wave	.069	84-3/95	1	20T - ID: 4.257"
9B	057729A	24203903	Forward - wave	.069	4/95-On	AR	12T - ID: 4.257"
9B	057729A110	8685050	Forward - wave	.044	94-On	AR	12T - ID: 4.257"
9B	057729A130	8686010	Forward - wave	.052	94-On	AR	12T - ID: 4.257"
10A	057703	8673601	Reverse Input	.078	82-On	3-4	36T - ID: 5.084"
10A	057703H	24205267	Reverse Input with Turbulator Holes	.078	82-On	3-4	36T - ID: 5.084"
10A	057703-230	NA	Reverse Input - oversize	.090	82-On	AR	36T - ID: 5.084"
10A	057703H230	NA	Reverse Input - oversize with Turbulator Holes	.090	82-On	AR	36T - ID: 5.084"
11A	057711	8642060	Reverse Input - wave	.088	82-83	1	36T - ID: 5.084"
11A	057731	8647067	Reverse Input - wave	.080	84-87	1	36T - ID: 5.084"
11A	057766	8663074	Reverse Input - dish	.091	87-On	AR	36T - ID: 5.084"
11A	057766-130	8685893	Reverse Input - dish	.051	88-On	AR	36T - ID: 5.084"
11A	057703A089	NA	DrumSaver® - reverse input		87-On	1	36T - ID: 5.084"
11A	057766-180	8685892	Reverse Input - dish	.071	88-On	AR	36T - ID: 5.084"
12C	057705	8678054	3/4 Clutch (1987-92 = 1)	.077	82-92	5/1	15T - ID: 4.995"
12C	057725	8678053	3/4 Clutch with notch (does retro)	.076	82-1/93	5	20T - ID: 4.995"
12C	057725-270	8685045	3/4 Clutch	.106	1/93-On	5	20T - ID: 4.995"
12C	057725-300	NA	3/4 Clutch - selective	.118	82-On	5	20T - ID: 4.995"
12C	057725A270	8685045	3/4 Clutch - OE surface finish (Lindered)	.106	1/93-On	5	20T - ID: 4.995"
12C	057725A242	24216939	3/4 Clutch -OE surface finish (Lindered)	.095	01-On	6	20T - ID: 4.995"
12C	057725A	8663633	3/4 Clutch - PowerPack® Component	.060	82-On	AR	20T - ID: 4.995"
13B	057707	8642154	Overrun	.092	82-On	2	10T - ID: 4.262"
14D	032701	8680439	Low/Reverse	.068	82-On	5	17T - ID: 5.727"
14D	032701H	24205268	Low/Reverse with Turbulator Holes	.068	82-On	5	17T - ID: 5.727"
21D	057761	8676362	Low/Reverse - wave	.095	87-On	1	17T - ID: 5.727"
N I	126711	19133077	Transfer Case (MP 3023-NQH)	.059	07-On	1	30T - ID: 3.879"
N I	126701	12547608	Transfer Case (NVG 136, 236)	.067	98-On	8-9	12T - ID: 5.023"

STEEL CLUTCHES - HI-PERFORMANCE - Kolene®

ILL	ALTO No.	REF No.	Description	Spec	Year	Qty	Notes
8B	057701K	NA	Forward	.078	82-84	4	Kol - 20T - ID: 4.257"
8B	057721K	NA	Forward	.090	85-On	4-5	Kol - 20T - ID: 4.257"
10A	057703K	NA	Reverse Input	.078	82-On	3-4	Kol - 36T - ID: 5.084"
10A	057703HK	NA	Reverse Input with Turbulator Holes	.078	82-On	3-4	Kol - 36T - ID: 5.084"
12C	057725K	NA	3/4 Clutch	.076	82-1/93	5	Kol - 20T - ID: 4.995"
12C	057725K270	NA	3/4 Clutch	.106	1/93-On	5	Kol - 20T - ID: 4.995"
12C	057725AK	NA	3/4 Clutch - PowerPack® Component	.060	82-On	AR	Kol - 20T - ID: 4.995"

GENERAL MOTORS

4L60 TH700-R4 1982-92, 4L60E 1992-On
4L65E 2001-On, 4L70E 06-On

STEEL CLUTCHES - HI-PERFORMANCE - Kolene®

ILL	ALTO No.	REF No.	Description	Spec	Year	Qty	Notes
13B	057707K	NA	Overrun	.092	82-On	2	Kol - 10T - ID: 4.262"
14D	032701K	NA	Low/Reverse	.068	82-On	5	Kol - 17T - ID: 5.727"
14D	032701HK	NA	Low/Reverse with Turbulator Holes	.068	69-86	5	Kol - 17T - ID: 5.727"

STEEL CLUTCHES - HI-PERFORMANCE - UNIT PACKS (ONE Rebuild)

ILL	ALTO No.	REF No.	Description	Spec	Year	Qty	Notes
KT	057701KUP4	NA	UNIT PACK - Forward	.078	82-84	1	4 Kolene® Steels
KT	057721KUP5	NA	UNIT PACK - Forward	.090	85-On	1	5 Kolene® Steels
KT	057703KUP4	NA	UNIT PACK - Reverse Input	.078	82-On	1	4 Kolene® Steels
KT	057703HKUP4	NA	UNIT PACK - Reverse Input with Turbulator Holes	.078	82-95	1	4 Kolene® Steels
KT	057725KUP5	NA	UNIT PACK - 3/4 Clutch	.076	82-1/93	1	5 Kolene® Steels
KT	057725AKUP10	NA	UNIT PACK - 3/4 Clutch PowerPack® Comp	.060	82-On	1	10 Kolene® Steel
KT	057713UP1	NA	UNIT PACK - 3/4 Clutch PowerPack® Comp	.128	82-On	1	1 Pressure Plate
KT	057707KUP2	NA	UNIT PACK - Overrun	.092	82-On	1	2 Kolene® Steels
KT	032701KUP5	NA	UNIT PACK - Low/Reverse	.068	82-On	1	5 Kolene® Steels
KT	032701HKUP5	NA	UNIT PACK - Low/Reverse with Turbulator Holes	.068	69-86	1	5 Kolene® Steels

PRESSURE PLATES

ILL	ALTO No.	REF No.	Description	Spec	Year	Qty	Notes
16B	TBA	NA	Forward - apply	.250	82-86	1	
16B	057760K	8682866	Forward - apply	.170	87-On	1	
17B	057760-675	8642169	Forward - backing	.265	82-86	AR	
17B	057760A947	8682867	Forward - backing (A)	.275	87-On	AR	
17B	057760A898	8682868	Forward - backing (B)	.253	87-On	AR	
17B	057760A829	8682869	Forward - backing (C)	.229	87-On	AR	
17B	TBA	8682870	Forward - backing (D)	.205	87-On	AR	
17B	057760A462	8682871	Forward - backing (E)	.182	87-On	AR	
18A	057761-630	8663654	Reverse Input - backing	.250	82-86	1	
18A	057761-752	8682863	Reverse Input - backing	.296	87-On	AR	
18A	057761-660	8682864	Reverse Input - backing	.269	87-On	AR	
18A	057761-600	8682865	Reverse Input - backing	.218	87-On	AR	
19C	057713	8642172	3/4 Clutch - apply	.128	82-89	1	
19C	057764B420	NA	3/4 Clutch - apply	.165	92-On	1	
19C	057764B530	24217451	3/4 Clutch - apply	.213	92-On	1	
19C	057764B560	8685044	3/4 Clutch - apply	.218	90-On	1	
20C	057764-600	8642622	3/4 Clutch - backing (#2)	.241	82-86	AR	
20C	057764A500	8642623	3/4 Clutch - backing (#3)	.202	82-86	AR	
20C	057764A400	8642624	3/4 Clutch - backing (#4)	.163	82-86	AR	
20C	057764-490	8685047	3/4 Clutch - backing (B)	.193	93-On	AR	
15D	057719B	8667584	Low/Reverse - Spacer	.094	87	AR	17T - ID: 5.727"
15D	057719C	8667585	Low/Reverse - Spacer	.125	87	AR	17T - ID: 5.727"
15D	057719D	8680440	Low/Reverse - Spacer	.049	88-On	AR	17T - ID: 5.727"
15D	057719DH	24205269	Low/Reverse - Spacer with Turb. Holes	.049	99-On	AR	17T - ID: 5.727"
15D	057719E	8680441	Low/Reverse - Spacer	.089	88-On	AR	17T - ID: 5.727"
15D	057719EH	NA	Low/Reverse - Spacer with Turb. Holes	.089	99-On	AR	17T - ID: 5.727"

OEI® Original Equipment Improvements

ILL	ALTO No.	REF No.	Description	Spec	Year	Qty	Notes
KT	057757A	NA	3/4 Clutch PowerPack® - Red Eagle®		82-On	1	Hi-Performance One-Sided
KT	057757B	NA	3/4 Clutch PowerPack®		82-On	1	Tan
KT	057757BHP	NA	3/4 Clutch PowerPack® - Red Eagle®		82-On	1	Hi-Performance

GENERAL MOTORS

4L60 TH700-R4 1982-92, 4L60E 1992-On
4L65E 2001-On, 4L70E 06-On

OEI® Original Equipment Improvements

ILL	ALTO No.	REF No.	Description	Spec	Year	Qty	Notes
KT	057757C	NA	3/4 Clutch PowerPack®		82-On	1	High Energy
KT	057757D	NA	3/4 Clutch PowerPack® - G3		82-On	1	Hi-Performance
KT	057757DX	NA	3/4 Clutch PowerPack® - G3		82-On	1	Sonnax Smart-Tech Drum Only
KT	057758	NA	DrumSaver® Kit - Reverse Input		87-On	1	
57E	057301	NA	Servo Pin - Modified (extended)		82-On	1	Extended for better band adjustability
KT	057985	SK® 700	Shift Kit® - 4L60	Transgo®	82-93	1	
KT	057986	SK® 700JR	Shift Kit® JRT - 4L60	Transgo®	82-93	1	
KT	057987	SK® 4L60E	Shift Kit® - 4L60E	Transgo®	92-On	1	
KT	057988	700-2&3	Reprogramming Kit™	Transgo®	82-On	1	
KT	057991	4L60E-HD2	Reprogramming Kit™	Transgo®	92-On	1	Heavy Duty
KT	057991A	4L60E-3	Reprogramming Kit™	Transgo®	92-On	1	Racing

BANDS

ILL	ALTO No.	REF No.	Description	Spec	Year	Qty	Notes
21A	057950	24201131	2-4 Intermediate - 2-1/4" wide	Tan	82-On	1	

BANDS - HI-PERFORMANCE - Red Eagle® or Carbonite®

ILL	ALTO No.	REF No.	Description	Spec	Year	Qty	Notes
21A	057960	NA	2-4 Intermediate - Heavy Duty 2-1/4" wide	Red	82-On	1	Red Eagle®
21A	057960C	NA	2-4 Intermediate - Super Duty - 2-1/4" wide with Heat Treated Thick Anchors	Crb	82-On	1	Carbonite®
21A	057961	NA	2-4 Intermediate - Heavy Duty PowerBand® - 2-5/8" wide	Red	82-On	1	Red Eagle®
21A	057961C	NA	2-4 Intermediate - Super Duty PowerBand® - 2-5/8" wide	Crb	82-On	1	Carbonite®

FILTERS

ILL	ALTO No.	REF No.	Description	Spec	Year	Qty	Notes
22G	057940	8667689	Filter - 4L60, TH700-R4		82-93	1	
22G	057944	24208149	Filter - 4L60E - Corvette		97-On	1	
22G	057946	24208576	Filter - 4L60E - Truck (2 7/8" thick) all 4WD, Van		98-On	1	
22G	057946A	24208813	Filter - 4L60E - deep pan light truck, retro fit all 4WD, Van		98-On	1	plastic
22G	057946B	24225323	Filter - 4L60E, 4L65E Chevy Truck, Colorado, Canyon		04-On	1	
22G	057942	8685774	Filter - 4L60E - Car (2 1/4" thick)		92-On	1	
23F	057551	8642912	Screen - Pump Cover		82-On	1	
24F	057552	12338044	Screen - TCC & Governor feed		82-On	1	

METAL CLAD SEALS

ILL	ALTO No.	REF No.	Description	Spec	Year	Qty	Notes
25F	043400	24202535	Front Pump	Vamac®	82-On	1	
26E	032402	8673526	Extension Housing - Flange / No boot		82-On	1	
26E	057405	24201470	Extension Housing - Flange / with boot		94-On	1	
26E	057406	24207010	Extension Housing - Corvette		97-On	1	
N I	032410C	8623056	Manual Lever		82-On	1	
27F	057501	8654491	Front Pump seal retainer		82-On	1	

GENERAL MOTORS

4L60 TH700-R4 1982-92, 4L60E 1992-On
4L65E 2001-On, 4L70E 06-On

SEALING RINGS

ILL	ALTO No.	REF No.	Description	Spec	Year	Qty	Notes
KT	057600	C355	Sealing Ring Kit, 4L60 - 19T		82-92	1	
KT	057601	C377	Sealing Ring Kit, 4L60E - 11T		92-On	1	
KT	057602	NA	Sealing Ring Kit - servo D-Ring (5)		82-On	1	
28F	043100	8628055	Stator Support - scarf cut		82-92	2	
28F	043100A	8681292	Stator Support - solid		92-On	2	
29A	057100	8667035	Turbine Shaft - solid		82-On	4	
30E	057105	8642480	4th Apply piston - outer		82-On	1	
31E	057103	8642458	2nd Apply piston - inner	2.324	82-On	1	
31E	057102	8642084	2nd Apply piston - inner	1.804	82-On	1	
31E	057103A	8642459	2nd Apply piston - inner	2.530	82-On	1	
32E	057104	8642081	2nd Apply piston - outer		82-On	1	
33F	043117	8634161	3-4 / 1-2 Accumulator piston		82-92	2	
N I	043115	8630120	2nd Servo pin		82-On	2	

SNAP RINGS

ILL	ALTO No.	REF No.	Description	Spec	Year	Qty	Notes
KT	057680	NA	Snap Ring Kit		82-On	1	
36C	A40048M	12547465	Transfer Case - Front Case Bearing		82-On	1	
36C	057254-128	8642177	3/4 Clutch Drum	.128	82-86	1	
36C	057254-093	8663636	3/4 Clutch Drum	.093	87-On	1	
36C	057254-062	NA	3/4 Clutch Drum - Selective	.062	87-On	AR	
39C	057253	8654141	Output shaft to Input Planet		82-On	1	

BUSHINGS

ILL	ALTO No.	REF No.	Description	Spec	Year	Qty	Notes
KT	057625	NA	Bushing Kit - 30 spline		84-On	1	13 Bushings
KT	057625A	NA	Bushing Kit - 30 spline		84-On	1	12 Bushings
43F	057200	24206030	Front Pump Body	Bronze	82-On	1	
N I	156206	8682860	Front Pump Body	Teflon	82-On	1	
44F	043201	8628915	Front Pump Stator - Front	27 spline	82-84	1	
44F	032212	NA	Front Pump Stator - Front	.655	84-On	1	30 spline
45F	057202	8642904	Front Pump Stator - Rear		82-On	1	
46A	057204	8647035	Reverse Input drum - Front		82-On	1	
47A	043204	8628917	Reverse Input drum - Rear		82-On	1	
48C	057205	8642181	Input Sun gear - Front & Rear		82-On	2	
49C	057206	8642908	Reaction Carrier Shaft - Front		82-On	1	
50C	057207	8642907	Reaction Carrier Shaft - Rear		82-On	1	
51C	057208	8642909	Reaction Sun Gear		82-On	1	
52F	032207	8641118	Case	Babbit	82-On	1	
52F	032207A	8680027	Case	Bronze	82-On	1	
53E	032208	6260048	Extension Housing	Bronze	82-On	1	
53E	032208A	3717682	Extension Housing	Babbit	82-On	1	

WASHERS

ILL	ALTO No.	REF No.	Description	Spec	Year	Qty	Notes
KT	057635	NA	Washer Kit		82-On	1	8 Washers (5 Metal/3 Plastic)

ELECTRONIC CONTROL COMPONENTS

ILL	ALTO No.	REF No.	Description	Spec	Year	Qty	Notes
N I	031501	24220158	Solenoid EPC Variable Force Motor 4L60E		93-02	1	

GENERAL MOTORS

4L60 TH700-R4 1982-92, 4L60E 1992-On
4L65E 2001-On, 4L70E 06-On

ELECTRONIC CONTROL COMPONENTS

ILL	ALTO No.	REF No.	Description	Spec	Year	Qty	Notes
N I	031501A	24220158	Solenoid EPC Variable Force Motor 4L60E (BW)		93-02	1	
N I	057503	50085	Solenoid EPC Variable		03-On	1	
N I	057504	10478131	Solenoid Universal		92-On	1	
N I	057507	24212327 50101	Solenoid 3-2 Shift (on-off) 4L60E, 4L65E (BW)		96-On	1	
N I	062504	24212690 50137	Solenoid TCC/PWM 4L60E (BW)		93-On	1	

PISTONS

ILL	ALTO No.	REF No.	Description	Spec	Year	Qty	Notes
KT	057670B	NA	Piston Kit		93-On	1	
54B	057338B	24205272	Molded Piston, Forward Clutch		97-On	1	
55B	057337B	24205273	Molded Piston, Overrun Clutch		97-On	1	
56B	057339B	24200290	Molded Piston, 3/4 Clutch		97-On	1	

HARD PARTS

ILL	ALTO No.	REF No.	Description	Spec	Year	Qty	Notes
NI	057322B	PS9001	Sprag, Forward		87-On	1	

MISCELLANEOUS

ILL	ALTO No.	REF No.	Description	Spec	Year	Qty	Notes
N I	057315	24203265	Bolt, Bell Housing to Case - Torx Plus®	M10	82-On	8	Does Retro-fit
KT	057315UP8	NA	Bolt, Bell Housing to Case - Torx Plus® (Pack)	M10	82-On	1	8 Bolt Pack
N I	057248S	NA	1/16" Hex Plug	Steel	82-On	AR	
N I	057249	NA	1/8" Hex Plug	Brass	82-On	AR	
N I	057249S	NA	1/8" Hex Plug	Steel	82-On	AR	

GENERAL MOTORS

4T80E

1993-On

A>

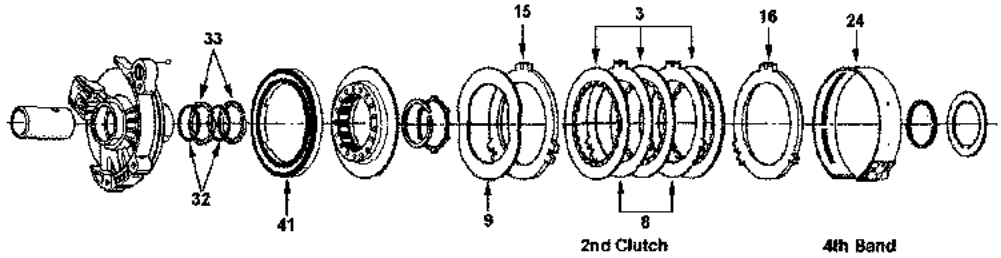

B>

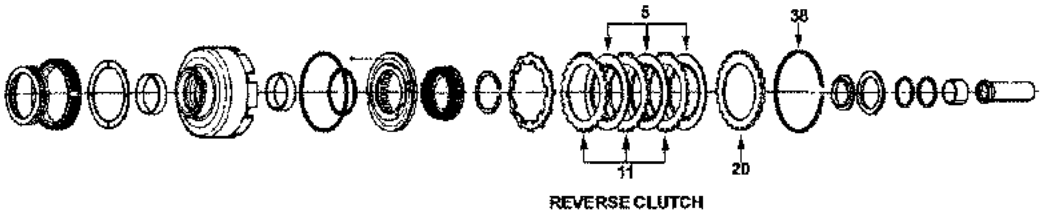

C>

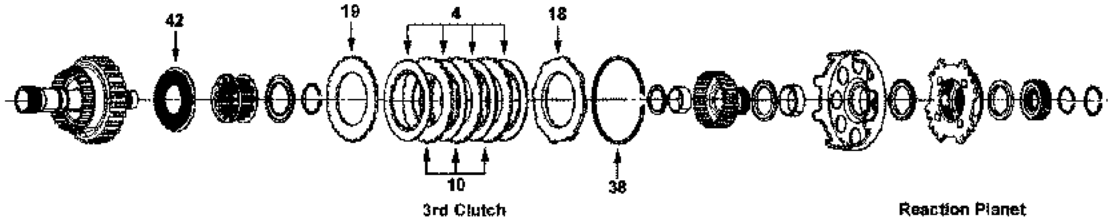

D>

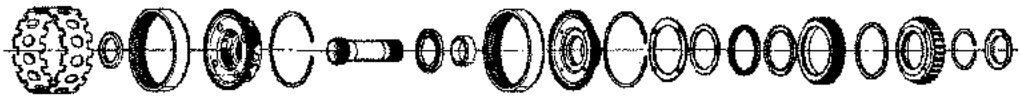

INPUT PLANET

E>

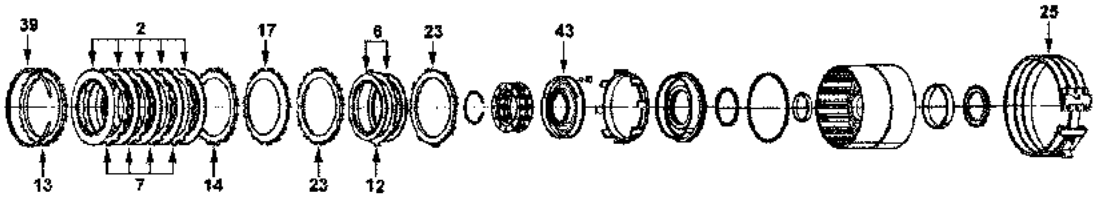

F>

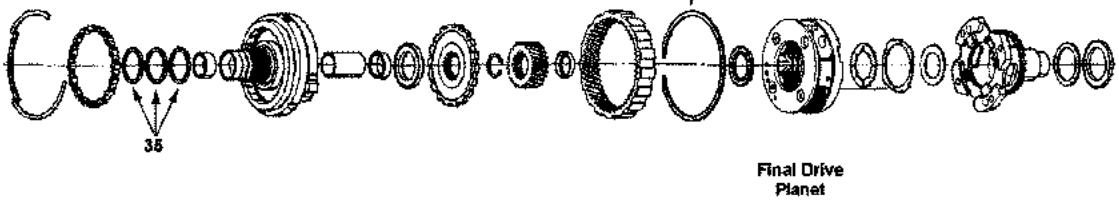

GENERAL MOTORS

4T80E

1993-On

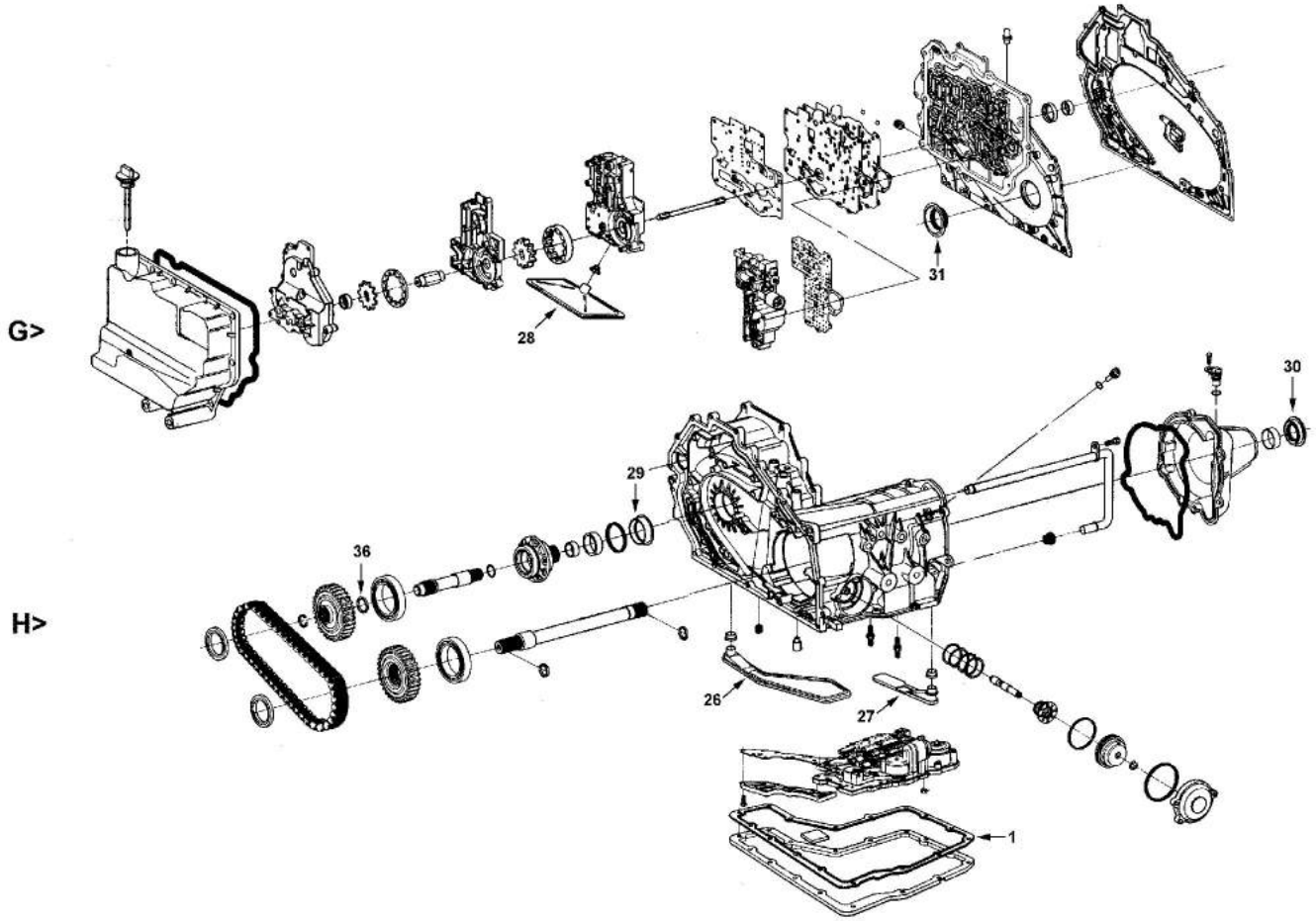

KITS

***Add Suffix SK for Super Kit**

ILL	Description	Years	Friction Module	Steel Module	Overhaul Kit	Banner Kit	Master Kit
KT	Rebuilding Kit - without Molded Pistons	93-94	111752	111753	111800	111901LS	111901
KT	Rebuilding Kit - without Molded Pistons	95-On	111752A	111753A	111800	111901ALS	111901A

MISCELLANEOUS GASKETS & KIT COMPONENTS

ILL	ALTO No.	REF No.	Description	Spec	Year	Qty	Notes
1H	111816	24209512	Gasket, Oil Pan	M.Rubber	93-On	1	

FRICTION CLUTCHES

ILL	ALTO No.	REF No.	Description	Spec	Year	Qty	Notes
2E	111700	24206898	Forward Clutch	.081	93-On	5	Tan - 53T - OD: 6.416" - SB
2E	111700A205	NA	Forward Clutch	.081	93-On	5	HEG - 53T - OD: 6.416" - SB
3A	111702	8681371	2nd Clutch	.081	93-94	3	HEG - 54T - OD: 7.522" - SM
3A	111702-180	24201546	2nd Clutch	.071	95-On	4	HEG - 54T - OD: 7.522" - SM
4C	111704	8684832	3rd Clutch	.081	93-On	4	Tan - 26T - OD: 5.941" - SB
5B	111706	24206838	Reverse Clutch	.081	93-On	3	Tan - 26T - OD: 5.941" - SB
6E	111708	8677829	Coast Clutch	.081	93-94	2	Tan - 51T - OD: 6.258" - SB
6E	111708A	24206896	Coast Clutch	.081	95-On	2	Tan - 53T - OD: 6.258" - SB

GENERAL MOTORS

4T80E

1993-On

STEEL CLUTCHES

ILL	ALTO No.	REF No.	Description	Spec	Year	Qty	Notes
7E	111701	8679584	Forward Clutch	.077	93-On	4	16T - ID: 5.188"
17E	TBA	8684654	Forward Clutch - belleville		94-On	1	
8A	111703	8681834	2nd Clutch	.091	93-94	2	5T - ID: 5.560"
8A	111703-205	8684721	2nd Clutch	.081	95-On	3	5T - ID: 5.560"
9A	TBA	8681832	2nd Clutch - wave		93-94	1	
9A	TBA	24201542	2nd Clutch - wave		95-On	1	
10C	111705	8677612	3rd Clutch	.091	93-On	3	22T - ID: 3.980"
11B	111707	8677616	Reverse Clutch	.091	93-On	3	22T - ID: 4.695"
12E	111709	8677808	Coast Clutch	.123	93-On	1	8T - ID: 5.187"

PRESSURE PLATES

ILL	ALTO No.	REF No.	Description	Spec	Year	Qty	Notes
13E	TBA	8684655	Forward Clutch - backing	.290	93-On	AR	
13E	TBA	8684662	Forward Clutch - backing	.361	93-98	AR	
13E	TBA	8684663	Forward Clutch - backing	.371	93-98	AR	
13E	TBA	24202648	Forward Clutch - backing	.300	93-On	AR	
13E	TBA	24202649	Forward Clutch - backing	.310	93-On	AR	
13E	TBA	24202650	Forward Clutch - backing	.320	93-On	AR	
13E	TBA	24202651	Forward Clutch - backing	.330	93-On	AR	
13E	TBA	24202652	Forward Clutch - backing	.340	93-On	AR	
13E	TBA	24202653	Forward Clutch - backing	.350	93-On	AR	
14E	TBA	8680622	Forward Clutch - apply		93	1	
14E	TBA	8684653	Forward Clutch - apply		94-On	1	
15A	TBA	8684720	2nd Clutch - backing		93-94	1	
16A	TBA	8684719	2nd Clutch - apply		93-94	1	
18C	111763-800	8678722	3rd Clutch - backing	.315	93-On	1	
19C	111762L358	8677613	3rd Clutch - apply	.140	93-On	1	
20B	TBA	8680118	Reverse Clutch - backing	.177	93-98	AR	1st Design
20B	TBA	8680119	Reverse Clutch - backing	.200	93-98	AR	1st Design
20B	TBA	8680120	Reverse Clutch - backing	.220	93-98	AR	1st Design
20B	TBA	24212649	Reverse Clutch - backing (C)		98-On	AR	2nd Design
20B	TBA	24212650	Reverse Clutch - backing (D)		98-On	AR	2nd Design
20B	TBA	24212651	Reverse Clutch - backing (E)		98-On	AR	2nd Design
21B	TBA	24200288	Reverse Clutch - apply		93-98	1	1st Design
21B	TBA	24212652	Reverse Clutch - apply		98-On	1	2nd Design
22E	TBA	8684653	Coast Clutch - backing		93-On	1	
23E	TBA	8679837	Coast Clutch - apply		93-On	1	

BANDS

ILL	ALTO No.	REF No.	Description	Spec	Year	Qty	Notes
24A	111950	8684246	4th Clutch	Tan	93-On	1	
25E	111951	24204502	Low/Reverse (Double wrap)	Tan	93-On	1	

FILTERS

ILL	ALTO No.	REF No.	Description	Spec	Year	Qty	Notes
26H	111940	24207361	Left Scavenger Filter		93-On	1	
27H	111942	8679416	Right Scavenger Filter		93-On	1	
28G	111944	8681416	Filter in side cover		93-On	1	

GENERAL MOTORS

4T80E

1993-On

METAL CLAD SEALS

ILL	ALTO No.	REF No.	Description	Spec	Year	Qty	Notes
29H	111400	8677749	Front Pump		93-On	1	
30H	111425	8677554	Right Axle		93-On	1	
31G	111426	8679679	Left Axle		93-On	1	
N I	048402A	8644709	Manual Lever		93-On	1	

SEALING RINGS

ILL	ALTO No.	REF No.	Description	Spec	Year	Qty	Notes
KT	111600	C390	Sealing Ring Kit - 5P/2R/3T		93-On	1	
32A	111100	8678234	Driven Sprocket Support (2nd Clutch)	Peak®	93-On	2	Vespel® may be substituted
33A	111050	8678234	Quad Seal expander for Above	Rubber	93-On	2	
34B	062101	8656342	Input Shaft		93-On	2	
35F	062102	8679587	Input & Coast Support		93-On	3	
36H	062103	8679881	Drive sprocket rear		93-On	1	

ELECTRONIC CONTROL COMPONENTS

ILL	ALTO No.	REF No.	Description	Spec	Year	Qty	Notes
N I	031501	24220158	Solenoid EPC Variable Force Motor		93-03	1	
N I	031501A	24220158	Solenoid EPC Variable Force Motor (BW)		93-03	1	
N I	031504	24225320	Solenoid EPC Variable Force Motor - Holly design (BW)		04-On	1	
N I	062504	24212690	Solenoid TCC/PWM (BW)		93-On	1	

MOLDED PISTONS

ILL	ALTO No.	REF No.	Description	Spec	Year	Qty	Notes
41A	111330	24207753	Bonded Piston, 2nd Clutch		93-On	1	
42C	111331	24207754	Bonded Piston, 3rd Clutch		93-On	1	
43E	111332	24207755	Bonded Piston, Coast Clutch		93-On	1	

GENERAL MOTORS / FORD

GM 6T70, 6T75 6 Speed 2007-On

FORD 6F50, 6F55 6 Speed 2007-On

KITS

*Add Suffix SK for Super Kit

ILL	Description	Years	Friction Module	Steel Module	Overhaul Kit	Banner Kit	Master Kit
KT	Rebuilding Kit 6T70/75 - with Molded Pistons	07-On	196752	196753	196802	196903LS	196903
KT	Rebuilding Kit 6T70/75 - without Molded Pistons	07-On	196752	196753	196802X	196903XLS	196903X
KT	Rebuilding Kit 6F50/55 - with Molded Pistons	07-On	196752	196753	196804	196905LS	196905
KT	Rebuilding Kit 6F50/55 - without Molded Pistons	07-On	196752	196753	196804X	196905XLS	196905X

FRICTION CLUTCHES

ILL	ALTO No.	REF No.	Description	Spec	Year	Qty	Notes
N I	196702-157	24236490	4, 5, 6 Clutch	.062/1.57	07-On	6	HEG - 24T - OD: 4.759" - SB
N I	196704-157	24238954	3, 5, Reverse Clutch - external spline	.062/1.57	07-On	4	HEG - 36T - ID: 5.628" - SB
N I	196700-152	24238273	2, 6 Clutch	.062/1.57	07-On	3	HEG - 36T - OD: 8.234" - SB
N I	196706-157	24223700	Low / Reverse Clutch	.062/1.57	07-On	4	HEG - 48T - OD: 8.620" - PLNI
N I	196708-160	24238272	1, 2, 3, 4 Clutch	.061/1.55	07-On	2	HEG - 36T - OD: 8.187" - SB

STEEL CLUTCHES

ILL	ALTO No.	REF No.	Description	Spec	Year	Qty	Notes
N I	196703-173	24223820	4, 5, 6 Clutch	.070/1.78	07-On	6	36T - ID: 3.931"
N I	196705W	NA	3, 5, Reverse Clutch - wave	.050/1.27	07-On	4	36T - OD: 6.587"
N I	196705-292	24223812	3, 5, Reverse Clutch - internal spline	.115/2.92	07-On	4	36T - OD: 6.587"
N I	196701-290	24223706	2, 6 Clutch	.115/2.92	07-On	3	5T - ID: 7.194"
N I	196707-173	24223699	Low / Reverse Clutch	.069/1.75	07-On	3	10T - ID: 7.758"
N I	196709-216	24223728	1, 2, 3, 4 Clutch	.085/2.16	07-On	2	12T - ID: 6.887"

FILTERS

ILL	ALTO No.	REF No.	Description	Spec	Year	Qty	Notes
N I	196940	24223670	Filter		07-On	1	

BUSHINGS

ILL	ALTO No.	REF No.	Description	Spec	Year	Qty	Notes
KT	196625	NA	Bushing Kit	Bronze	07-On	1	contains 8 bushings

MOLDED PISTONS

ILL	ALTO No.	REF No.	Description	Spec	Year	Qty	Notes
N I	196670	NA	Piston kit		07-On	1	contains 5 pistons
N I	196300	24223887	2-6 clutch		07-On	1	
N I	196301	24223884	Low-Reverse clutch		07-On	1	
N I	196302	24223803	3-5-Reverse clutch		07-On	1	
N I	196303	24231514	4-5-6 clutch		07-On	1	
N I	196304	NA	1-2-3-4 clutch		07-On	1	

GENERAL MOTORS

GM 6T40, 6T45 2006-On

CHEVY, PONTIAC, SATURN

KITS

*Add Suffix SK for Super Kit

ILL	Description	Years	Friction Module	Steel Module	Overhaul Kit	Banner Kit	Master Kit
KT	Rebuilding Kit with Molded Pistons - Generation 1	06-11	204752	204753	204800	204901LS	204901
KT	Rebuilding Kit without Molded Pistons - Generation 1	06-11	204752	204753	204800X	204901XLS	204901X
KT	Rebuilding Kit with Molded Pistons - Generation 2	12-On	204752B	204753	204804	204905LS	204905
KT	Rebuilding Kit without Molded Pistons - Generation 2	12-On	204752B	204753	204804X	204905XLS	204905X

FRICTION CLUTCHES - GENERATION 1

ILL	ALTO No.	REF No.	Description	Spec	Year	Qty	Notes
N I	204700-147	24248898	1-2-3-4 Clutch	.058/1.47	06-11	2	HEG - 36T - OD: 8.585" - SM
N I	204702-160	24231257	Low/Reverse Clutch	.063/1.6	06-11	3	HEG - 48T - OD: 8.540" - PLNI
N I	204700-147	24248898	2-6 Clutch	.058/1.47	06-11	2	HEG - 36T - OD: 8.585" - SM
N I	204706-155	CV6Z-7B164-A	4-5-6 Clutch	.061/1.55	06-11	4	HEG - 24T - OD: 4.800" - SB
N I	204708-160	CV6Z-7B164-D	3-5-Reverse Clutch - external spline	.063/1.6	06-11	3	HEG - 36T - ID: 5.710" - SM

FRICTION CLUTCHES - GENERATION 2

ILL	ALTO No.	REF No.	Description	Spec	Year	Qty	Notes
N I	204710-142	24260695	1-2-3-4 Clutch	.056/1.42	12-On	2	HEG - 36T - OD: 8.340" - SM
N I	204712-155	24260695	Low/Reverse Clutch	.061/1.55	12-On	3	HEG - 48T - OD: 8.420" -C24 PLNI
N I	204700A155	24260695	2-6 Clutch	.061/1.55	12-On	2	HEG - 36T - OD: 8.591" - SB
N I	204706-155	24230754	4-5-6 Clutch	.061/1.55	12-On	3	HEG - 24T - OD: 4.800" - SB
N I	204708A142	24260695	3-5-Reverse Clutch - external spline	.056/1.42	12-On	3	HEG - 36T - ID: 5.710" - SB

STEEL CLUTCHES - ALL

ILL	ALTO No.	REF No.	Description	Spec	Year	Qty	Notes
N I	204701-170	24231263	1-2-3-4 Clutch	.067/1.7	06-On	2	11T - ID: 7.450"
N I	204703-170	24231258	Low/Reverse Clutch	.067/1.7	06-On	3	12T - ID: 7.640"
N I	204705-290	24230731	2-6 Clutch	.114/2.9	06-On	2	15T - ID: 7.450"
N I	204707-173	24231255	4-5-6 Clutch	.068/1.73	06-On	3	36T - ID: 3.780"
N I	204707-287	24230753	4-5-6 Clutch	.113/2.87	06-On	1	36T - ID: 3.780"
N I	204709-287	24230758	3-5-Reverse Clutch - internal spline	.113/2.87	06-On	3	36T - OD: 6.810"
N I	204709W	NA	3-5-Reverse Clutch - internal spline wave	.037/0.94	06-On	1	36T - OD: 6.816"

FILTERS

ILL	ALTO No.	REF No.	Description	Spec	Year	Qty	Notes
N I	204940	24230708	Filter		06-On	1	

SNAP RING

ILL	ALTO No.	REF No.	Description	Spec	Year	Qty	Notes
N I	204250	24253298	3-5 Reverse		06-On	AR	

BUSHINGS

ILL	ALTO No.	REF No.	Description	Spec	Year	Qty	Notes
N I	204625B	NA	Bushing Kit		06-On	1	
N I	204200	NA	Case - Driver's Side		06-On	1	
N I	204201	NA	Reaction Sun Gear		06-On	1	
N I	204201A	NA	Reaction Sun Gear Hub		06-On	1	
N I	204202	NA	Output Planetary Sun Gear		06-On	1	
N I	204202A	NA	Output Planetary Sun Gear Hub		06-On	1	
N I	204203	NA	Drum		06-On	1	
N I	204203A	NA	Drum		06-On	1	

GENERAL MOTORS

GM 6T40, 6T45 2006-On

CHEVY, PONTIAC, SATURN

BUSHINGS

ILL	ALTO No.	REF No.	Description	Spec	Year	Qty	Notes
N I	204204	NA	Front Pump		06-On	1	
N I	204205	NA	Stator Shaft		06-On	1	

ELECTRONIC CONTROL COMPONENTS

ILL	ALTO No.	REF No.	Description	Spec	Year	Qty	Notes
N I	204500	24259852	Sensor - 6T45 Output speed		06-On	1	
N I	204570	NA	Solenoid Kit - Generation 1 and 2		06-On	1	

PISTONS

ILL	ALTO No.	REF No.	Description	Spec	Year	Qty	Notes
KT	204670	NA	Piston Kit - Combo		08-On	1	
N I	204300	24259455	Piston - Forward 1-2-3-4 Clutch		08-On	1	
N I	204301	24266145	Piston - Direct 3-5-Reverse Clutch		08-On	1	
N I	204302	24257108	Piston - Intermediate 2-6 Clutch		08-On	1	
N I	204303	24257110	Piston - Low/Reverse Clutch		08-On	1	
N I	204304	24253624	Piston - Overdrive 4-5, 5-6 Clutch		08-12	1	
N I	204304A	24261299	Piston - Overdrive 4-5, 5-6 Clutch		12-On	1	

HARD PARTS

ILL	ALTO No.	REF No.	Description	Spec	Year	Qty	Notes
N I	129320	BW-SP-5	Sprag Torque Converter	22 Element	06-On	1	
N I	204335ND	NA	Hub Drumm Assembly with Shaft		06-On	1	
N I	204350AND	NA	Input Planetary		06-On	1	
N I	204350BND	NA	Output Planetary		06-On	1	
N I	204350CND	NA	Planetary Reaction - GM		06-On	1	3 Ear
N I	204350CXND	NA	Planetary Reaction without Ring Gear - GM		06-On	1	3 Ear
N I	204350DND	NA	Planetary Reaction - Ford		06-On	1	4 Ear
N I	204351	NA	4-5-6/3-5 Rev Drum Assembly		06-On	1	
N I	204351AND	NA	Drum Assembly 3-5-Reverse - New		06-On	1	
N I	204351AU	NA	Drum Assembly 3-5- Reverse - Used		06-On	1	
N I	204352	NA	Rear 3 Ring Support		06-On	1	
N I	204353	NA	Sun Gear		06-On	1	
N I	204354	NA	Reaction Planetary - 3 Legs		06-On	1	
N I	204356U	24231261	Center Support		06-On	1	
N I	204550	NA	Drum Assembly with Rear 3 Ring Support		06-On	1	
N I	204550A	NA	Drum Assembly with Rear Support		06-On	1	

GENERAL MOTORS

GM 6T30E 2009-On

BUICK, CHEVY, DAEWOO

KITS

*Add Suffix SK for Super Kit

ILL	Description	Years	Friction Module	Steel Module	Overhaul Kit	Banner Kit	Master Kit
KT	Rebuilding Kit - With Molded Pistons - Generation 1	09-On	210752	210753	210800	210901LS	210901
KT	Rebuilding Kit - Without Molded Pistons - Generation 1	09-On	210752	210753	210800X	210901XLS	210901X

MISCELLANEOUS GASKETS & KIT COMPONENTS

ILL	ALTO No.	REF No.	Description	Spec	Year	Qty	Notes
N I	210817	24231613	Gasket - Converter Housing		09-On	1	
		24237245					
N I	210818	NA	Gasket - Side cover		09-On	1	

FRICTION CLUTCHES

ILL	ALTO No.	REF No.	Description	Spec	Year	Qty	Notes
N I	210700-145	24261227	1-2-3-4 Clutch	.057/1.45	09-On	2	HEG - 36T - OD: 7.576" - SM
N I	210702-157	24261226	2-6 Clutch	.062/1.57	09-On	2	HEG - 30T - OD: 7.717" - SM
N I	210704-157	24261225	3-5-Rev - external spline	.062/1.57	09-On	3	HEG - 30T - ID: 5.273" - SM
N I	210706-160	24261228	4-5-6 Clutch	.063/1.60	09-On	4	HEG - 24T - OD: 4.326" - SB
N I	210708-157	24261224	Low/Reverse Clutch	.062/1.57	09-On	3	HEG - 48T - OD: 7.636" - C24PLNI

STEEL CLUTCHES

ILL	ALTO No.	REF No.	Description	Spec	Year	Qty	Notes
N I	210701-165	24231777	1-2-3-4 Clutch	.065/1.65	09-On	2	11T - ID: 6.822"
N I	210703-246	24256228	2-6 Clutch	.097/2.46	09-On	2	15T - ID: 6.821"
N I	210705-239	24231692	3-5-Reverse - internal spline	.094/2.39	09-On	3	36T - OD: 6.160"
N I	210707-163	24237521	4-5-6 Clutch	.064/1.63	09-On	3	36T - ID: 3.594"
N I	210707-244	24237521	4-5-6 Clutch Apply Plate	.096/2.44	09-On	1	36T - ID: 3.594"
N I	210709-165	24231764	Low/Reverse Clutch	.065/1.65	09-On	3	12T - ID: 6.865"

FILTERS

ILL	ALTO No.	REF No.	Description	Spec	Year	Qty	Notes
N I	210940	24237508	Filter 6T30E		09-On	1	

PISTONS

ILL	ALTO No.	REF No.	Description	Spec	Year	Qty	Notes
N I	210670	NA	Piston Kit - Generation 1		09-On	1	
N I	210300	24253480	Gen 1, 2 Low/Rev, 1-2-3-4 Clutch		09-On	2	
N I	210301	24260376	Piston - Gen 1,2 Low & Rev Clutch		09-On	1	
N I	210302	24231660	Piston - Gen 1 4-5-6 Clutch		09-On	1	
N I	210302A	24261857	Piston - Gen 2 4-5-6 Clutch		09-On	1	
N I	210303	24259059	Piston - Gen 1,2 3-5-Rev Clutch		09-On	1	

GENERAL MOTORS

SATURN TAAT 1991-On

MP6. MP7

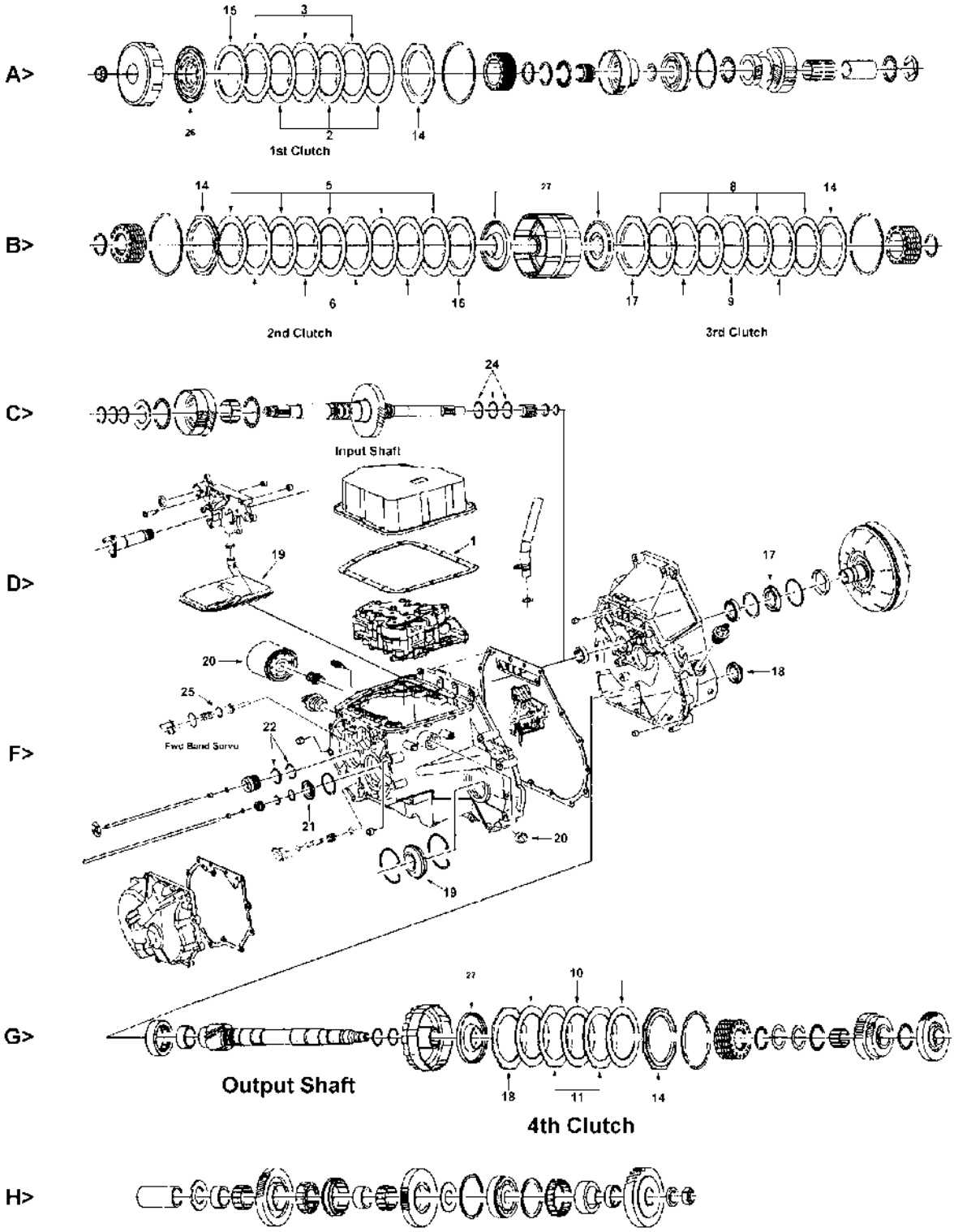

GENERAL MOTORS

SATURN TAAT 1991-On

MP6. MP7

KITS

*Add Suffix SK for Super Kit

ILL	Description	Years	Friction and Steel Module	Overhaul Kit	Banner Kit	Master Kit
KT	Rebuilding Kit	91-On	102750	102800	NA	102901

MISCELLANEOUS GASKETS & KIT COMPONENTS

ILL	ALTO No.	REF No.	Description	Spec	Year	Qty	Notes
1D	102816	21001683	Gasket, VB cover	Cork/Rub	91-96	1	
1D	102816-OE	21003202	Gasket, VB cover	M.Rubber	97-On	1	

FRICTION CLUTCHES

ILL	ALTO No.	REF No.	Description	Spec	Year	Qty	Notes
2A	102700	21002870	1st Clutch (1 sided) - internal spline	.061	91-On	3	HEG - 36T - OD: 4.486" - SM
3A	102701	21002871	1st Clutch (1 sided) - external spline	.061	91-On	2	HEG - 8T - ID: 3.490" - PL
5B	102700	21002870	2nd Clutch (1 sided) - internal spline	.061	91-On	5	HEG - 36T - OD: 4.486" - SM
6B	102701	21002871	2nd Clutch (1 sided) - external spline	.061	91-On	4	HEG - 8T - ID: 3.490" - PL
8B	102700	21002870	3rd Clutch (1 sided) - internal spline	.061	91-On	4	HEG - 36T - OD: 4.486" - SM
9B	102701	21002871	3rd Clutch (1 sided) - external spline	.061	91-On	3	HEG - 8T - ID: 3.490" - PL
10G	102700	21002870	4th Clutch (1 sided) - internal spline	.061	91-On	3	HEG - 36T - OD: 4.486" - SM
11G	102701	21002871	4th Clutch (1 sided) - external spline	.061	91-On	2	HEG - 8T - ID: 3.490" - PL

PRESSURE PLATES

ILL	ALTO No.	REF No.	Description	Spec	Year	Qty	Notes
14	TBA	21001597	All Clutches - Backing		91-98	4	
14	TBA	21003585	All Clutches - Backing		99-On	4	
15A	102703	21002581	1st Clutch (1 sided) - Apply - Ext Spline	.130	91-On	1	HEG - 8T - ID: 3.490" - PL
16B	102703	21003173	2nd Clutch (1 sided) - Apply - Ext Spline	.130	91-On	1	HEG - 8T - ID: 3.490" - PL
17B	102703	21002567	3rd Clutch (1 sided) - Apply - Ext Spline	.130	91-On	1	HEG - 8T - ID: 3.490" - PL
18G	102703	21002567	4th Clutch (1 sided) - Apply - Ext Spline	.130	91-On	1	HEG - 8T - ID: 3.490" - PL

FILTERS

ILL	ALTO No.	REF No.	Description	Spec	Year	Qty	Notes
19D	102940	21002346	Filter - internal		91-On	1	
20D	102942	21002303	Filter - external (spin-on)		91-On	1	

METAL CLAD SEALS

ILL	ALTO No.	REF No.	Description	Spec	Year	Qty	Notes
17D	102400	21002741	Front Pump		91-On	1	
18F	102425	21002873	Right Axle (converter side)		91-On	1	
19F	102426	21002872	Lext Axle (case side)		91-On	1	
20F	102410	21002778	Manual Lever		91-94	1	
20F	102410A	21002853	Manual Lever		94-On	1	
21F	102402	21001662	Output Shaft		91-On	1	

SEALING RINGS

ILL	ALTO No.	REF No.	Description	Spec	Year	Qty	Notes
KT	102600	C-392	Sealing RIng Kit - 6T		91-On	1	
22F	102100	21002684	Input Shaft hub		91-On	2	
24C	102101	21002685	Input Shaft to Stator shaft		91-On	3	
25F	102102	21002298	Forward/Reverse Servo piston		91-On	1	

GENERAL MOTORS

SATURN TAAT 1991-On

MP6. MP7

MISCELLANEOUS

ILL	ALTO No.	REF No.	Description	Spec	Year	Qty	Notes
26A	102330	21001581	Bonded Piston - 1st	M.Rubber	91-On	1	
27	102331	21001582	Bonded Piston - 2nd, 3rd, & 4th	M.Rubber	91-On	3	

GENERAL MOTORS

SATURN VUE 5 Speed 2004-On
MDRA 2WD, MDPA 4WD

KITS

*Add Suffix SK for Super Kit

ILL	Description	Years	Friction Module	Steel Module	Overhaul Kit	Banner Kit	Master Kit
KT	Rebuilding Kit	04-On	172752B	172753B	172806	172907LS	172907

FRICTION CLUTCHES

ILL	ALTO No.	REF No.	Description	Spec	Year	Qty	Notes
N I	172702-200	24227198	Low Clutch	.078/1.98	04-On	5	HEG - 49T - OD: 5.200" - SB
N I	078700A	24227197	Low Hold Clutch	.075/1.9	04-On	3	SAS - 44T - OD: 4.732" - PL
N I	172704A190	24227404	2nd Clutch	.076/1.9	04-On	7	SAS - 28T - OD: 4.694" - SB
N I	172706A190	24229400	3rd Clutch	.076/1.9	04-On	5	SAS - 42T - OD: 5.300" - PL
N I	172708A190	24229399	4th Clutch / 5th Clutch	.076/1.9	04-On	4	SAS - 44T - OD: 5.120" - PL

STEEL CLUTCHES

ILL	ALTO No.	REF No.	Description	Spec	Year	Qty	Notes
N I	146701-160	24227196	Low Clutch	.062/1.6	04-On	5	24T - ID: 4.070"
N I	146701-200	NA	Low Clutch-selective	.079/2.0	04-On	AR	24T - ID: 4.070"
N I	146703-180	24227190	Low Hold Clutch	.071/1.8	04-On	5	6T - ID: 3.677"
N I	172705-180	24227393	2nd Clutch	.071/1.8	04-On	5	24T - ID: 3.390"
N I	172707-200	24227345	3rd Clutch	.079/2.0	04-On	5	20T - ID: 3.464"
		12606977					
N I	172709-200	24227225	4th Clutch / 5th Clutch	.079/2.0	04-On	AR	24T - ID: 3.680"
N I	172709C200	22656-RCK-003	4th Clutch / 5th Clutch	.080/2.03	04-On	8	24T - ID: 3.676"
		12606979					

PRESSURE PLATES

ILL	ALTO No.	REF No.	Description	Spec	Year	Qty	Notes
N I	TBA	24227185	Low Hold Backing Plate		04-On	1	

FILTERS

ILL	ALTO No.	REF No.	Description	Spec	Year	Qty	Notes
N I	172940	25420-RDK-013	Filter		04-On	1	

GENERAL MOTORS

SATURN AF23-5 5 Speed 2003-On

JATCO AW235

KITS

*Add Suffix SK for Super Kit

ILL	Description	Years	Friction Module	Steel Module	Overhaul Kit	Banner Kit	Master Kit
KT	Rebuilding Kit - use with Differential #24226999 & 24228580	03-On	182752	182753	182800	182901LS	182901
KT	Rebuilding Kit - use with Differential #24219881, 24224464 & 24224483	03-On	182752A	182753	182800	182901ALS	182901A

FRICTION CLUTCHES

ILL	ALTO No.	REF No.	Description	Spec	Year	Qty	Notes
N I	159702-175	24220650	Forward	.068/1.73	03-On	4	HEG - 49T - OD: 5.375" - SB
N I	110704A160	24220537	2nd Brake (B2)	.067/1.7	03-On	3	HEG - 40T - OD: 6.302" - SM
N I	110700	24220532	2nd Coast (B1)	.068/1.73	03-On	3	HEG - 34T - OD: 4.258" - SM
N I	110700B150	24228586	Direct (C2) - use with differential# 24226999 & 24228580	.059/1.5	03-On	4	HEG - 34T - OD: 4.254" - SB
N I	110700B175	24220648	Direct (C2) - use with differential# 24219881, 24224464 & 24224483	.068/1.73	03-On	4	HEG - 34T - OD: 4.254" - SB
N I	110700A170	24220778	4-5 Clutch (C1)	.067/1.7	03-On	4	HEG - 34T - OD: 4.482" - SM
N I	110704	24220499	Low/Reverse (B3)	.067/1.7	03-On	4	HEG - 33T - OD: 6.298" - SM
N I	159712-175	24220563	Reverse (B5)	.068/1.73	03-On	6	HEG - 47T - OD: 5.551" - SB

STEEL CLUTCHES

ILL	ALTO No.	REF No.	Description	Spec	Year	Qty	Notes
N I	110703-195	24220649	Forward	.077/1.96	03-On	4	12T - ID: 4.481"
N I	110707B250	24224385	2nd Brake (B2)	.098/2.49	03-On	2	10T - ID: 5.538"
N I	110709	24220531	2nd Coast (B1)	.071/1.8	03-On	3	8T - ID: 3.582"
N I	110701	24220647	Direct (C2)	.071/1.8	03-On	4	12T - ID: 3.582"
N I	110701A180	24220777	4-5 Clutch (C1)	.071/1.8	03-On	4	18T - ID: 3.582"
N I	159705-180	24220500	Low/Reverse (B3)	.071/1.8	03-On	3	12T - ID: 5.657"
N I	159713-180	24220562	Reverse (B5)	.071/1.8	03-On	6	12T - ID: 4.898"

GENERAL MOTORS

GM / ISUZU

JF403E 1990-93

A>

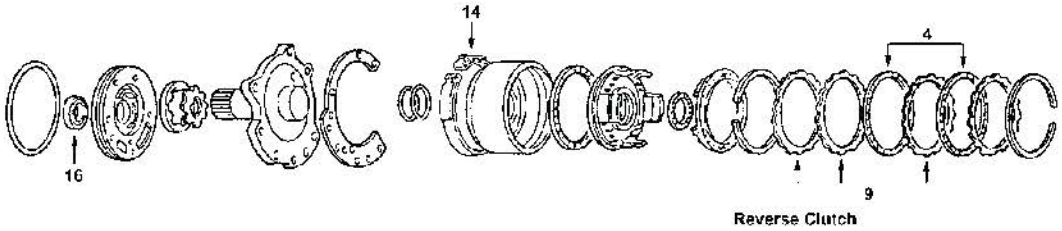

B>

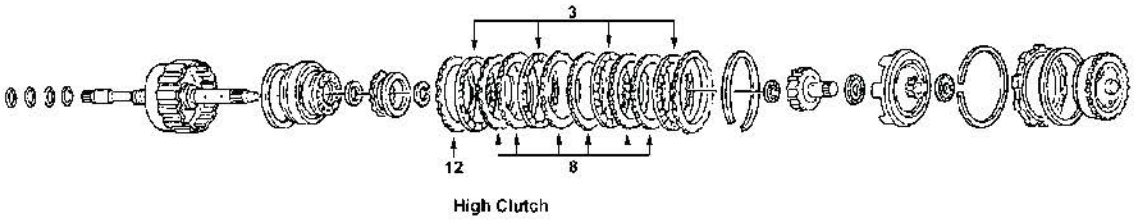

C>

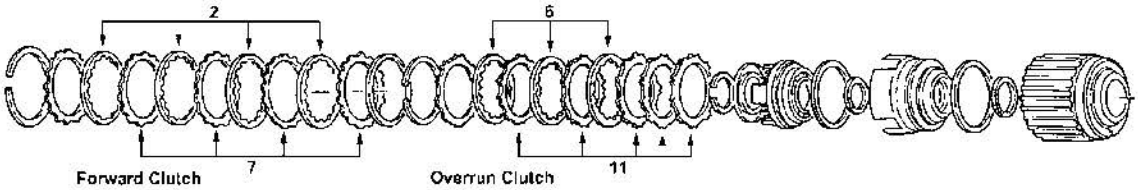

D>

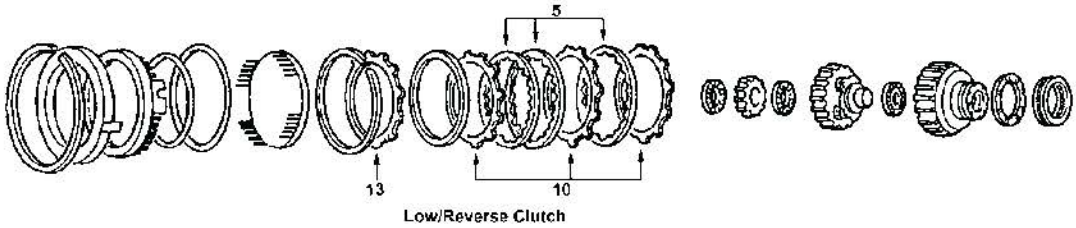

E>

F>

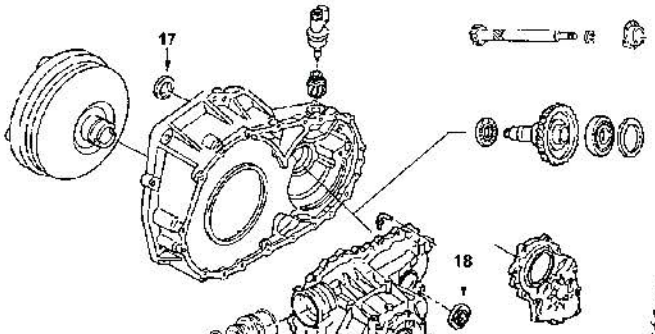

G>

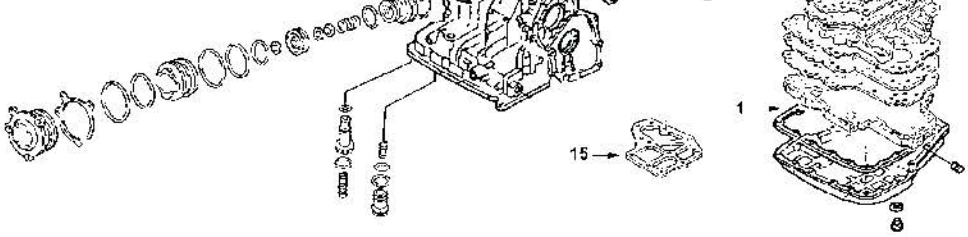

GENERAL MOTORS

GM / ISUZU

JF403E 1990-93

KITS

*Add Suffix SK for Super Kit

ILL	Description	Years	Friction Module	Steel Module	Overhaul Kit	Banner Kit	Master Kit
KT	Rebuilding Kit	90-93	105752	105753	105800	105901LS	105901

MISCELLANEOUS GASKETS & KIT COMPONENTS

ILL	ALTO No.	REF No.	Description	Spec	Year	Qty	Notes
1G	105816	94385731	Gasket, Oil Pan	Cork/Rub	90-93	1	

FRICTION CLUTCHES

ILL	ALTO No.	REF No.	Description	Spec	Year	Qty	Notes
2C	105700	94385824	Forward	.063/1.6	90-93	4	HEG - 32T - OD: 5.424" - PL
3B	105702A	94385851	High	.063/1.6	90-93	3	HEG - 20T - OD: 4.416" - PL
4A	105704	97066813	Reverse	.063/1.6	90-93	2	HEG - 28T - OD: 5.480" - PL
5D	105706	97069350	Low / Reverse	.063/1.6	90-93	7-8	HEG - 32T - OD: 6.455" - PL
6C	105708	94385834	Overrun	.063/1.6	90-93	3	HEG - 20T - OD: 4.940" - PL

STEEL CLUTCHES

ILL	ALTO No.	REF No.	Description	Spec	Year	Qty	Notes
7C	105701	94385825	Forward	.071/1.8	90-93	6	32T - ID: 4.928"
8B	105703A	94385852	High	.087/2.2	90-91	4	28T - ID: 4.686"
8B	105703A	94385852	High	.087/2.2	92-93	1	28T - ID: 4.686"
8B	105703A200	97043655	High	.078/2.0	92-93	6	28T - ID: 4.686"
8B	105703A140	NA	High - selective	.055/1.4	90-93	AR	28T - ID: 4.686"
9A	105705	94385872	Reverse	.071/1.8	90-93	2	30T - ID: 4.957"
10D	105707A	94385691	Low / Reverse (wide Tooth)	.071/1.8	90-93	6	10T - ID: 5.900"
11C	105709	94387815	Overrun	.063/1.6	90-93	3	8T - ID: 4.447"

PRESSURE PLATES

ILL	ALTO No.	REF No.	Description	Spec	Year	Qty	Notes
12B	105761-310	97043657	High - backing	.122/3.1	90-93	AR	
12B	105761-330	97043665	High - backing	.130/3.3	90-93	AR	
12B	105761-350	97043659	High - backing	.138/3.5	90-93	AR	
12B	105761-370	97048619	High - backing	.146/3.7	90-93	AR	
12B	105761-400	94385855	High - backing	.157/4.0	90-93	AR	
13D	105707A200	94385694	Low / Reverse - apply	.078/2.0	90-93	AR	
13D	105707A220	94385695	Low / Reverse - apply	.086/2.2	90-93	AR	
13D	105707A240	94385696	Low / Reverse - apply	.095/2.4	90-93	AR	
13D	105707A260	94385697	Low / Reverse - apply	.102/2.6	90-93	AR	
13D	105707A280	94385698	Low / Reverse - apply	.110/2.8	90-93	AR	
13D	105707A300	94385699	Low / Reverse - apply	.118/3.0	90-93	AR	
13D	105707A320	94385700	Low / Reverse - apply	.126/3.2	90-93	AR	
13D	105707A340	94385701	Low / Reverse - apply	.134/3.4	90-93	AR	

BANDS

ILL	ALTO No.	REF No.	Description	Spec	Year	Qty	Notes
14A	105950	94385793	Brake	Tan	90-93	1	

FILTERS

ILL	ALTO No.	REF No.	Description	Spec	Year	Qty	Notes
15G	105940	94385937	Filter		90-93	1	

GENERAL MOTORS

GM / ISUZU

JF403E 1990-93

METAL CLAD SEALS

ILL	ALTO No.	REF No.	Description	Spec	Year	Qty	Notes
16A	107400	94385707	Front Pump		90-93	1	
17F	048401	97070182	Axle, Right & Left	2.157	90-93	1	

SEALING RINGS

ILL	ALTO No.	REF No.	Description	Spec	Year	Qty	Notes
KT	105600	E512	Sealing Ring Kit - 2M / 10T		90-93	1	

GENERAL MOTORS

GM 2ML70 RWD 2007-On

2-Mode Hybrid

KITS

*Add Suffix SK for Super Kit

ILL	Description	Years	Friction Module	Steel Module	Overhaul Kit	Banner Kit	Master Kit
KT	Rebuilding Kit - with Molded Pistons	07-On	205752	205753	205800	205901LS	205901
KT	Rebuilding Kit - without Molded Pistons	07-On	205752	205753	205800X	205901XLS	205901X

FRICTION CLUTCHES

ILL	ALTO No.	REF No.	Description	Spec	Year	Qty	Notes
N I	205700-200	NA	1-3 Clutch	.080/2.03	07-On	4	HEG - 96T - OD: 5.468" - SB
N I	205702-200	NA	4th Clutch	.081/2.05	07-On	2	HEG - 36T - OD: 6.491" - SB
N I	205704-200	NA	Low, 1-2 Clutch	.079/2.0	07-On	4	HEG - 140T - SB
N I	205706-200	NA	Direct, 2-3-4 Clutch	.079/2.0	07-On	4	HEG - 52T - OD: 6.665" - SB

STEEL CLUTCHES

ILL	ALTO No.	REF No.	Description	Spec	Year	Qty	Notes
N I	205701-220	NA	1-3 Clutch	.086/2.18	07-On	4	36T - ID: 4.979"
N I	205703-220	NA	4th Clutch	.086/2.18	07-On	2	36T - ID: 6.029"
N I	205705-220	NA	Low, 1-2 Clutch	.087/2.2	07-On	4	24T - ID: 7.087"
N I	205707-220	NA	Direct, 2-3-4 Clutch	.087/2.2	07-On	4	50T - ID: 4.310"

FILTERS

ILL	ALTO No.	REF No.	Description	Spec	Year	Qty	Notes
N I	205940	NA	Filter		07-On	1	
N I	205942	NA	Filter, Aux. Pump		07-On	1	

MOLDED PISTONS

ILL	ALTO No.	REF No.	Description	Spec	Year	Qty	Notes
N I	205670	NA	Piston Kit		07-On	1	Contains 6 Pistons

ALLISON

AT540, 542, 543, 545, 1545, VS

1970-On

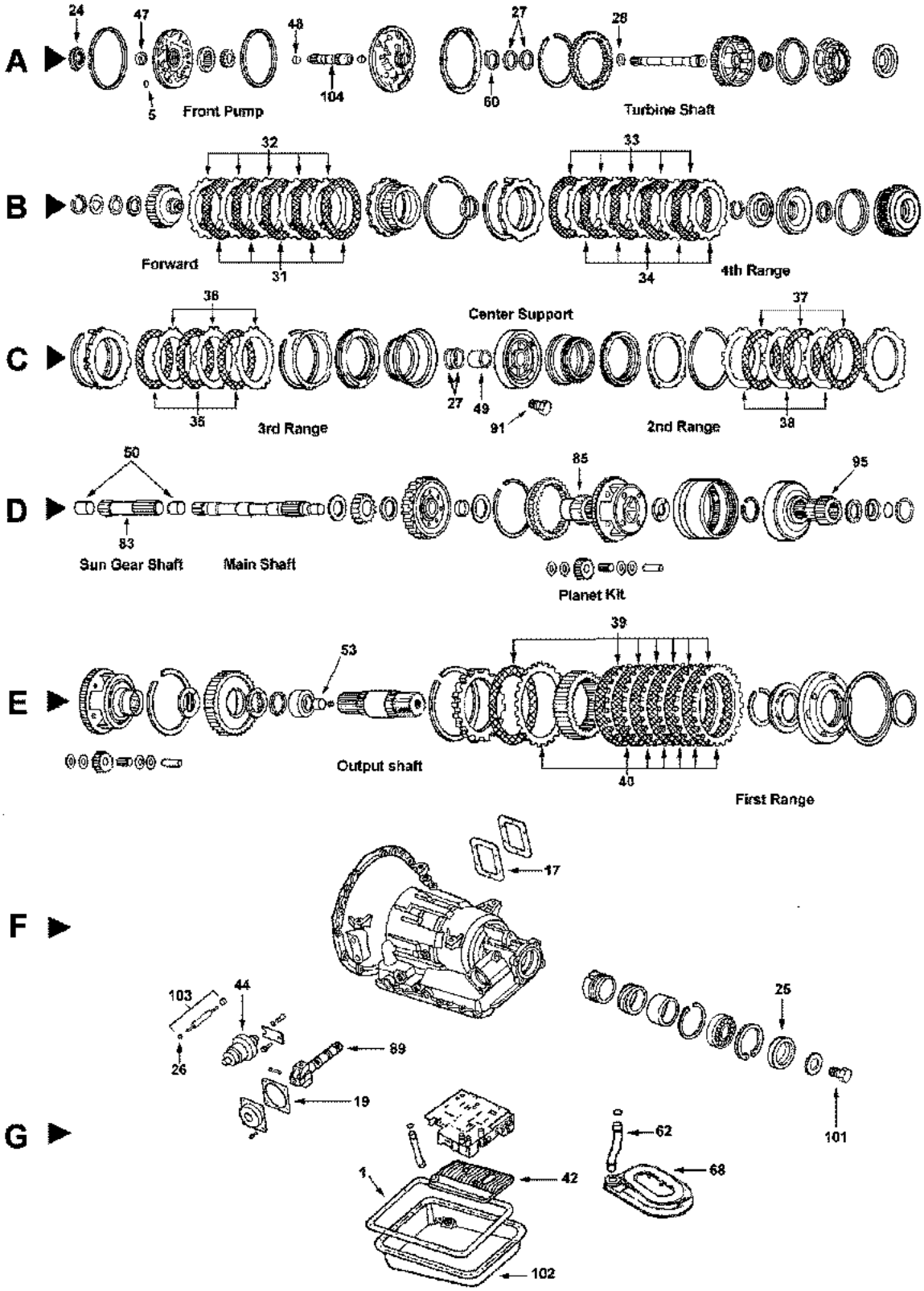

ALLISON

AT540, 542, 543, 545, 1545, VS
1970-On

KITS

*Add Suffix SK for Super Kit

ILL	Description	Years	Friction Module	Steel Module	Overhaul Kit	Banner Kit	Master Kit
KT	Rebuilding Kit - AT540, 542, 545	70-On	055752C	055753B	055800	055901LS	055901 *
	* Note: for Super Kit AT540, 542 70-On order Alto# 055901SK	70-On					
	* Note: for Super Kit AT545 70-91 order Alto# 055901SK	70-91					
	* Note: for Super Kit AT545 92-On order Alto# 055901BSK	92-On					
KT	Rebuilding Kit - AT540, 542, 545 with OE Style Gasket Set	70-On	055752C	055753B	055800A	055901ALS	055901A *
	* Note: for Super Kit (OE Style Gasket) AT540, 542 70-On order Alto# 055901ASK	70-On					
	* Note: for Super Kit (OE Style Gasket) AT545 70-91 order Alto# 055901ASK	70-91					
	* Note: for Super Kit (OE Style Gasket) AT545 92-On order Alto# 055901CSK	92-On					

MISCELLANEOUS GASKETS & KIT COMPONENTS

ILL	ALTO No.	REF No.	Description	Spec	Year	Qty	Notes
N I	055645	K11900-2	Front Pump Seal Kit - contains Pump Gasket, Pump Seal & Pump Washers		70-On	1	
1G	055816	29501160	Gasket, oil pan	Cork/Rub	70-On	1	
1G	055815A	29501160	Gasket, oil pan - Armstrong (Solid)	Fiber	70-On	1	
1G	055815	29501160	Gasket, oil pan - Armstrong	Fiber	70-On	1	
17F	055006	23016683	Gasket, PTO cover	Cork/Rub	70-On	1	
17F	055006A	23016683	Gasket, PTO cover - Armstrong	Fiber	70-On	1	
19G	055007	23018625	Gasket, Governor cover	Cork/Rub	70-On	1	
19G	055007A	23018625	Gasket, Governor cover - Armstrong	Fiber	70-On	1	
3A	031050	23016559	Lathe Cut, Front pump body		70-On	1	
4B	031051	8623101	Lip Seal, Forward & 4th cl outer		70-On	1	
5B	031054	8623102	Lip Seal, Forward & 4th cl inner		70-On	1	

FRICTION CLUTCHES

ILL	ALTO No.	REF No.	Description	Spec	Year	Qty	Notes
31B	055700-200	23042197	Forward	.080/2.03	70-On	5	Crb - 42T - OD: 5.89"
40E	055702B246	23042198	1st Range	.097/2.46	70-On	7	G3BK - 60T - OD: 8.15"
37C	055724A255	23042199	2nd Range	.100/2.55	70-On	3-4	G3BK - 80T - OD: 9.100"
35C	055724A255	23042199	3rd Range	.100/2.55	70-On	3-4	G3BK - 80T - OD: 9.100"
35/37C	055704C250	29537887	2nd & 3rd Range - Hardened spline	.100/2.55	70-On	6-8	G3BK - 80T - OD: 9.100"
33B	055700-200	23042197	4th Range	.080/2.03	70-On	5	Crb - 42T - OD: 5.89"
N I	055710	NA	VS series	.107/2.70	70-On	AR	HEG - 59T - OD: 8.38"

STEEL CLUTCHES

ILL	ALTO No.	REF No.	Description	Spec	Year	Qty	Notes
32B	055701-230	6836518	Forward	.091/2.30	70-On	4-5	12T - ID: 4.6"
		29530330					
N I	055701W250	29505875	Forward - wave	.098/2.55	92-On	1	12T - ID: 4.6"
40E	055703	6831705	1st Range	.098/2.55	70-On	7	30T - ID: 6.5"
38C	055705	29515399	2nd Range	.098/2.55	70-On	3	9T - ID: 7.25"
36C	055705	29515399	3rd Range	.098/2.55	70-On	3	9T - ID: 7.25"
36C	055705A255	NA	3rd Range CaseSaver™ steel	.098/2.55	70-On	3	9T - ID: 7.25"
34B	055701-230	6836518	4th Range	.091/2.30	70-On	5-6	12T - ID: 4.6"
		29530330					

ALLISON

AT540, 542, 543, 545, 1545, VS
1970-On

STEEL CLUTCHES

ILL	ALTO No.	REF No.	Description	Spec	Year	Qty	Notes
N I	055711	NA	VS series	.089/2.25	ALL	AR	15T - ID: 6.15"

OEI® Original Equipment Improvements

ILL	ALTO No.	REF No.	Description	Spec	Year	Qty	Notes
KT	055758	NA	CaseSaver™ 3rd Range		70-On	1	

FILTER KITS

ILL	ALTO No.	REF No.	Description	Spec	Year	Qty	Notes
KT	FK031946	6884270	Filter Kit, thin Stainless Steel Filter with OE Style Gsk		70-On	1	
KT	FK031946A	6884270	Filter Kit, thin Stainless Steel Filter with Cork Gsk		70-On	1	
		29540976					
KT	FK056940A	23019201	Filter Kit, thick filter OE Style Gsk without tube		70-On	1	Aftermarket style
KT	FK056940B	23019201	Filter Kit, thick filter Cork Gsk without tube		70-On	1	Aftermarket style
KT	FKF153A	29502302	Filter Kit, thick filter OE Style Gsk without tube		70-On	1	OE style
KT	FKF153B	29502302	Filter Kit, thick filter Cork Gsk without tube		70-On	1	OE style

FILTERS

ILL	ALTO No.	REF No.	Description	Spec	Year	Qty	Notes
42G	031946	29502295	Filter - thin with stainless steel screen		70-On	1	
		29503617					
42G	031948A	6259423	Filter - Brass		70-On	1	
68G	056940A	29528474	Filter - thick with Grommet, without filter tube		70-On	1	Aftermarket style
68G	F153A	6883044	Filter - thick without filter tube		70-On	1	OE style
			Note: To convert AT540 to AT545 requires filter tube and thick filter				

METAL CLAD SEALS

ILL	ALTO No.	REF No.	Description	Spec	Year	Qty	Notes
24A	055400	23015975	Front Pump	Vamac®	70-On	1	
25F	055405	6778050	Extension Housing		70-On	1	
		29536379					
26G	032410C	23010610	Manual Lever		70-On	1	

SEALING RINGS

ILL	ALTO No.	REF No.	Description	Spec	Year	Qty	Notes
KT	055600	NL	Sealing Ring Kit (with Teflon)		70-On	1	
KT	055600A	NL	Sealing Ring Kit (with Vespelr)		70-On	1	
27A	055100	23046598	Sealing Ring, Front pump	Teflon	70-On	2	
27A	055100A	23046598	Sealing Ring, Front pump	Vespel®	70-On	2	
28A	055101	8616052	Sealing Ring, Input Shaft	Metal	70-On	1	
27C	055100	23046598	Sealing Ring, Center Support	Teflon	70-On	2	
27C	055100A	23046598	Sealing Ring, Center Support	Vespel®	70-On	2	

MODULATORS

ILL	ALTO No.	REF No.	Description	Spec	Year	Qty	Notes
44F	055502	3039092	Modulator - Dual Diaphragm		70-On	1	with O Ring

ALLISON

AT540, 542, 543, 545, 1545, VS
1970-On

BUSHINGS

ILL	ALTO No.	REF No.	Description	Spec	Year	Qty	Notes
KT	055625	NL	Bushing Kit AT540, AT542		70-On	1	
KT	055625	NL	Bushing Kit AT545 early		70-91	1	
KT	055625A	NL	Bushing Kit AT545 late		92-On	1	
47A	055200	23018806	Front Pump	Bronze	70-On	1	
48A	031201	6836272	Stator Shaft - Front	1.125 OD	70-On	1	
49C	055205	23012990	Center Support	1.54 OD	70-On	1	
49C	055205A	29506468	Center Support (AT545 Only)	1.60 OD	92-On	1	
50D	031201	6836272	Sun Gear Shaft Front	1.125 OD	70-On	1	
50D	055201	29522949	Sun Gear Shaft Front (AT545 only)	1.1910 OD	92-On	1	
50D	031201	6836272	Sun Gear Shaft Rear	1.125 OD	70-On	1	
50D	055201	29522949	Sun Gear Shaft Rear (AT545 only)	1.1910 OD	92-On	1	
53E	055208	8622947	Output Shaft	.775 OD	70-On	1	
53E	055208	8622947	Output Shaft (AT545 Only)	.775 OD	92-On	1	Up to Serial# 3210775437
53E	055208A	29502231	Output Shaft (AT545 Only)	.815 OD	92-On	1	Serial# 3210775438 & Up
2D	055206	23045072	Front Planetary Carrier	1.88 OD	70-On	1	

WASHERS

ILL	ALTO No.	REF No.	Description	Spec	Year	Qty	Notes
60A	055150-147	6831620	TW, Front Pump - "0"	.058	70-On	AR	
60A	055150-188	6831621	TW, Front Pump - "1"	.074	70-On	AR	
60A	055150-230	6831622	TW, Front Pump - "2"	.091	70-On	AR	
60A	055150-272	6831623	TW, Front Pump - "3"	.107	70-On	AR	
60A	055150-312	6831624	TW, Front Pump - "4"	.123	70-On	AR	
60A	055150-355	6831625	TW, Front Pump - "5"	.140	70-On	AR	
N I	055152-015	6837429	TW, Turbine Brg. shim - Gold	.015	70-On	AR	AT543
N I	055152-030	6837430	TW, Turbine Brg. shim - Chrome	.030	70-On	AR	AT543
N I	055152-042	6837431	TW, Turbine Brg. shim - Plain	.042	70-On	AR	AT543
N I	055152-060	6837432	TW, Turbine Brg. shim - Black	.060	70-On	AR	AT543
N I	055152-075	6837433	TW, Turbine Brg. shim - Copper	.075	70-On	AR	AT543
N I	031157	23013454	Washer, 4th clutch driving hub		70-On	AR	

SHAFTS

ILL	ALTO No.	REF No.	Description	Spec	Year	Qty	Notes
15D	055379	23013474	Shaft - Main		70-On	1	
15D	055379PS	29524363	Shaft - Main (heavy duty)		70-On	1	
16A	055380	29525516	Shaft - Turbine		70-On	1	

HARD PARTS

ILL	ALTO No.	REF No.	Description	Spec	Year	Qty	Notes
N I	055354A	6831679	Planetary Repair Pin		70-On	4	
N I	055354B	29501499	Planetary Repair Needle Roller		70-On	76	
N I	055354C	6831680	Planetary Repair Washer - steel		70-On	8	
N I	055354D	6839376	Planetary Repair Washer - bronze		70-On	8	
N I	TBA	29541833	Torque Converter Kit - AT545		70-On	1	
N I	TBA	29541338	Pump Body and Gear - AT545		70-On	1	
N I	TBA	29503064	Governor Drive Gear - AT545		70-On	1	
KT	TBA	6883938	Governor gear kit		70-On	1	
89G	TBA	6881466	Governor assembly - ID no 460		70-On	1	
89G	055351	6885570	Governor assembly - ID no 461		70-On	1	

ALLISON

AT540, 542, 543, 545, 1545, VS
1970-On

HARD PARTS

ILL	ALTO No.	REF No.	Description	Spec	Year	Qty	Notes
89G	055352	6885571	Governor assembly - ID no 462		70-On	1	
85D	TBA	6835936	Sun Gear - Center		70-On	1	
95D	TBA	6884902	Sun Gear - Rear		70-On	1	
83D	TBA	6835937	Sun Gear Shaft		70-On	1	
102 G	TBA	23045906	Deep oil pan - ribbed with heater hole		70-On	1	
102 G	TBA	29501358	Deep oil pan - dual fill tube locations		70-On	1	

MISCELLANEOUS

ILL	ALTO No.	REF No.	Description	Spec	Year	Qty	Notes
62G	056565	6883046	Oil Filter tube		70-On	1	
N I	055557	23010915	Torque Converter bolt - Metric	M8	70-On	AR	
N I	055558	6885391	Torque Converter bolt - English	3/8" - 16	70-On	AR	
5A	055003	29512113	Washer, Front pump bolts		70-On	17	
N I	055552	3909063	Washer (Lock), Center support retainer		70-On	8	
91C	055554	6836587	Bolt, Center support to case		70-On	1	
101F	056557	29510838	Bolt, Output shaft		70-On	1	
KT	TBA	NA	Manual Control lever repair kit		70-On	1	
N I	TBA	9436642	Plug for heater hole in pan		70-On	1	

ALLISON

MT640, 643, 644 - 4 Speed
MT650, 653, 654 - 5 Speed

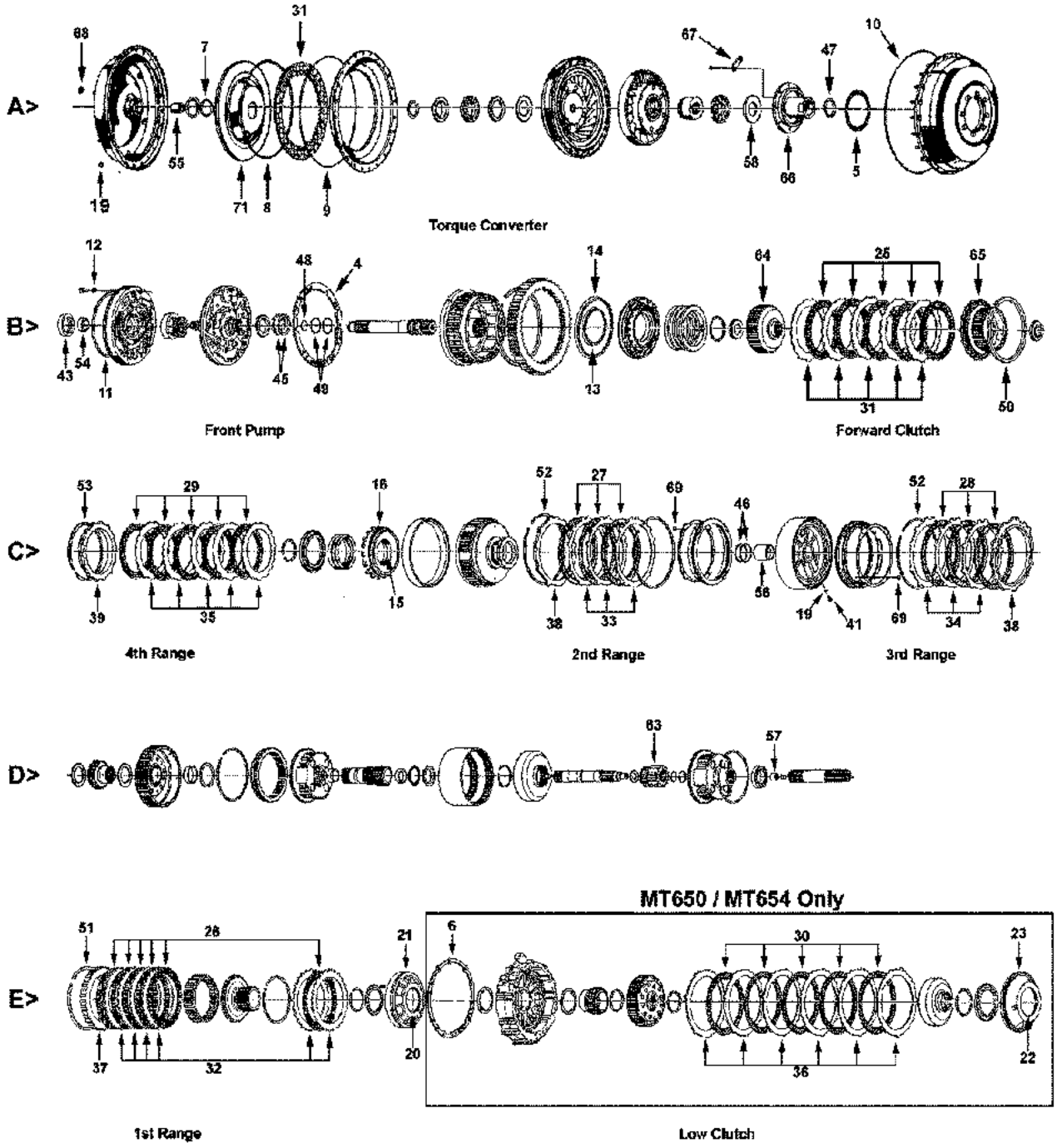

ALLISON

MT640, 643, 644 - 4 Speed
MT650, 653, 654 - 5 Speed

F>

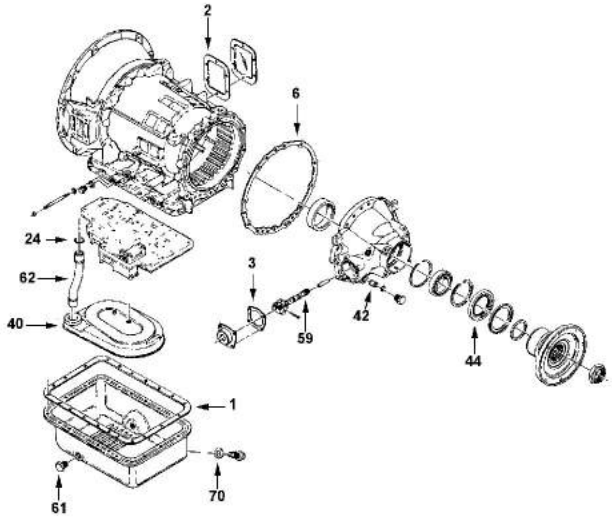

KITS ***Add Suffix SK for Super Kit**

ILL	Description	Years	Friction Module	Steel Module	Overhaul Kit	Banner Kit	Master Kit
KT	Rebuilding Kit - MT640, 643, 650, 653 (contains 1 front pump seal #056401)	72-On	056752D	056753	056800	056901LS	056901
KT	Rebuilding Kit - MT640, 643, 650, 653 (contains 2 front pump seals #056400A & 056401)	72-On	056752D	056753	056800B	056901BLS	056901B
KT	Rebuilding Kit - MT640, 643, 650, 653 with OE Style Gasket Set (contains 2 front pump seals #056400A & 056401)	72-On	056752D	056753	056800A	056901ALS	056901A
KT	Rebuilding Kit - MT644, 654 (Phase 1)	72-On	056752E	056753A	056802	056903LS	056903
KT	Rebuilding Kit - MT654 (Phase 2)	72-On	056752F	056753B	056802	056903ALS	056903A

MISCELLANEOUS GASKETS & KIT COMPONENTS

ILL	ALTO No.	REF No.	Description	Spec	Year	Qty	Notes
1F	055816	29501160	Gasket, Oil pan	Cork/Rub	72-On	1	
1F	055815A	29501160	Gasket, Oil pan - Armstrong (Solid)	Fiber	72-On	1	
1F	055815	29501160	Gasket, Oil pan - Armstrong	Fiber	72-On	1	
2F	055006	29501161	Gasket, PTO cover	Cork/Rub	72-On	1	
2F	055006A	29501161	Gasket, PTO cover - Armstrong	Fiber	72-On	1	
3F	055007	23018625	Gasket, Governor cover	Cork/Rub	72-On	1	
3F	055007A	23018625	Gasket, Governor cover - Armstrong	Fiber	72-On	1	
4B	056001	23046344	Gasket, Front Pump		72-On	1	
N I	056008	6884872	Gasket, Lube valve adapter		72-On	1	
5A	055008	6759971	Gasket, TC Hub - except MT644/654		72-On	1	
5A	056005	6771366	Gasket, TC Hub - MT644/654		72-On	1	
6EF	056007	23045099	Gasket, Adapter to case		72-On	2	
7A	010136B	6770820	O Ring, Lockup clutch - inner	Poly	72-On	1	
N I	056835	NA	Kit, Torque Converter Seal MT643		72-On	1	contains 5 seals
8A	056061	6758036	Lathe Cut, Lockup clutch - outer		72-On	1	
9A	055055	23016564	Lathe Cut, Lockup clutch backing plate		72-On	1	
10A	055055	23016564	Lathe Cut, TC pump cover - except MT644/654		72-On	1	
11B	056050	23016347	Lathe Cut, Front pump to case		72-On	1	
12B	056006	6834908	Washer, Front pump bolt		72-On	12	
KT	001015	NA	Kit, Lipseal		72-On	1	contains 12 Lipseals

ALLISON

MT640, 643, 644 - 4 Speed
MT650, 653, 654 - 5 Speed

MISCELLANEOUS GASKETS & KIT COMPONENTS

ILL	ALTO No.	REF No.	Description	Spec	Year	Qty	Notes
13B	031052	23015880	Lipseal, Forward clutch - inner		72-On	1	
14B	056058	6833981	Lipseal, Forward clutch - outer		72-On	1	
15C	031052	23015880	Lipseal, 4th Clutch - inner		72-On	1	
16C	056058	6833981	Lipseal, 4th Clutch - outer		72-On	1	
17C	056055	23011471	Lipseal, 2nd & 3rd Clutch - inner		72-On	1	
18C	056056	6883035	Lipseal, 2nd & 3rd Clutch - outer		72-On	1	
20E	056053	6883031	Lipseal, 1st Clutch - inner		72-On	1	
21E	056054	6883033	Lipseal, 1st Clutch - outer		72-On	1	
22E	056053	6883031	Lipseal, Low Clutch - inner		72-On	1	
23E	056056	6883035	Lipseal, Low Clutch - outer		72-On	1	
24F	010216B	6762127	O Ring, Filter tube		72-On	1	
N I	010115B	8658110	O Ring, Modulator		72-On	1	
N I	010116B	6882689	O Ring, Governor feed filter		72-On	1	
68A	056552A	23014462	Nut, Flexplate bolt		72-On	6	
19A	056566	190139	Nut, Torque Converter		72-On	24	

FRICTION CLUTCHES

ILL	ALTO No.	REF No.	Description	Spec	Year	Qty	Notes
25B	056700C255	23042200	Forward Clutch	.100	72-On	5-6	G3BK - 30T - OD:7.182" - PLI
26E	055704C250	29537887	1st Range - Hardened spline	.100	72-On	6	G3BK - 80T - OD:9.119" - PLI
26E	055724A255	23042199	1st Range	.100	72-On	6	G3BK - 80T - OD:9.119" - PLI
27C	056702C325	6835720	2nd Range	.128	72-On	3-4	G3BK - 50T- OD:10.841" - PLI
		23042201					
28C	056702C325	6835720	3rd Range	.128	72-On	3	G3BK - 50T- OD:10.841" - PLI
		23042201					
29C	056700C255	23042200	4th Range	.100	72-On	4-5	G3BK - 30T - OD:7.182" - PLI
30E	056702C325	6835720	Low Range except phase 2	.128	72-On	5-6	G3BK - 50T -OD:10.841" - PLI
		23042201					
30E	056722B315	23042210	Low Range phase 2 only	.125	72-On	7	G3BK - 71T -OD:10.481" - PLI
31A	056712	23048511	Lockup Clutch (TC) - MT644/654	.205	72-On	1	G3BK - 73T- OD:14.600" - PLI
31A	056712A	23046108	Lockup Clutch (TC) - except MT644/654	.186	72-On	1	G3BK - 56T - OD:12.389" - PLI

STEEL CLUTCHES

ILL	ALTO No.	REF No.	Description	Spec	Year	Qty	Notes
31B	056701	23016610	Forward	.100	72-On	4-6	18T - ID: 5.530"
32E	056703	23016606	1st Range	.100	72-On	6	36T - ID: 7.333"
33C	056705	23016608	2nd Range	.100	72-On	3-4	11T - ID: 8.825"
34C	056705	23016608	3rd Range	.100	72-On	3	11T - ID: 8.825"
35C	056701	23016610	4th Range	.100	72-On	5-6	18T - ID: 5.530"
36E	056705	23016608	Low Range except Phase 2	.100	72-On	6-7	11T - ID: 8.825"
36E	056705A	23045054	Low Range Phase 2 only	.100	72-On	8	11T - ID: 9.198"

PRESSURE PLATES

ILL	ALTO No.	REF No.	Description	Spec	Year	Qty	Notes
37E	TBA	23046721	1st Range backing (#5)	.676	72-On	1	
38C	TBA	23046745	2nd & 3rd Range backing - selective (#7)	.482	72-On	1	
38C	TBA	23046746	2nd & 3rd Range backing - selective (#8)	.455	72-On	1	
38C	TBA	23046718	2nd & 3rd Range backing - selective (#9)	.468	72-On	1	

ALLISON

MT640, 643, 644 - 4 Speed
MT650, 653, 654 - 5 Speed

PRESSURE PLATES

ILL	ALTO No.	REF No.	Description	Spec	Year	Qty	Notes
39C	056763A	29516333	4th Range backing		72-On	1	

FILTER KITS

ILL	ALTO No.	REF No.	Description	Spec	Year	Qty	Notes
KT	FK056940A	NA	Filter Kit - thick filter OE Style Gsk without tube		72-On	1	
KT	FK056940B	NA	Filter Kit - thick filter Cork Gsk without tube		72-On	1	
KT	FKF153A	NA	Filter Kit - thick filter OE Style Gsk without tube - SPX		72-On	1	
KT	FKF153B	29502302	Filter Kit, thick filter Cork Gsk without tube		72-On	1	OE style
KT	FK056940C	NA	Filter Kit - thick filter for Shallow Pan with tube - OE Style Gsk		72-On	1	
KT	FK056940E	29538491	Filter Kit - thick filter for Deep Pan with tube - OE Style Gsk		72-On	1	

FILTERS

ILL	ALTO No.	REF No.	Description	Spec	Year	Qty	Notes
40F	056940A	29538474	Filter without tube - AFTMKT		72-On	1	
40F	F153A	6883044	Filter without tube - SPX		72-On	1	
N I	056942	NA	Filter - Deep pan with pipe		72-On	1	
N I	056942X	NL	Filter - Shallow pan with pipe		72-On	1	
41C	056560	23010654	Screen - Center Support		72-On	1	
42F	055553	8624471	Screen - Governor oil (early)		72-On	1	Thimble type
42F	056559	6882687	Screen - Governor oil (late)		72-On	1	Barrel type

METAL CLAD SEALS

ILL	ALTO No.	REF No.	Description	Spec	Year	Qty	Notes
43B	056400A	23016643	Front Pump	3.885	72-On	1	
43B	056401	23045556	Front Pump	3.378	72-On	1	
43B	056402	6837228	Front Pump	3.362	72-On	1	
44F	055405	6778050	Extension Housing	3.632	72-On	1	MT640/643/644
44F	056405	6773311	Extension Housing	4.758	72-On	1	MT650/653/654

SEALING RINGS

ILL	ALTO No.	REF No.	Description	Spec	Year	Qty	Notes
KT	056600	NA	Sealing RIng Kit - 4T/4M		72-On	1	AFTMKT
KT	056600A	NA	Sealing Ring Kit - 4V/4M		72-On	1	OE (Vespel®)
KT	056100A	23014632	Sealing Ring Kit - Front Pump/Center Support 4V		72-On	1	OE (Vespel)
45B	056100	NA	Front Pump stator	Teflon	72-On	2	
46C	TBA	23015617	Front Pump Stator	Vespel®	72-On	2	Not available separate
46C	056100	NA	Center Support	Teflon	72-On	2	
46C	TBA	23015617	Center Support	Vespel®	72-On	2	Not available separate
47A	056101	6830187	Torque Converter Hub	Metal	72-On	1	
48B	056102	6839163	Input Shaft	Metal	72-On	1	
49B	056103	6833999	Input Shaft to Forward drum	Metal	72-On	2	

BUSHINGS

ILL	ALTO No.	REF No.	Description	Spec	Year	Qty	Notes
KT	056625	NA	Bushing Kit		72-On	1	with early front pump
KT	056625A	NA	Bushing Kit - MT640, 650, 653		72-On	1	with OEM front pump
KT	056625B	NA	Bushing Kit - MT644, 654		72-On	1	with OEM front pump

ALLISON

MT640, 643, 644 - 4 Speed
MT650, 653, 654 - 5 Speed

BUSHINGS

ILL	ALTO No.	REF No.	Description	Spec	Year	Qty	Notes
KT	056630	NA	Bushing Kit - MT640 Series		72-On	1	without front pump
54B	056200	23046153	Front Pump body - MT640, 650, 653		72-On	1	
		29527101					
54B	056200A	23046152	Front Pump body - MT644, 654		72-On	1	
56C	056201	23011924	Center Support		72-On	1	
N I	056202	29516211	Sun Gear		72-On	2	
55A	056203	6756782	Torque Converter cover		72-On	1	
N I	056204	6835385	Front Planetary Cover		72-On	1	
57D	056205	23016859	Output Shaft		72-On	1	
N I	056207	6835398	Low Planetary		72-On	1	

WASHERS

ILL	ALTO No.	REF No.	Description	Spec	Year	Qty	Notes
N I	056635	NA	Washer Kit (4)		72-On	1	
N I	056151	6839364	Washer - Front Planetary Sun Gear		72-On	AR	Bronze
N I	056152	6835386	Washer		72-On	AR	Bronze
N I	056153	6834389	Washer		72-On	AR	Bronze 2.191" ID
N I	056154	9432512	Washer race roller bearing		72-On	AR	Bronze
58A	055152-015	6837429	Spacer, TC turbine	.015	72-On	AR	Gold
58A	055152-030	6837430	Spacer, TC turbine	.030	72-On	AR	Silver
58A	055152-042	6837431	Spacer, TC turbine	.042	72-On	AR	Plain
58A	055152-060	6837432	Spacer, TC turbine	.060	72-On	AR	Black
58A	055152-075	6837433	Spacer, TC turbine	.075	72-On	AR	Copper

SHAFTS

ILL	ALTO No.	REF No.	Description	Spec	Year	Qty	Notes
N I	056379	23013456	Shaft - Main 640, 643, 650, 653		72-On	1	
N I	056379A	23017699	Shaft - Main 644, 647, 654		72-On	1	
N I	056380	23012785	Shaft Turbine Alli MT643		72-On	1	

HARD PARTS

ILL	ALTO No.	REF No.	Description	Spec	Year	Qty	Notes
59F	055351	6885570	Governor Assembly - ID # 461		72-On	1	
59F	055352	6885571	Governor Assembly - ID # 462		72-On	1	
59F	056302	6885572	Governor Assembly - ID # 463		72-On	1	
59F	056303	6881471	Governor Assembly - ID # 465		72-On	1	
59F	056304	6882737	Governor Assembly - ID # 738		72-On	1	Brass
59F	056305	6882736	Governor Assembly - ID # 739		72-On	1	Brass
N I	055354A	6831679	Planetary Repair Pin		72-On	4	
N I	055354B	29501499	Planetary Repair Needle Roller		72-On	76	
N I	055354C	6831680	Planetary Repair Washer - steel		72-On	8	
N I	055354D	6839376	Planetary Repair Washer - bronze		72-On	8	
60F	056350	23045906	Deep oil pan - ribbed with heater hole		72-On	1	
60F	056350A	29501358	Deep oil pan - dual fill tube locations		72-On	1	
63D	056352	6883901	Sun Gear - rear planetary (except MT653)		72-On	1	
N I	TBA	29516215	Sun Gear - shaft assembly		72-On	1	
64B	056353	6834222	Forward clutch drive hub		72-On	1	
65B	056354	6834221	4th Range clutch drive hub		72-On	1	
65B	056354A	23017267	4th Range clutch drive hub		72-On	1	use with 18T piston

ALLISON

MT640, 643, 644 - 4 Speed
MT650, 653, 654 - 5 Speed

HARD PARTS

ILL	ALTO No.	REF No.	Description	Spec	Year	Qty	Notes
N I	056358	23014527	Ground sleeve with bearing - use with 056356		72-On	1	
N I	056359	29507674	Ground sleeve with bearing - MT644/654		72-On	1	(23014306)

MISCELLANEOUS

ILL	ALTO No.	REF No.	Description	Spec	Year	Qty	Notes
62F	056564	6883045	Oil Filter tube (updates prior to S/N 58071)		72-On	1	
61F	056306	29501131	Plug for heater hole in pan		72-On	1	
66A	056356	23016722	Converter Hub, (bolt on) MT643/653		72-On	1	
66A	056357	23017446	Converter Hub, MT654		72-On	1	
N I	056672	23013906	Converter Hub, MT654		72-On	1	
67A	055555	6769631	Lock strip, TC hub bolt		72-On	4	
69C	055552	3909063	Retainer, center support bolts		72-On	8	Black
N I	056553	23013398	Bolt, Center support to case	2.5	72-On	1	
N I	056555	23045343	Bolt, Center support to case	3.0"	72-On	1	
N I	056557	29510838	Bolt, Output shaft		72-On	1	
N I	056558	29500739	Washer, Output shaft bolt		72-On	1	
70F	056009	29507909	Washer, Drain plug		72-On	1	
N I	056307	29513517	Accordian Spring, TC stator freewheel unit	.896"	72-On	1	MT640, MT643
N I	056308	6774966	Accordian Spring, TC stator freewheel unit		72-On	1	MT640,643,650.653
KT	056466	23017610	Manual Control Lever repair kit		72-On	1	Shaft & Nut
N I	001033	23018535Kit	Spring, Stator Freewheel Unit - 10 Pc. Kit		72-On	1	

ALLISON

HT740, 747, 750, 754, V730

1972-On

A>

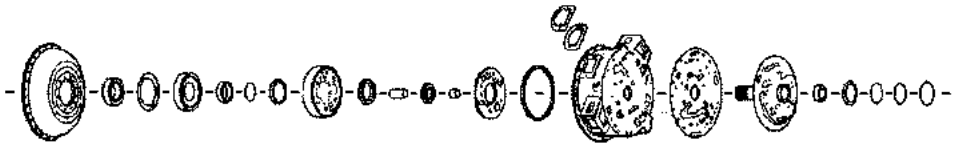

Front Pump

B>

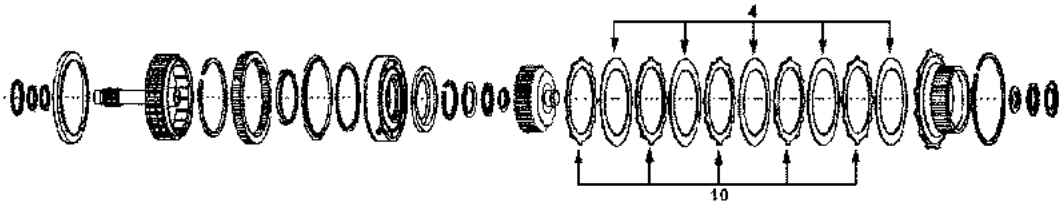

Forward Clutch

C>

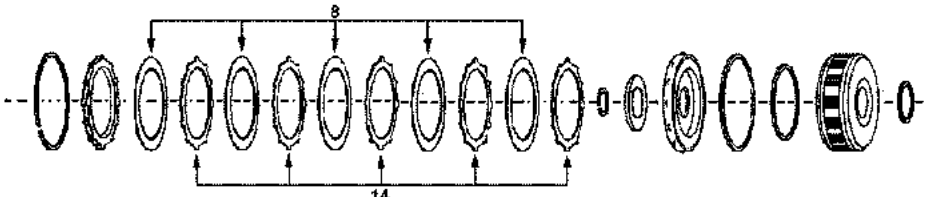

4th Range

D>

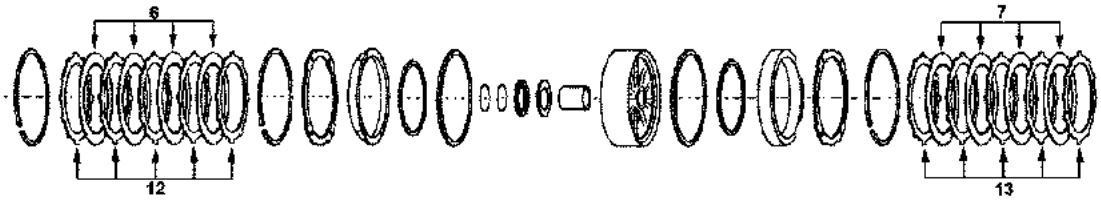

2nd Range

3rd Range

E>

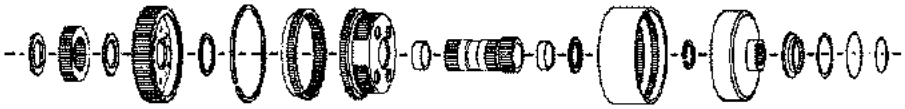

F>

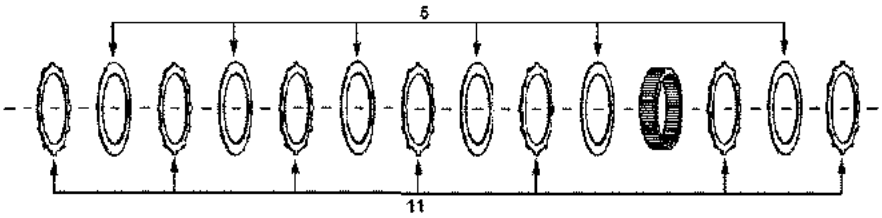

1st & Reverse

ALLISON

HT740, 747, 750, 754, V730
1972-On

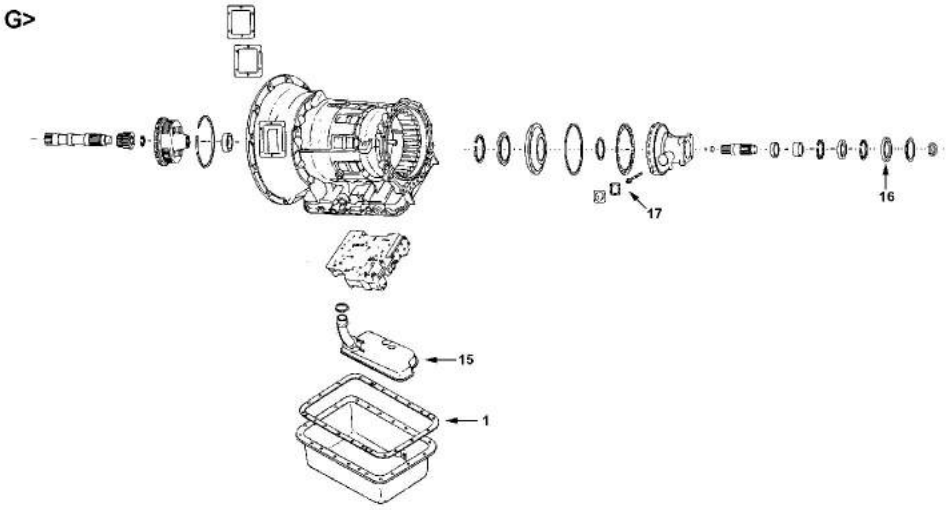

KITS

*Add Suffix SK for Super Kit

ILL	Description	Years	Friction Module	Steel Module	Overhaul Kit	Banner Kit	Master Kit
KT	Rebuilding Kit - with Foward & 4th Range Hardened Spline Frictions, Excludes 750DR	72-On	056752G	056753C	056804B	056905LS	056905
KT	Rebuilding Kit HT754 - with Foward & 4th Range Hardened Spline Frictions	72-On	056752G	056753C	056804E	056907LS	056907
KT	Rebuilding Kit HT740-770 - with Extra Low Clutch	72-On	056752GX	NA	NA	NA	NA

MISCELLANEOUS GASKETS & KIT COMPONENTS

ILL	ALTO No.	REF No.	Description	Spec	Year	Qty	Notes
1G	056816	23010652	Gasket, Oil Pan		72-On	1	
1G	056815	23010652	Gasket, Oil Pan- Armstrong	Fiber	72-On	1	
1G	056815A	23010652	Gasket, Oil Pan- Armstrong (Solid)	Fiber	72-On	1	
2G	055006	29501161	Gasket, PTO cover	Cork/Rub	72-On	1	
2G	055006A	29501161	Gasket, PTO cover - Armstrong	Fiber	72-On	1	
3G	055007	23018625	Gasket, Governor cover	Cork/Rub	72-On	1	
3G	055007A	23018625	Gasket, Governor cover	Fiber	72-On	1	

FRICTION CLUTCHES

ILL	ALTO No.	REF No.	Description	Spec	Year	Qty	Notes
4B	055724A255	23042199	Forward	.100	72-On	6	G3BK - 80T -OD: 9.119" - PLI
4B	055704C250	29537887	Forward with hardened spline	.100	72-On	5	G3BK - 80T -OD: 9.119" - PLI
5F	056710B380	23010439	1st Range	.148	72-On	6	G3BK - 62T -OD:12.557" - PLI
		23041786					
6D	056710B380	23010439	2nd Range	.148	72-On	6	G3BK - 62T -OD:12.557" - PLI
		23041786					
7D	056710B380	23010439	3rd Range	.148	72-On	4	G3BK - 62T -OD:12.557" - PLI
		23041786					
8C	055704C250	29537887	4th Range with hardened spline	.100	72-On	5	G3BK - 80T -OD: 9.119" - PLI

STEEL CLUTCHES

ILL	ALTO No.	REF No.	Description	Spec	Year	Qty	Notes
10B	056713	6834679	Forward	.103	72-On	5	14T - ID: 7.206"
11F	056711	23047771	1st Range	.103	72-On	7	38T - ID: 10.825"
11F	056711A	23047772	1st Range - selective	.120	72-On	AR	38T - ID: 10.825"
12D	056715	6834488	2nd Range	.103	72-On	AR	16T - ID: 10.746"

ALLISON

HT740, 747, 750, 754, V730

1972-On

STEEL CLUTCHES

ILL	ALTO No.	REF No.	Description	Spec	Year	Qty	Notes
12D	056715A	6834720	2nd Range	.120	72-On	AR	16T - ID: 10.746"
13D	056715	6834488	3rd Range	.103	72-On	AR	16T - ID: 10.746"
13D	056715A	6834720	3rd Range	.120	72-On	AR	16T - ID: 10.746"
14C	056713	6834679	4th Range	.103	72-On	5	14T - ID: 7.206"

PRESSURE PLATES

ILL	ALTO No.	REF No.	Description	Spec	Year	Qty	Notes
N I	056762	23011235	4th Range Backing Plate		72-On	AR	

FILTERS

ILL	ALTO No.	REF No.	Description	Spec	Year	Qty	Notes
N I	056942A	29532584	Filter - lo aluminum pan w/8" Tube		72-On	1	
15G	056944	6839636	Filter - w/6" Tube		72-On	1	
15G	056944A	23013625	Filter - w/7" Tube		72-On	1	

METAL CLAD SEALS

ILL	ALTO No.	REF No.	Description	Spec	Year	Qty	Notes
N I	056403	23016947	Front Pump		72-On	1	
G16	056405	6773311	Rear Cover		72-On	1	
N I	032410C	23010610	Manual Lever		72-On	1	

HARD PARTS

ILL	ALTO No.	REF No.	Description	Spec	Year	Qty	Notes
17G	055351	6885570	Governor Assembly - ID # 461		72-On	1	
17G	055352	6885571	Governor Assembly - ID # 462		72-On	1	
17G	056302	6885572	Governor Assembly - ID # 463		72-On	1	

MISCELLANEOUS

ILL	ALTO No.	REF No.	Description	Spec	Year	Qty	Notes
N I	001033	23018535Kit	Spring, Stator Freewheel Unit - 10 Pc. Kit		72-On	1	
N I	001034	6837976Kit	Roller, Stator Freewheel Unit - 10 Pc. Kit		72-On	1	

ALLISON WORLD

MD3060, 3066, 3070, 3560
B300, 400, 3000MH, 3000RDS 1995-On

A>

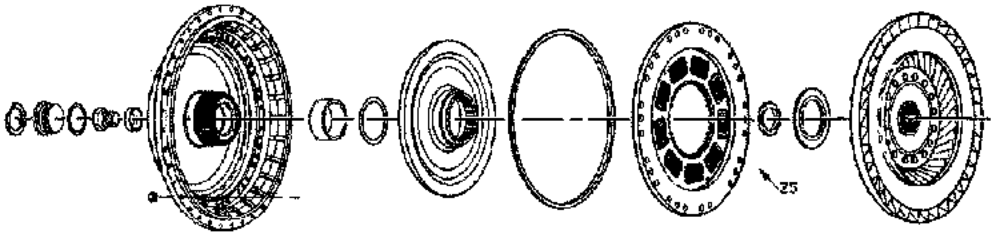

B>

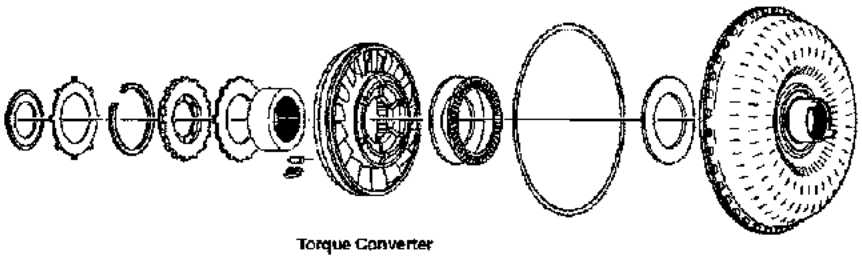

C>

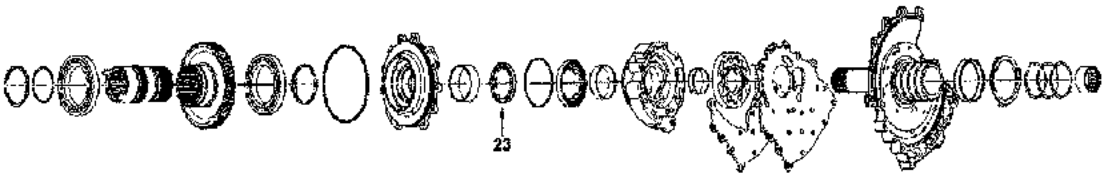

D>

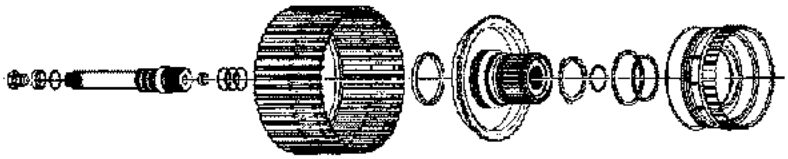

E>

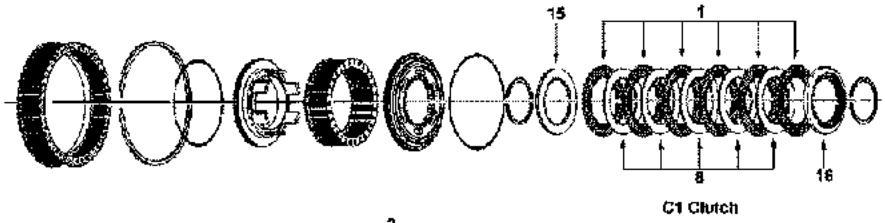

F>

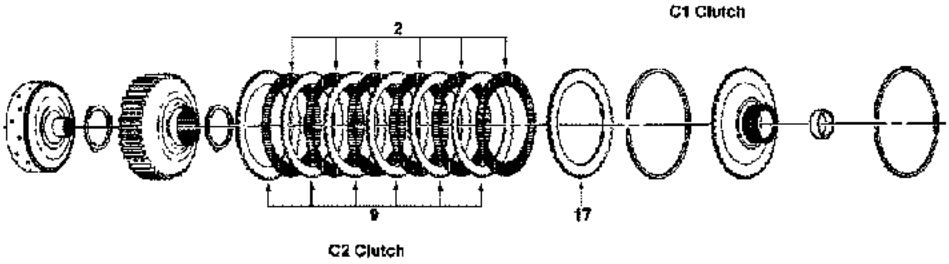

G>

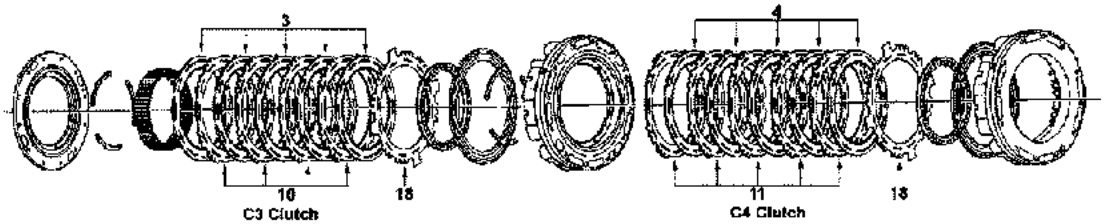

H>

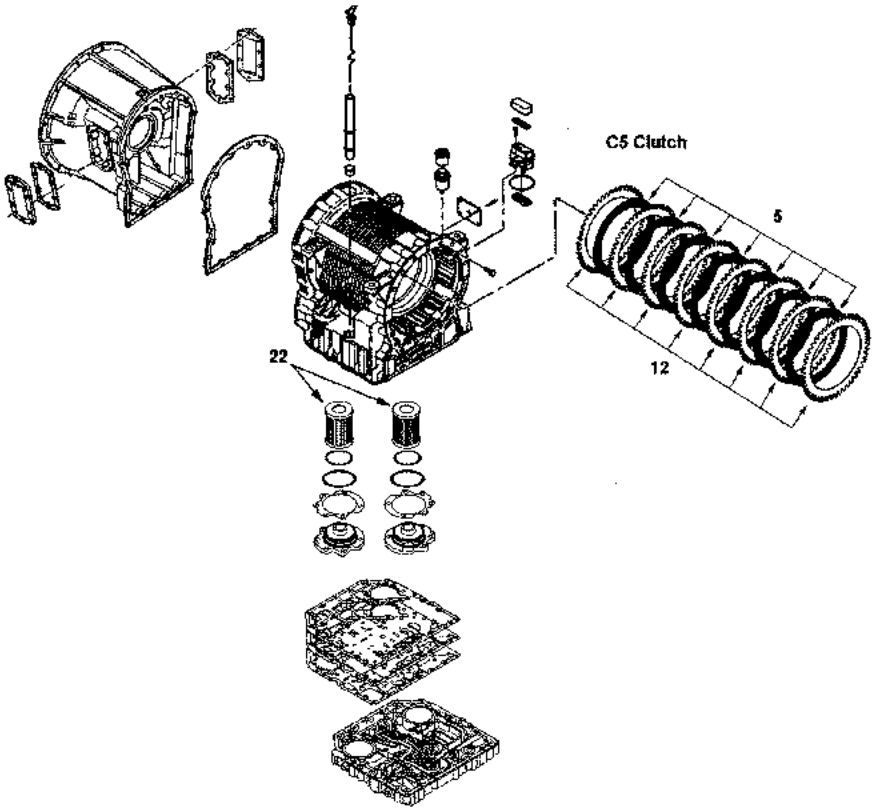
C5 Clutch
5
12
22

J>

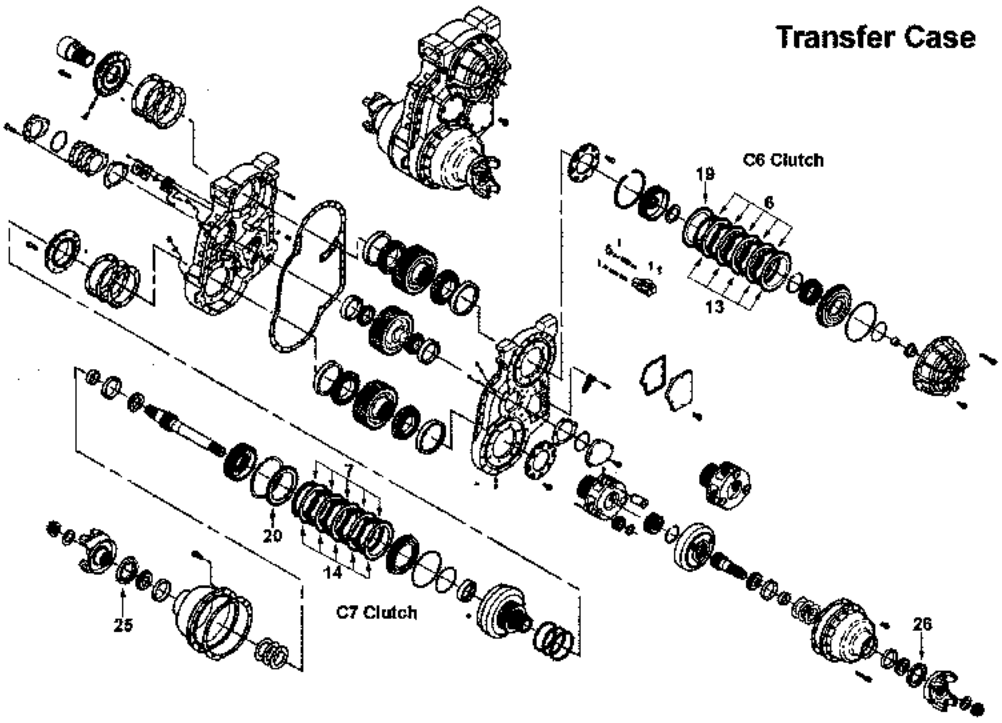
Transfer Case
C6 Clutch
19
6
13
7
20
14
C7 Clutch
25
26

ALLISON WORLD

MD3060, 3066, 3070, 3560
B300, 400, 3000MH, 3000RDS 1995-On

KITS

*Add Suffix SK for Super Kit

ILL	Description	Years	Friction Module	Steel Module	Overhaul Kit	Banner Kit	Master Kit
KT	Rebuilding Kit - 3rd Generation: Transmission only with OE style gasket set & control module	95-On	148752	148753	148800X	148901XLS	148901X
KT	Rebuilding Kit - 3rd Generation: Transmission only with OE style gasket set & control module w/ Wider ID C2	95-On	148752A	148753	148800X	148901AXLS	148901AX
KT	Kit - 3rd Generation Control Module	95-On			148801V		
KT	Kit - 4th Generation Control Module	06-On	148752A	148753A	148802X	148903XLS	148903X

FRICTION CLUTCHES

ILL	ALTO No.	REF No.	Description	Spec	Year	Qty	Notes
1E	148700A250	29536334	C1 Clutch - 2 teeth removed	.098	95-On	6	G3BRN - 44T - OD: 7.072" - PLI
		23045588					
2F	148702-250	29516170	C2 Clutch	.098	95-On	6	HEG - 84T - OD: 9.950" - PLI
2F	148712-250	29536335	C2 Clutch - 2 teeth removed	.098	00-On	6	G3BRN - 82T - OD: 10.5350" - PLNI
3G	148704A250		C3 Clutch - 2 teeth removed	.098	95-On	5	G3BRN - 75T - OD: 9.550" - SM
		29536336					
4G	148704A250		C4 Clutch - 2 teeth removed	.098	95-On	5	G3BRN - 75T - OD: 9.550" - SM
		29536336					
5H	148706-320	29516172	C5 Clutch	.127	95-On	7	G3BRN - 81T - OD: 10.00" - PLI
		29536337					
6J	148710-400	23048735	C6 Clutch (Transfer Case)	.157	95-On	5	HEG - 34T - OD: 8.589" - PLI
7J	055702B246	29535008	C7 Clutch (Transfer Case)	.098	95-On	5	G3BK - 60T - OD: 8.150" - PLI
		29544144					

STEEL CLUTCHES

ILL	ALTO No.	REF No.	Description	Spec	Year	Qty	Notes
8E	148701-245	23045589	C1 Clutch	.095	95-On	5	44T - ID: 4.231"
9F	148703-245	29503141	C2 Clutch	.095	95-On	6	48T - ID: 8.540"
10G	148705-250	29501423	C3 Clutch - Gen 4	.098	95-On	5	24T - ID: 7.700"
10G	148705A333	NA	C3 Clutch	.130"	95-On	5	24T - ID: 7.700"
11G	148705-250	29501423	C4 Clutch	.098	95-On	5	24T - ID: 7.700"
11G	148705A333	NA	C4 Clutch - Gen 4	.130"	95-On	6	24T - ID: 7.700"
12H	148707-248	23045573	C5 Clutch	.097	95-On	8	48T - ID: 8.165"
13J	148711-250	29506073	C6 Clutch (Transfer Case)	.098	95-On	5	40T - ID: 7.090"
14J	148709-220	29502156	C7 Clutch (Transfer Case)	.086	95-On	5	67T - ID: 6.580"

PRESSURE PLATES

ILL	ALTO No.	REF No.	Description	Spec	Year	Qty	Notes
15E	TBA	29534575	C1 Clutch - backing (MD models)	.315	98-On	1	stepped (retros)
N I	TBA	29539665	C1 Clutch - backing (MD models)	.545	98-On	1	22T - OD: 6.500"
15E	TBA	29534572	C1 Clutch - backing (HD models)	.315	98-On	1	stepped (retros)
16E	TBA	29534574	C1 Clutch - apply (MD models)	.178	98-On	1	22T - OD: 6.497" flat (retros)
16E	TBA	29534573	C1 Clutch - apply (HD models)	.157	98-On	1	flat (retros)
17F	TBA	23049224	C2 Clutch - apply (without PTO)		95-On	1	
17F	148761-630	23048530	C2 Clutch - apply (with PTO)	.249	95-On	1	
18G	148762-345	29501424	C3/C4 Clutch - apply	.136	95-On	2	
19J	TBA	29506074	C6 Clutch - backing		95-On	1	
20J	TBA	29508167	C7 Clutch - backing		95-On	1	

ALLISON WORLD

MD3060, 3066, 3070, 3560
B300, 400, 3000MH, 3000RDS 1995-On

FILTERS KITS

ILL	ALTO No.	REF No.	Description	Spec	Year	Notes
KT	FK148942A	29540494	Filter - 6"		95-On	

METAL CLAD SEALS

ILL	ALTO No.	REF No.	Description	Spec	Year	Qty	Notes
23C	148400	29507528	Front Pump		95-On	1	
24H	148405	29515690	Extension Housing - 4.738"		95-On	1	
N I	148406	29545518	Extension Housing - 3.750"		95-On	1	
25J	148425	29503336	Front Output (Transfer Case)		95-On	1	
26J	148425	29503336	Rear Output (Transfer Case)		95-On	1	

BUSHINGS

ILL	ALTO No.	REF No.	Description	Spec	Year	Qty	Notes
N I	148200	29533975	Oil Pump Housing - B300		95-On	1	

ELECTRONIC CONTROL COMPONENTS

ILL	ALTO No.	REF No.	Description	Spec	Year	Qty	Notes
N I	148501	29545638	Solenoid, Forward Assembly		95-On	1	

HARD PARTS

ILL	ALTO No.	REF No.	Description	Spec	Year	Qty	Notes
N I	TBA	29501543	Shaft, Main		95-On	1	
N I	148375	29513484	Shaft, Stator support		95-On	1	

ALLISON

1000, 2000, 2400 SERIES

1999-On

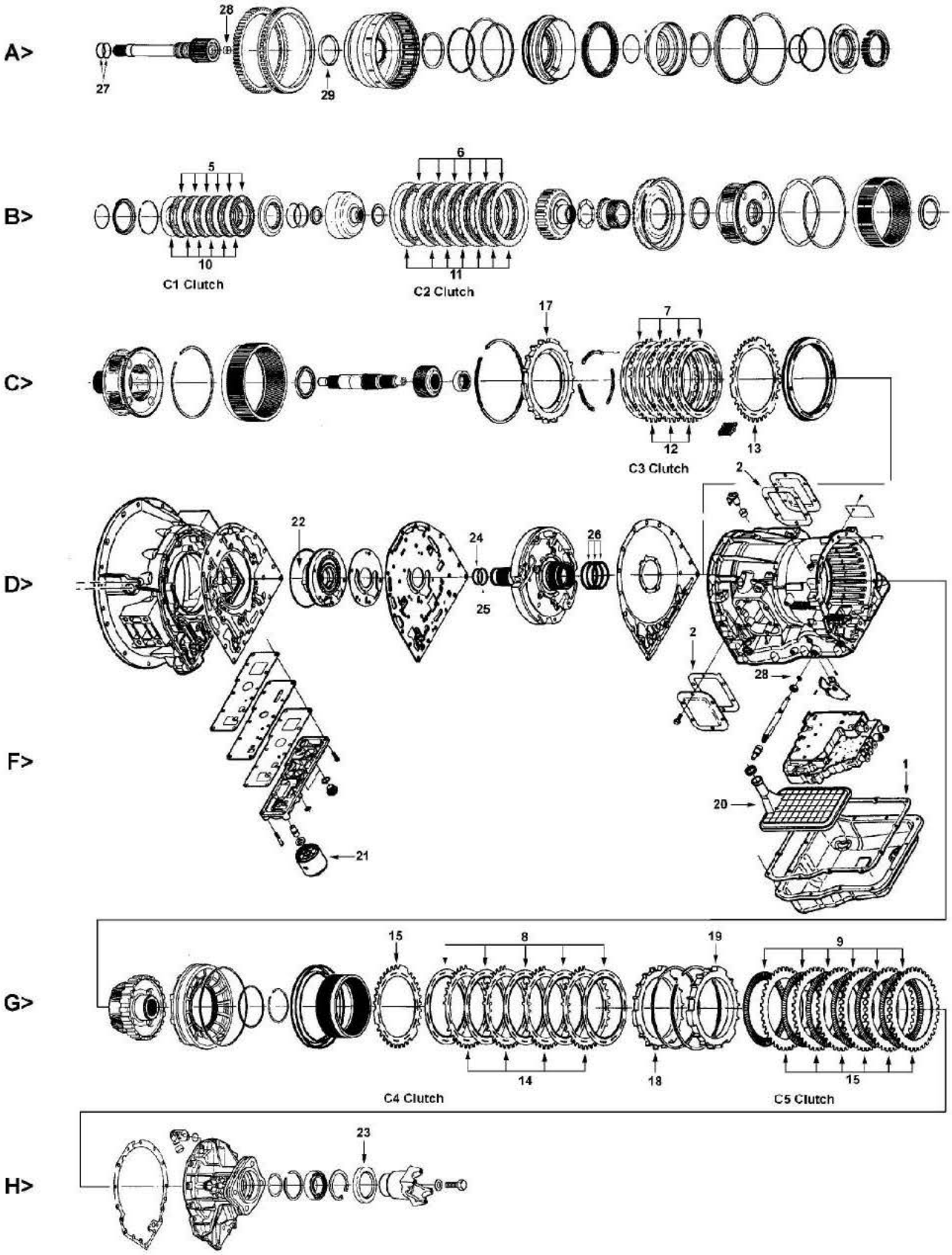

ALLISON

1000, 2000, 2400 SERIES

1999-On

KITS

*Add Suffix SK for Super Kit

ILL	Description	Years	Friction Module	Steel Module	Overhaul Kit	Banner Kit	Master Kit
KT	Rebuilding Kit without Bonded Pistons	99-05	152752	152753	152800	152901LS	152901
KT	Rebuilding Kit with Bonded Pistons	99-05	152752	152753	152800A	152901ALS	152901A
KT	Rebuilding Kit without Bonded Pistons	06-09	152752	152753	152802	152903LS	152903
KT	Rebuilding Kit with Bonded Pistons	06-09	152752	152753	152802A	152903ALS	152903A
KT	Rebuilding Kit with Bonded Pistons	10-On	152752A	152753A	152804A	152905ALS	152905A
KT	Rebuilding Kit without Bonded Pistons	10-On	152752A	152753A	152802	152905LS	152905

MISCELLANEOUS GASKETS & KIT COMPONENTS

ILL	ALTO No.	REF No.	Description	Spec	Year	Qty	Notes
1F	152816	29536526	Gasket, Oil Pan		99-On	1	
2D	055006	29501161	Gasket, PTO cover	Cork/Rub	99-On	2	
2D	055006A	29501161	Gasket, PTO cover - Armstrong	Fiber	99-On	opt.	

FRICTION CLUTCHES

ILL	ALTO No.	REF No.	Description	Spec	Year	Qty	Notes
5B	152700-250	29530312	C1 Clutch - external Teeth	.098	99-09	6	Red - 36T - ID: 3.230" - PLNI
		29538468					
5B	152700-178	29546276	C1 Clutch	.070	10-On	7	Red - 36T - ID: 3.230" - SB
6B	152702-248	29530313	C2 Clutch	.097	99-On	6	Red - 24T - OD: 7.500" - PLNI
		29538469					
7C	152704W183	29546270	C3 Clutch - Red Eagle® - waved	.072	10-On	4	Red - 117T - OD: 8.670" - SM - Waved
8G	152704W183	29546270	C4 Clutch - Red Eagle® - waved	.072	10-On	5	Red - 117T - OD: 8.670" - SM - Waved
8G	152704-246	29531049	C4 Clutch - Red Eagle®	.097	99-On	5	Red - 117T - OD: 8.670" - SM
7C	152704-246	29531049	C3 Clutch - Red Eagle®	.097	99-09	4	Red - 117T - OD: 8.670" - SM
9G	152706-180	29537393	C5 Clutch - Red Eagle®	.071	99-On	6	Red - 115T - OD: 8.670" - SB
9G	152706-250	29537393	C5 Clutch - Red Eagle®	.098	99-On	6	Red - 115T - OD: 8.670" - SB

STEEL CLUTCHES

ILL	ALTO No.	REF No.	Description	Spec	Year	Qty	Notes
10B	152701-218	29530314	C1 Clutch - Internal Teeth	.086	99-On	6	34T - OD: 4.743"
11B	152703-218	29530315	C2 Clutch	.086	99-On	7	42T - ID: 6.302"
12C	152705A170	NA	C3, C4 Clutch	.067	99-09	3	27T - ID: 7.111"
12C	152705-250	29531048	C3 Clutch	.098	99-09	3	27T - ID: 7.111"
12C	152705C250	29546701	C3 Clutch	.098	10-On	4	27T - ID: 7.112"
14G	152705-250	29531048	C4 Clutch	.098	99-09	4	27T - ID: 7.111"
14G	152705C250	29546701	C4 Clutch	.098	10-On	6	27T - ID: 7.112"
15G	TBA	29531046	C4 Clutch - wave		99-On	1	27T
16G	152707-250	29536482	C5 Clutch	.098	99-On	5-6	36T - ID: 7.108"
16G	152707-200	29536481	C5 Clutch - selective	.078	99-On	AR	36T - ID: 7.108"
16G	152707-300	29536483	C5 Clutch - selective	.118	99-On	AR	36T - ID: 7.108"

STEEL CLUTCHES- HI-PERFORMANCE

ILL	ALTO No.	REF No.	Description	Spec	Year	Qty	Notes
16G	152703K170	NA	C2 Clutch	.067	99-On	8	42T - ID 6.302" -Kolene
16G	152703K218	NA	C2 Clutch	.086	99-On	7	42T - ID 6.302" -Kolene
16G	152705A170	NA	C3-C4 Clutch - No Slots	.067	99-On	1	27T - ID: 7.111"
16G	152705A218	NA	C3-C4 Clutch - No Slots	.086	99-On	1	27T - ID: 7.111"
16G	152705A250	NA	C3-C4 Clutch - No Slots	.098	99-On	1	27T - ID: 7.111"
16G	152705AK170	NA	C3-C4 Clutch - No Slots	.067	99-On	AR	27T - ID: 7.111" - Kolene

ALLISON

1000, 2000, 2400 SERIES

1999-On

STEEL CLUTCHES- HI-PERFORMANCE

ILL	ALTO No.	REF No.	Description	Spec	Year	Qty	Notes
16G	152705AK218	NA	C3-C4 Clutch - No Slots	.086	99-On	5	27T - ID: 7.111" - Kolene
16G	152705AK250	NA	C3-C4 Clutch - No Slots	.098	99-On	AR	27T - ID: 7.111" - Kolene
16G	152705K170	NA	C3-C4 Clutch - No Slots	.067	99-On	4	27T - ID: 7.111" - Kolene
16G	152705K250	NA	C3-C4 Clutch - No Slots	.098	99-On	2	27T - ID: 7.111" - Kolene
16G	152707K200	NA	C5 Clutch	.078	99-On	AR	36T - ID 7.106" - Kolene
16G	152761-254	NA	C1 Clutch	.465	99-On	8	17T - OD 4.726"
16G	152761-500	NA	C1 Clutch	.200	99-On	1	34T - OD 4.743"

PRESSURE PLATES

ILL	ALTO No.	REF No.	Description	Spec	Year	Qty	Notes
N I	152766	29538521	C1 Clutch- top		99-On	1	
N I	152766C	29538521	C1 Clutch- bottom		99-05	1	
N I	152761P115	NA	C1 Clutch- top-selective	.453	99-On	1	
N I	152762A500	NA	C2 Clutch	.199	99-On	1	42T- ID: 6.302"
13C	152761B635	NA	C3 Clutch, C4 Clutch - apply	.250	99-On	1	30T
13C	152761L3175	29535637	C3 Clutch, C4 Clutch - apply	.125	99-On	1	30T with slots
NI	152763P102		C3 Clutch - Internal Spline	.400	99-On	1	15T - ID: 6.221"
17C	TBA	29535639	C3 Clutch - backing		99-On	1	
18G	TBA	29535640	C4 Clutch - backing		99-On	1	
19G	TBA	29531058	C5 Clutch - backing		99-On	1	

OEI® Original Equipment Improvements

ILL	ALTO No.	REF No.	Description	Spec	Year	Qty	Notes
KT	152755	NA	PowerPack® C1 Clutch		99-05	1	
KT	152755A	NA	PowerPack® C1 Clutch		06-On	1	
KT	152755B	NA	PowerPack® C1 Clutch - G3		99-On	1	
KT	152756	NA	PowerPack® C2 Clutch		99-05	1	
KT	152756A	NA	PowerPack® C2 Clutch		06-On	1	
KT	152756B	NA	PowerPack® C2 Clutch - G3		99-On	1	
KT	152757	NA	PowerPack® C3 Clutch		99-05	1	
KT	152757A	NA	PowerPack® C3 Clutch		06-On	1	
KT	152757B	NA	PowerPack® C3 Clutch - G3		99-On	1	
KT	152758	NA	PowerPack® C4 Clutch		99-05	1	
KT	152758A	NA	PowerPack® C4 Clutch		06-On	1	
KT	152758B	NA	PowerPack® C4 Clutch - G3		99-On	1	
KT	152759	NA	PowerPack® C5 Clutch		99-On	1	
KT	152759B	NA	PowerPack® C5 Clutch - G3		99-On	1	
KT	152985	SK®	VB Shift Kit SK® Allison-Jr - 1000 Series	Transgo®	05-On	1	
KT	152986	SK®	VB Shift Kit SK® Allison Shift Kit - 1000-2400 Series	Transgo®	01-04	1	

SHAFTS

ILL	ALTO No.	REF No.	Description	Spec	Year	Qty	Notes
N I	152378	NA	Output Shaft		99-On	1	
N I	152378HP	NA	Output Shaft Hi-Performance for 4WD		99-On	1	300M

FRICTION CLUTCHES- HI-PERFORMANCE

ILL	ALTO No.	REF No.	Description	Spec	Year	Qty	Notes
NI	152700D170	NA	C1 Clutch - Internal Spline	.067	01-On	8	G3BR - 34T - OD: 4.743"
NI	152700-178	NA	C1 Clutch - Internal Spline	.067	01-On	8	G3BR - 34T - OD: 4.743"
NI	152701A170	NA	C1 Clutch , One Sided	.067	01-On	8	G3BR - 36T - ID: 2.916"

ALLISON

1000, 2000, 2400 SERIES

1999-On

FRICTION CLUTCHES- HI-PERFORMANCE

ILL	ALTO No.	REF No.	Description	Spec	Year	Qty	Notes
NI	152701D170	NA	C1 Clutch - External Spline	.067	01-On	8	G3BR - 36T - OD: 5.049"
NI	152704-213	NA	C3/C4 Clutch - Internal Spline	.084	01-On	7	G3BR - 108T - OD: 8.670" - PLNI
NI	152704A216	NA	C3/C4 Clutch - Internal Spline	.085	99-09	12	G3BR - 24T - OD: 8.670" - PLNI
NI	152706A180	NA	C5 Clutch - Internal Spline	.071	99-09	8	G3BR - 115T - OD: 8.660" - PLNI
NI	152702B185	NA	C2 Clutch - Internal Spline	.073	99-09	8	G3BR - 24T - OD: 7.50" - PLNI

FILTERS

ILL	ALTO No.	REF No.	Description	Spec	Year	Qty	Notes
20F	152940	29537617	Filter - Deep pan		99-05	1	
		29537966					
20F	152940A	29542824	Filter - Deep pan		06-On	1	Retro fits back to 99-On
20F	152941	29537514	Filter - Shallow pan		99-05	1	
		29537965					
20F	152941A	29542833	Filter - Shallow pan		06-On	1	Retro fits back to 99-On
21F	152942	29537268	Filter - Spin on		99-On	1	

METAL CLAD SEALS

ILL	ALTO No.	REF No.	Description	Spec	Year	Qty	Notes
22D	152400	29536299	Front Pump		99-On	1	
23H	152405	29536379	Extension Housing		99-On	1	
28D	032410C	23010610	Manual Lever		99-On	1	

SEALING RINGS

ILL	ALTO No.	REF No.	Description	Spec	Year	Qty	Notes
KT	152600	NA	Kit		99-On	1	
24D	152100	29531037	Front Pump stator - Front	Vespel®	99-On	1	comes in kit 29536405
25D	152101	29531038	Front Pump stator - Front	Vespel®	99-On	1	
26D	152102	29531036	Front Pump stator - Rear	Vespel®	99-On	3	
27A	152100	29531037	Input Shaft	Vespel®	99-On	2	comes in kit 29536405

BUSHINGS

ILL	ALTO No.	REF No.	Description	Spec	Year	Qty	Notes
N I	152200	29536703	Front Pump body		99-On	1	
N I	152201	29534369	Stator Support - rear	33.8mm	99-On	1	
28A	152202	29531084	Input Shaft - rear	20mm	99-On	1	
29A	152203	29531072	C1/C2 Clutch drum		99-On	1	
N I	152204	19531005	Output Shaft		99-On	1	

ELECTRONIC CONTROL COMPONENTS

ILL	ALTO No.	REF No.	Description	Spec	Year	Qty	Notes
N I	062504	24212690	Solenoid TCC/PWM (BW)		99-On	1	
N I	152501	NA	Solenoid ISS/OSS/TSS		00-12	1	

PISTONS

ILL	ALTO No.	REF No.	Description	Spec	Year	Qty	Notes
N I	152670	NA	Piston Kit		99-05	1	4 Pistons
N I	152670A	NA	Piston Kit		06-11	1	3 Pistons
N I	152670B	NA	Piston Kit		10-On	1	3 Pistons
N I	152300	29536203	Piston C1 Balance 5 Speed		99-05	1	
N I	152300A	29542815	Piston C1 Balance 6 Speed		06-On	1	

ALLISON

1000, 2000, 2400 SERIES

1999-On

PISTONS

ILL	ALTO No.	REF No.	Description	Spec	Year	Qty	Notes
N I	152301	29536105	Piston C2 Balance 5 Speed		99-05	1	
N I	152302	29536105	Piston C3, C4 Clutch Apply		99-05	1	
N I	152303	29537394	Piston C3, C4 Clutch 5 Speed,6 Speed		99-09	1	
N I	152303A	29546697	Piston C3, C4 Clutch Apply		10-On	1	

ALLISON

CLBT 700 SERIES

KITS

ILL	Description	Friction Module	Steel Module	Overhaul Kit	Banner Kit	Master Kit
NI	Rebuilder Kit	352752	352753	352800	352901LS	352901

MISCELLANEOUS GASKETS & KIT COMPONENTS

ILL	ALTO No.	REF No.	Description	Spec	Year	Qty	Notes
NI	056815A	23016681	Gasket, Oil Pan (Solid)			1	
NI	055006A	23016683	Gasket, PTO Cover AT540			1	
NI	055007A	23018625	Gasket, Governor Cover AT540			1	
NI	056002	6750186	Gasket, Convertor Access Cover			1	
NI	056003	6758442	Gasket, PTO Cover CLBT			1	
NI	056004	5181902	Gasket, Front Cover			1	
NI	056005A	6880901	Gasket, Hub Cover .020"	.020"		1	
NI	056005B	NA	Gasket, Hub Cover .009"	.009"		1	
NI	056011	6839213	Gasket, Low/Rev. Adapter & Rear Cover			1	
NI	352003	6755672	Gasket, Bearing Retainer			1	
NI	352005	6773770	Gasket, Disconnect- Clutch Housing			1	
NI	352006	6778451	Gasket, Valve Body			1	
NI	352007	6778452	Gasket, Adapter Plate			1	
NI	352008	6838524	Gasket, Retarder Control Valve Body			1	
NI	352009	6839429	Gasket, Transfer Housing			1	
NI	352010	6839431	Gasket, Housing Adapter			1	
NI	352011	6882326	Gasket, Convertor Housing			1	
NI	352013	23046658	Gasket, Retarder Housing			1	
NI	352014	29524150	Gasket, End Cover			1	
NI	055554	6836587	Bolt, Center support to case		70-On	1	
NI	056553	23013398	Bolt, Center support to case	2.5	72-On	1	
NI	056554	23045343	Bolt, Center support to case	2.5	72-On	1	
NI	352560	6755289	Lock Strip		72-On	1	
NI	056561	6880889	Lock Strip, Torque Convertor Bolts		72-On	6	
NI	352560	6755289	Lock Strip		72-On	1	
NI	056009	29507909	Washer, Drain Plug		72-On	1	
NI	056556	23013841	Washer, Bolt		72-On	1	
NI	352150	6772740	Washer, Copper		72-On	1	
NI	352151	6703212	Washer, Copper		72-On	1	
NI	352315	NA	Bolt, 6-point		72-On	1	

FRICTION CLUTCHES

ILL	ALTO No.	REF No.	Description	Spec	Year	Qty	Notes
NI	055704C250	29537887	2nd & 3rd Range - Hardened spline	.100/2.55	70-On	10	G3BK - 80T - OD: 9.100"
NI	056710B380	23010439	1st Range	.148	72-On	24	G3BK - 62T -OD:12.557" - PLI
NI	056712	23048511	Lockup Clutch (TC) - MT644/654	.205	72-On	1	G3BK - 73T- OD:14.600" - PLI

STEEL CLUTCHES

ILL	ALTO No.	REF No.	Description	Spec	Year	Qty	Notes
NI	056711	23047771	1st Range	.103	72-On	7	38T - ID: 10.825"
NI	056711A	23047772	1st Range - selective	.120	72-On	AR	38T - ID: 10.825"
NI	056715	6834488	2nd Range	.103	72-On	AR	16T - ID: 10.746"
NI	056715A	6834720	2nd Range	.120	72-On	AR	16T - ID: 10.746"
NI	056713	6834679	Forward	.103	72-On	5	14T - ID: 7.206"

ALLISON

CLBT 700 SERIES

METAL CLAD SEALS

ILL	ALTO No.	REF No.	Description	Spec	Year	Qty	Notes
NI	056405	6773311	Extension Housing	4.758	72-On	1	
NI	056404	6771231	Convertor Hub		72-On	1	
NI	032410C	23010610	Manual Lever		69-98	1	
NI	056406	23016947	Front Pump		69-98	1	
NI	056407	6773466	Transfer Housing		69-98	1	
NI	352400	6832559	Oil Seal		69-98	1	
NI	352401	23014064	Oil Seal		69-98	1	
NI	352402	6772608	Wiper-Scraper		69-98	1	
NI	352403	6883697	Oil Seal		69-98	1	

SEALING RINGS

ILL	ALTO No.	REF No.	Description	Spec	Year	Qty	Notes
NI	056602	23019653	Convertor Hub		69-98	1	
NI	056603	23014441	Front and Center Support		69-98	2	
NI	056604	23019652	Input Shaft and Retarder		69-98	2	
NI	056605	23014631	Input Shaft		69-98	1	

FORD

A4LD, A4LDE, 4R44E, 4R55E
5R44E, 5R55E 1985-On

A>

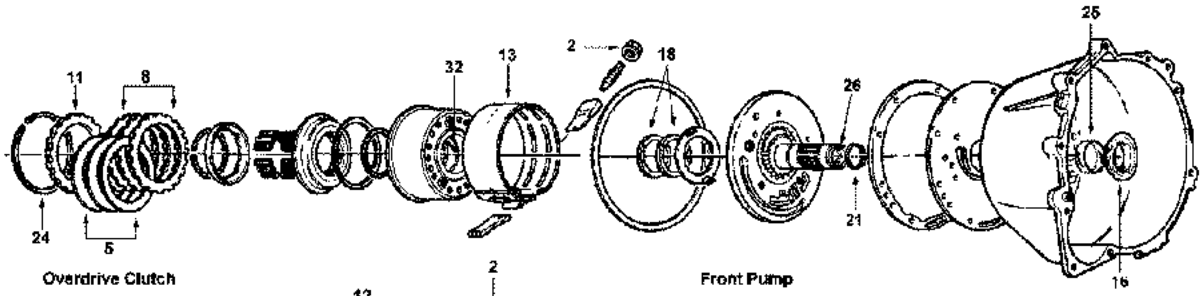

B>

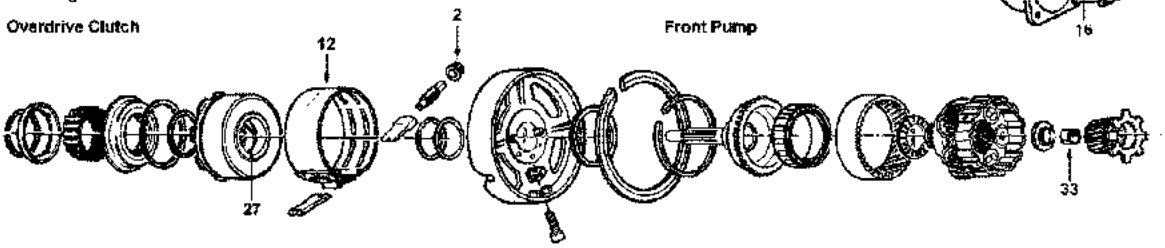

C>

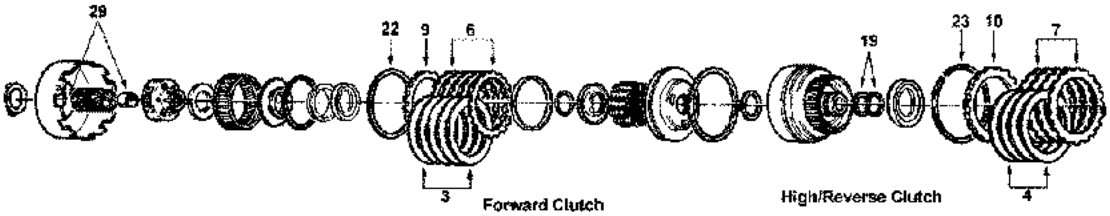

D>

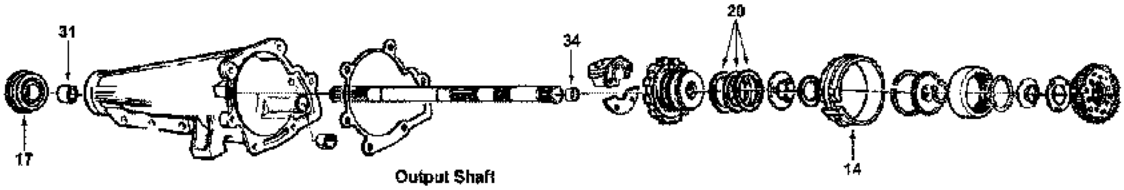

E>

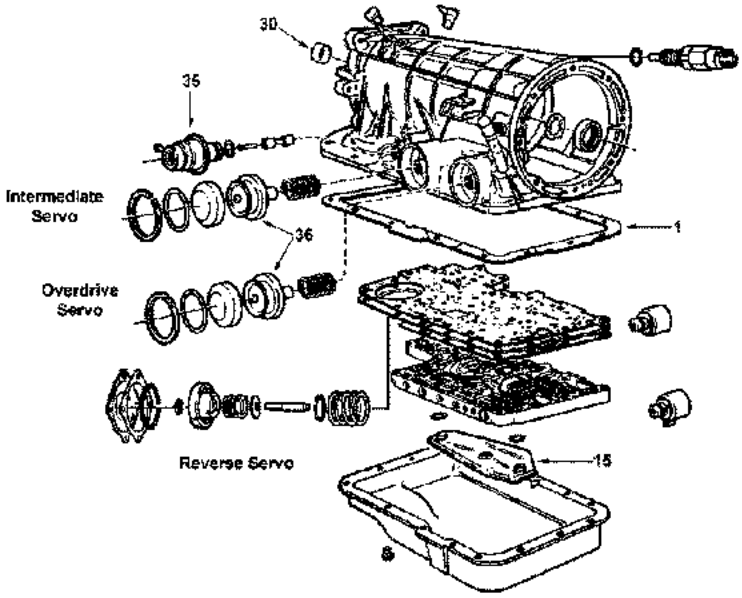

F>

FORD

A4LD, A4LDE, 4R44E, 4R55E
5R44E, 5R55E 1985-On

KITS

*Add Suffix SK for Super Kit

ILL	Description	Years	Friction Module	Steel Module	Overhaul Kit	Banner Kit	Master Kit
KT	Rebuilding Kit - A4LD	85-89	041752A	041753A	041802	041903LS	041903
KT	Rebuilding Kit - A4LD	90-95	041752C	041753C	041802A	041905LS	041905
KT	Rebuilding Kit - A4LDE, 4R44E, 4R55E	95-96	041752C	041753C	041804	041907LS	041907
KT	Rebuilding Kit - All	97-On	041752D	041753D	041806	041909LS	041909

MISCELLANEOUS GASKETS & KIT COMPONENTS

ILL	ALTO No.	REF No.	Description	Spec	Year	Qty	Notes
1E	041816A	E5TZ-7A191A	Gasket, Oil Pan	Cork/Rub	85-On	1	
2A	025507	380850-S	Nut, Band Adjusting		85-On	2	

FRICTION CLUTCHES

ILL	ALTO No.	REF No.	Description	Spec	Year	Qty	Notes
3C	041700	E3ZZ-7B164A	Forward	.075	85-89	4-5	HEG - 72T - OD: 4.650" - WF
3C	041710	F0TZ-7B164A	Forward	.069	90-96	6	HEG - 72T - OD: 4.650" - PL
3C	041710A	1L5Z-7B164AA	Forward with Directional Grooves	.069	97-On	5-6	HEG - 72T - OD: 4.650" - SP
4C	041702	E3ZZ-7B164B	High & Reverse	.075	85-89	4-5	HEG - 48T - OD: 4.893" - WF
4C	041712	F0TZ-7B164B	High & Reverse	.069	90-96	6	HEG - 48T - OD: 4.893" - WF
4C	041712A	F7ZZ-7B164BA	High & Reverse with Directional Grooves	.069	97-On	4-6	HEG - 48T - OD: 4.893" - SP
4C	041702A	NA	High & Reverse - PowerPack® Comp.	.059	85-On	AR	Tan - 48T - OD: 4.893" - SM
5A	041704	E5TZ-7B164A	Overdrive/Coast	.078	85-89	2-3	HEG - 32T - OD: 4.893" - WF
5A	041714	F0TZ-7B164C	Overdrive/Coast	.069	90-96	2-3	HEG - 16T - OD: 4.893" - WF
5A	041714A	F7ZZ-7B164CA	Overdrive/Coast with Directional Grooves	.069	97-On	2-3	HEG - 16T - OD: 4.893" - SP

STEEL CLUTCHES

ILL	ALTO No.	REF No.	Description	Spec	Year	Qty	Notes
6C	041705	D8ZZ-7B442A	Forward	.068	85-89	4-5	19T - ID: 3.80"
6C	041709	F0TZ-7B442A	Forward	.065	90-On	5-6	19T - ID: 3.80"
6C	041701-250	NA	Forward Oversize (Selective)	.100	85-On	AR	19T - ID: 3.80"
7C	041707	D8ZZ-7B442B	High & Reverse	.068	85-89	5	20T - ID: 3.970"
7C	041711	F0TZ-7B442B	High & Reverse	.065	90-96	6	20T - ID: 3.970"
7C	041711-210	F77Z-7B442AA	High & Reverse	.082	97-On	4-6	20T - ID: 3.970"
7C	041703-250	NA	High & Reverse Oversize (Selective)	.100	85-On	AR	20T - ID: 3.970"
7C	041703A	NA	High & Reverse - PowerPack® Comp.	.059	85-On	AR	20T - ID: 3.970"
8A	041707	D8ZZ-7B442B	Overdrive/Coast	.075	85-89	2-3	20T - ID: 3.970"
8A	041711	F0TZ-7B442B	Overdrive/Coast	.065	90-On	2-3	20T - ID: 3.970"
8A	041703-250	NA	Overdrive/Coast Oversize (Selective)	.100	85-On	AR	20T - ID: 3.970"

PRESSURE PLATES

ILL	ALTO No.	REF No.	Description	Spec	Year	Qty	Notes
9C	TBA	D4ZZ-7B066A	Forward - backing	.215	85-89	1	
9C	041760A500	F0TZ-7B066A	Forward - backing	.200	90-On	1	
10C	041761A565	D4ZZ-7B066B	High & Reverse - backing	.220	85-89	1	
10C	041761A500	F0TZ-7B066B	High & Reverse - backing	.200	90-On	1	
11A	041761A565	D4ZZ-7B066B	Overdrive - backing	.220	85-89	1	
11A	041761A500	F0TZ-7B066B	Overdrive - backing	.200	90-On	1	

OEI® Original Equipment Improvements

ILL	ALTO No.	REF No.	Description	Spec	Year	Qty	Notes
KT	041756	NA	PowerPack® - High Reverse		85-On	1	Adds Torq. capacity
KT	041986	SK® A4LD-jr	Shift Kit® - A4LD	Transgo®	85-95	1	

FORD

A4LD, A4LDE, 4R44E, 4R55E
5R44E, 5R55E 1985-On

OEI® Original Equipment Improvements

KT	041987	SK® 44-55E	Shift Kit® - A4LDE, 4R44E, 4R55E, 5R55E	Transgo®	95-On	1	

BANDS

ILL	ALTO No.	REF No.	Description	Spec	Year	Qty	Notes
12B	041950	E6TZ-7D034A	Intermediate	Tan	85-On	1	
12B	041950	E6TZ-7D034A	Overdrive	Tan	85-On	1	
13A	041953	F0TZ-7F196A	Intermediate - 4.0L only	Tan	90-91	1	
14D	041955	1Z5Z-7D095AA	Reverse	Tan	85-On	1	

FILTERS

ILL	ALTO No.	REF No.	Description	Spec	Year	Qty	Notes
15F	TBA	NA	Filter - 2wd		85	1	
15F	041942	E6TZ-7A098B	Filter - 2wd screen all metal		86-88	1	
15F	041942A	E9TZ-7A098C	Filter - 2wd screen all metal with lip		89-95	1	
15F	041942B	XL2Z-7A098AA	Filter - 2wd metal/plastic low pickup		96-On	1	will retro-fit with short bolt
15F	TBA	NA	Filter - 4wd		85	1	
15F	041948	E6TZ-7A098A	Filter - 4wd screen all metal		86-95	1	
15F	041944	XL2Z-7A098BA	Filter - 4wd metal/plastic high pickup		96-On	1	

METAL CLAD SEALS

ILL	ALTO No.	REF No.	Description	Spec	Year	Qty	Notes
16A	041400A	E5TZ-7A248A	Front Pump		85-96	1	
16A	041400B	F77Z-7A248AA	Front Pump		97-On	1	
17D	041405A	D5ZZ-7052A	Extension Housing without Boot		85-On	1	
17D	041405	E2ZZ-7052A	Extension Housing with Boot		85-On	1	
N I	023406	D5AZ-7B498A	Manual Lever		85-On	1	

SEALING RINGS

ILL	ALTO No.	REF No.	Description	Spec	Year	Qty	Notes
KT	041601	B228	Sealing Ring Kit - 3T/5M		85-On	1	
18A	041100	D4ZZ-7D025A	Front Pump support to Overdrive drum	Metal	85-On	2	
18A	041100A	E5TZ-7D025A	Front Pump support to Overdrive drum	Teflon	85-On	2	Not in Kit
19C	041101	D4ZZ-7D019A	Forward clutch drum	Metal	85-96	2	design change in 1997+
20D	041102	D4ZZ-7D011B	Governor	Metal	85-On	3	
20D	041102A	F0TZ-7D011A	Governor - seal plated	Metal	85-On	3	
20D	041102B	E7TZ-7D011A	Governor - viton	Rubber	85-On	3	
21A	041103	E5TZ-7L323A	Front Pump support - front	Teflon	85-On	1	

SNAP RINGS

ILL	ALTO No.	REF No.	Description	Spec	Year	Qty	Notes
KT	041680	NA	Kit		85-On	1	
22C	041251-054	E860115-S	Forward Drum	.054	85-On	AR	
22C	041251-066	E860116-S	Forward Drum	.066	85-On	AR	
22C	041251-082	E860117-S	Forward Drum	.082	85-On	AR	
22C	041251-096	E860118-S	Forward Drum	.096	85-On	AR	
N I	028254-090	4461059	Forward- 5R55E	.090	85-On	AR	

BUSHINGS

ILL	ALTO No.	REF No.	Description	Spec	Year	Qty	Notes
KT	041625A	NA	Bushing Kit		85-On	1	
25A	041200A	NA	Converter Housing	Bronze	85-On	1	

FORD

A4LD, A4LDE, 4R44E, 4R55E
5R44E, 5R55E 1985-On

BUSHINGS

ILL	ALTO No.	REF No.	Description	Spec	Year	Qty	Notes
25A	041200X	NA	Converter Housing	Babbit	85-On	1	
26A	041201	NA	Front Pump stator support - Front	Steel	85-89	1	
26A	041201A	NA	Front Pump stator support - Front	Bronze	90-On	1	
N I	041200	NA	Front Pump stator support - Rear		85-On	1	
27B	041203*	NA	High Drum - Steel Drum	2.368	85-96	1	
27B	041203A*	NA	High Drum - Cast Iron Drum	2.345	85-96	1	
N I	041204*	NA	Reverse Brake drum		85-96	1	
29C	041205	NA	Sun Gear		85-On	1	
30E	041206*	NA	Case		85-96	1	
31D	041207	D7FZ-7A034A	Extension Housing		85-On	1	
32A	041203A	NA	Overdrive Drum		85-On	1	
33B	041208	NA	Overdrive Sun gear		85-On	1	
34D	041209	NA	Output Shaft	Bronze	85-91	1	
34D	041210	NA	Output Shaft (enclosed bearing /bushing)		92-On	1	
			*Bushing replaced by bearing				

WASHERS

ILL	ALTO No.	REF No.	Description	Spec	Year	Qty	Notes
KT	041635	NA	Washer Kit - no selectives		74-87	1	
KT	041635A	NA	Washer Kit - no selectives		91-95	1	
KT	041635B	NA	Washer Kit - no selectives		85-90	1	

MODULATORS

ILL	ALTO No.	REF No.	Description	Spec	Year	Qty	Notes
35E	041501	E5TZ-7A377C	Modulator		85-On	1	
35E	041502	E4SZ-7A377A	Modulator - Turbo	White	85-88	1	

ELECTRONIC CONTROL COMPONENTS

ILL	ALTO No.	REF No.	Description	Spec	Year	Qty	Notes
N I	041503	F77Z-7G484AB	Solenoid Shift/Coast 4R44E, 5R44E, 5R55E		97-On	1	
N I	041505	XL2Z-7G383AA 50155	Solenoid EPC 4R44E, 5R44E, 5R55E		95-On	1	

PISTONS

ILL	ALTO No.	REF No.	Description	Spec	Year	Qty	Notes
36E	041302A	E3ZZ-7D021A	Intermediate Servo piston	M.Rubber	85-89	1	1.845"
36E	041301	D4ZZ-7D021A	Intermediate & Overdrive Servo piston	M.Rubber	85-96	1	AA/BB - ID: 2.075"
36E	041302	D8DZ-7D021A	Intermediate & Overdrive Servo piston	M.Rubber	90-96	1	
36E	041303	F2ZZ-7D021A	Intermediate & Overdrive Servo piston	M.Rubber	90-96	1	BA/BB - ID: 1.920"
36E	041304	F0TZ-7D021A	Intermediate & Overdrive Servo piston	M.Rubber	90-96	1	
36E	041305	F77Z-7D021A2A	Intermediate & Overdrive Servo piston	M.Rubber	97-00	1	2.100"
36E	041306	F77Z-7D021BA	Intermediate & Overdrive Servo piston	M.Rubber	97-On	1	
36E	041307	F77Z-7D021CA	Intermediate & Overdrive Servo piston	M.Rubber	97-99	1	
36E	041308	F77Z-7D021DA	Intermediate & Overdrive Servo piston	M.Rubber	97-99	1	1.775".

HARD PARTS

ILL	ALTO No.	REF No.	Description	Spec	Year	Qty	Notes
NI	041322	E5TZ-7L490A PS90119	Sprag, Overdrive		97-On	1	

FORD

5R55N 1999-2002, 5R55W 2002-On
5R55S 2003-On

KITS

*Add Suffix SK for Super Kit

ILL	Description	Years	Friction Module	Steel Module	Overhaul Kit	Banner Kit	Master Kit
KT	Rebuilding Kit - 5R55N - with 2 molded pistons	99-02	137752	137753	137800	137901LS	137901
KT	Rebuilding Kit - 5R55W, 5R55S - with 1 molded piston	02-On	137752A	137753	137802	137903LS	137903

KITS - HI-PERFORMANCE - Red Eagle®

ILL	Description	Years	Friction and Steel Module	Overhaul Kit	Banner Kit	Master Kit
KT	Rebuilding Kit - 5R55W, 5R55S - with 1 piston	02-On	137750AHP	137802	NA	137903HP

MISCELLANEOUS GASKETS & KIT COMPONENTS

ILL	ALTO No.	REF No.	Description	Spec	Year	Qty	Notes
N I	137816	XW4Z-7A191CA	Gasket, Oil pan - 5R55N	M.Rubber	99-02	1	
N I	137818	1L2Z-7A191BA	Gasket, Oil pan - 5R55W, 5R55S	M.Rubber	02-On	1	

FRICTION CLUTCHES

ILL	ALTO No.	REF No.	Description	Spec	Year	Qty	Notes
N I	137700-170	8R2Z-7B164B	Forward	.068/1.7	99-On	4-5	HEG - 89T - OD: 5.231" - SP
N I	137702-205	XW4Z-7B164BA	Direct (1 sided)- internal spline	.081/2.1	99-On	4-5	HEG - 48T - OD: 4.893" - SP
N I	137703-205	XW4Z-7B442BA	Direct (1 sided) - external spline	.081/2.1	99-On	4-5	HEG - 20T - ID: 3.970" - SP
N I	137704-245	XW4Z-7B164CA	Intermediate (1 sided) - internal spline (5R55N only)	.096/2.45	99-02	3-4	HEG - 24T - OD: 5.708" - SP
N I	137705-245	XW4Z-7B442CA	Intermediate (1 sided) - external spline (5R55N only)	.096/2.45	99-02	3-4	HEG - 33T - ID: 4.323" - SP
N I	041714A	F77Z-7B164CA	Overdrive/Coast	.069/1.75	99-On	2	Tan - 16T - OD: 4.894" - SP
N I	138730-195	NA	Transfer Case (BW4405) (1 sided) - internal teeth	.078	99-On	5	Tan - 19T - OD: 5.590" - PL
N I	138731-195	NA	Transfer Case (BW4405) (1 sided) - external teeth	.078	99-On	6	Tan - 31T - ID: 4.727" - PL
N I	138730	NA	Transfer Case (BW4406) (1 sided) - internal teeth	.065	99-On	5	Tan - 19T - OD: 5.590" - PL
N I	138731	NA	Transfer Case (BW4406) (1 sided) - external teeth	.065	99-On	7	Tan - 31T - ID: 4.727" - PL

FRICTION CLUTCHES - HI-PERFORMANCE - Red Eagle®

ILL	ALTO No.	REF No.	Description	Spec	Year	Qty	Notes
N I	137740-170	NA	Forward	.068/1.7	99-On	4-5	Red - 89T - OD: 5.231" - SP
N I	137742A205	NA	Direct (1 sided)- internal spline	.081/2.1	99-On	4-5	Red - 48T - OD: 4.893" - SP
N I	137743A205	NA	Direct (1 sided) - external spline	.081/2.1	99-On	4-5	Red - 20T - ID: 3.970" - SP
N I	041744A	NA	Overdrive/Coast	.069/1.75	99-On	2	Red - 16T - OD: 4.894" - SP

STEEL CLUTCHES

ILL	ALTO No.	REF No.	Description	Spec	Year	Qty	Notes
N I	137701-167	XW4Z-7B442AB	Forward	.067	99-On	5	27T - ID: 4.638"
N I	041711	F0TZ-7B442B	Overdrive/Coast	.065/1.65	99-On	2	20T - ID: 3.970"

STEEL CLUTCHES - HI-PERFORMANCE - Kolene®

ILL	ALTO No.	REF No.	Description	Spec	Year	Qty	Notes
N I	137701K167	NA	Forward	.067	99-On	5	27T - ID: 4.638"
N I	041711K	NA	Overdrive/Coast	.065/1.65	99-On	2	20T - ID: 3.970"

PRESSURE PLATES

ILL	ALTO No.	REF No.	Description	Spec	Year	Qty	Notes
N I	137761-390	XW4Z-7B066B	Forward - backing	.154	99-On	1	
N I	TBA	F0TZ-7B066B	Direct - backing	.200	99-On	1	
N I	TBA	NA	Intermediate - apply (stepped)	.360	99-On	1	
N I	TBA	F0TZ-7B066A	Overdrive - backing	.200	99-On	1	

FORD

5R55N 1999-2002, 5R55W 2002-On
5R55S 2003-On

BANDS

ILL	ALTO No.	REF No.	Description	Spec	Year	Qty	Notes
N I	041950	XW4Z-7D034BA	Intermediate - 5R55N		99-On	1	
N I	041950	XW4Z-7D034BA	Overdrive - 5R55N		99-On	1	
N I	137950	XW4Z-7D034BA	Intermediate & Overdrive - 5R55S/W	Red	99-On	1	
N I	137952	1L2Z-7D034AA	Intermediate & Overdrive - 5R55W	Black	99-On	1	
N I	137952	1L2Z-7D034AA	Intermediate & Overdrive - 5R55S	Black	99-On	1	
N I	137951	XW4Z-7D095AA	Reverse Brake		99-On	1	

BANDS - HI-PERFORMANCE - Red Eagle®

ILL	ALTO No.	REF No.	Description	Spec	Year	Qty	Notes
N I	137960	NA	Intermediate & Overdrive - 5R55S/W with heat treated anchors	Red	99-On	1	Red Eagle®
N I	137960C	NA	Intermediate & Overdrive - 5R55S/W with heat treated anchors	Carbon	99-On	1	Carbonite®

FILTERS

ILL	ALTO No.	REF No.	Description	Spec	Year	Qty	Notes
N I	137940	XW4Z-7A098AA	Filter - 5R55N		99-02	1	
N I	137941	1L2Z-7A098AB	Filter - 5R55W		02-On	1	
N I	137942	3W4Z-7A098AB	Filter - 5R55S		03-On	1	1" pickup

METAL CLAD SEALS

ILL	ALTO No.	REF No.	Description	Spec	Year	Qty	Notes
N I	041400B	F77Z-7A248AA	Front Pump		99-On	1	
N I	041405B	XW4S-7052AA	Extension Housing - 5R55N	2.362	99-On	1	
N I	049406	F6UZ-7052A	Extension Housing - 5R55W		02-On	1	
N I	041407	1L2Z-7052BA	Extension Housing - 5R55W		02-On	1	
N I	023406	D5AZ-7B498A	Manual Lever		99-On	1	

SEALING RINGS

ILL	ALTO No.	REF No.	Description	Spec	Year	Qty	Notes
KT	137601	NA	Sealing Ring Kit		99-On	1	
N I	041100A	E5TZ-7D025A	Front Pump Support to Overdrive drum	Teflon	99-On	2	
N I	041103	F77Z-7L323A	Front Pump Support - front	Teflon	99-On	1	
N I	TBA	XW4Z-7D019BA	Output Shaft	Teflon	99-On	1	

PISTONS

ILL	ALTO No.	REF No.	Description	Spec	Year	Qty	Notes
N I	137330	XW4Z-7E005BA	Bonded Piston - Intermediate Clutch		99-On	1	
N I	137331	1L2Z-7A262AA	Bonded Piston - Forward Clutch		02-On	1	
N I	137331A	XW4Z-7B070AA	Bonded Piston - Forward Clutch Cushion		99-On	1	
N I	137332	XW4Z-7D021HA	Bonded Piston - Intermediate Servo	2.879"/2.757"	99-On	1	Green Dot
N I	137333	XW4Z-7D021JA	Bonded Piston - Intermediate Servo	2.879"/2.561"	99-On	1	Yellow Dot
N I	137334	1L2Z-7D021CA	Bonded Piston - Intermediate Servo	3.505"/2.820"	02-On	1	Pink Dot

HARD PARTS

ILL	ALTO No.	REF No.	Description	Spec	Year	Qty	Notes
N I	183320	BW-SP-4	Sprag, Torque Converter	18 element	99-On	1	

FORD

5R110W 2003-2010
Torqshift 2005-2010

KITS

*Add Suffix SK for Super Kit

ILL	Description	Years	Friction Module	Steel Module	Overhaul Kit	Banner Kit	Master Kit
KT	Rebuilding Kit with Pistons	03-04	166752	166753	166800	166901LS	166901
KT	Rebuilding Kit without Pistons	03-04	166752	166753	166800X	166901XLS	166901X
KT	Rebuilding Kit with Pistons	05-10	166752A	166753A	166800	166901ALS	166901A
KT	Rebuilding Kit without Pistons	05-10	166752A	166753A	166800X	166901AXLS	166901AX

KITS - HI-PERFORMANCE with PowerPack®

ILL	Description	Years	Friction and Steel Module	Overhaul Kit	Banner Kit	Master Kit
KT	Rebuilding Kit with Forward & Direct PowerPacks®	03-04	166750BHP	166800X	NA	166901HP
KT	Rebuilding Kit with Forward & Direct PowerPacks®	05-10	166750CHP	166800X	NA	166901AHP
KT	Rebuilding Kit PowerPacks® with Pistons	03-04	166750BHP	166800X	NA	166901BHP
KT	Rebuilding Kit PowerPacks® with Pistons	05-On	166750CHP	166800X	NA	166901CHP

MISCELLANEOUS GASKETS & KIT COMPONENTS

ILL	ALTO No.	REF No.	Description	Spec	Year	Qty	Notes
N I	166001	3C3Z-7H200AA	Gasket, VB Lower		03-10	1	
N I	166002	3C3Z-7C155DA	Gasket, VB Upper		03-10	1	
N I	166003	3C3Z-7223AA	Gasket, PTO Cover		03-10	1	
N I	166004	3C3Z-7A136AA	Gasket, Pump		03-10	1	
N I	166816	F6TZ-7A191A	Gasket, Pan	Cork/Rub	03-10	1	
N I	166818	3C3Z-7086AA	Gasket, Ext Hsg		03-10	1	

FRICTION CLUTCHES

ILL	ALTO No.	REF No.	Description	Spec	Year	Qty	Notes
N I	026722ASM	3C3Z-7B164AA	Overdrive Brake	.078/1.98	03-10	3	Tan - 32T - OD: 8.691" - SM
N I	166706A198	3C3Z-7B164FA	Coast	.078/1.98	03-10	4	G3 - 59T - OD: 6.596" - SB
N I	166706-198	3C3Z-7B164FA	Coast	.078/1.98	03-10	3	HEG - 59T - OD: 6.596" - SB
N I	166708-198	3C3Z-7B164EB	Intermediate	.078/1.98	03-04	3	HEG - 24T - OD: 7.795" - SB
N I	166708A193	5C3Z-7B164AA	Intermediate	.078/1.98	05-10	4	HEG - 96T - OD: 7.795" - SB
N I	166702-198	3C3Z-7B164DA	Direct	.078/1.98	03-10	4	HEG - 48T - OD: 6.266" - SB
N I	026720A198	3C3Z-7B164BA	Forward	.078/1.98	03-04	4	HEG - 90T - OD: 6.358" - SB
N I	166700-196	5C3Z-7B164BA	Forward	.078/1.98	05-10	4	HEG - 76T - OD: 6.379" - SB
N I	026734A198	3C3Z-7B164CA	Low / Reverse	.078/1.98	03-10	6	HEG - 72T - OD: 6.796" - WF
N I	026714A198	3C3Z-7B164CA	Low / Reverse	.078/1.98	03-10	4	G3 - 72T - OD: 6.796" - WF

FRICTION CLUTCHES - HI-PERFORMANCE

ILL	ALTO No.	REF No.	Description	Spec	Year	Qty	Notes
N I	166704-198	NA	Overdrive - PowerPack® component	.078/1.98	03-10	5	G3BK - 32T - OD: 8.691"
N I	166708B198	NA	Intermediate - PowerPack® component	.078/1.98	03-04	5	G3BK - 24T - OD: 7.795"
N I	166708C193	NA	Intermediate - PowerPack® component	.076/1.93	05-10	5	G3BK - 96T - OD: 7.795"
N I	166702B160	NA	Direct - PowerPack® component	.063/1.60	03-10	6	G3BK - 48T - OD: 6.270"
N I	026720B155	NA	Forward - PowerPack® component	.061/1.55	03-04	5	G3BK - 90T - OD: 6.362"
N I	166700B150	NA	Forward - PowerPack® component	.059/1.50	05-10	5	G3BK - 76T - OD: 6.379"
N I	026744B	NA	Low / Reverse to fit over planetary	.078/1.98	05-10	6	G3BK - 48T - OD: 6.900"

STEEL CLUTCHES

ILL	ALTO No.	REF No.	Description	Spec	Year	Qty	Notes
N I	166705-200	3C3Z-7B442AA	Overdrive Brake	.081/2.06	03-10	3	6T - ID: 7.455"
N I	166707-200	3C3Z-7B442EA	Coast	.078/1.98	03-10	3	32T - ID: 5.850"
N I	166709-315	3C3Z-7B442BA	Intermediate	.125/3.18	03-04	3	26T - ID:6.500"
N I	166709-295	5C3Z-7B442AA	Intermediate	.116/2.95	05-10	4	26T - ID:6.500"

FORD

5R110W 2003-2010
Torqshift 2005-2010

STEEL CLUTCHES

ILL	ALTO No.	REF No.	Description	Spec	Year	Qty	Notes
N I	166703-203	3C3Z-7B442CA	Direct	.080/2.03	03-10	4	28T - ID:5.120"
N I	166703-203	3C3Z-7B442CA	Forward	.080/2.03	03-04	4	28T - ID:5.120"
N I	166701-203	5C3Z-7B442BB	Forward	.080/2.03	05-10	4	28T - ID:5.380"
N I	026703	3C3Z-7B442DA	Low / Reverse	.068/1.73	03-10	6	18T - ID:5.697"

STEEL CLUTCHES - HI-PERFORMANCE - Kolene®

ILL	ALTO No.	REF No.	Description	Spec	Year	Qty	Notes
N I	026723K200	NA	Overdrive Brake	.078/1.98	03-10	3	Kol - 6T - ID: 7.467"
N I	166707K200	NA	Coast	.078/1.98	03-10	3	Kol - 32T - ID: 5.850"
N I	166709K315	NA	Intermediate	.125/3.18	03-04	3	Kol - 26T - ID:6.500"
N I	166709K295	NA	Intermediate	.116/2.95	05-10	4	Kol - 26T - ID:6.500"
N I	166709K195	NA	Intermediate- Selective	.077/1.95	03-10	5	Kol - 26T - ID:6.500"
N I	166703K203	NA	Direct	.080/2.03	03-10	4	Kol - 28T - ID:5.120"
N I	166703K150	NA	Forward PowerPack® component	.059/1.50	03-04	4	Kol - 28T - ID:5.120"
N I	166703K203	NA	Forward PowerPack® component	.080/2.03	03-04	1	Kol - 28T - ID:5.120"
N I	166701K170	NA	Forward PowerPack® component	.067/1.70	05-10	5	Kol - 28T - ID:5.380"
N I	026703K	NA	Low/Reverse	.068/1.73	05-10	5	Kol - 18T - ID:5.697"
N I	026703BK	NA	Low/Reverse	.070/1.78	05-10	5	Kol - 18T - ID:5.855"

PRESSURE PLATES

ILL	ALTO No.	REF No.	Description	Spec	Year	Qty	Notes
N I	166765P116	3C3Z-7B066EA	Overdrive Brake	.459/11.65	04-10	1	
N I	166761-622	NA	Direct apply - PowerPack® component		03-10	1	
N I	166761A	5C3Z-7B066CA	Forward		05-10	1	
N I	166762	3C3Z-7B066AA	Direct		03-10	1	
N I	166762A	NA	Direct - PowerPack®		03-10	1	
N I	166763	3C3Z-7B066CB	Overdrive		03-10	1	
		3C3Z-7B066EA					
N I	166764	5C3Z-7A089BA	Coast		03-10	1	
N I	166765	3C3Z-7B066BA	Intermediate Diesel, V8 PowerPack®		03-10	1	
N I	166765A	5C3Z-7B066AA	Intermediate V10 PowerPack®		05-10	1	
N I	166765B	3C3Z-7B066BA	Intermediate Diesel, V8 PowerPack®		03-10	1	Stepped
N I	166766	3C3Z-7A089AB	Reverse - Diesel		03-10	1	
N I	166766	3C3Z-7A089AB	Reverse - Gas		03-04	1	
N I	166766A	5C3Z-7A089AA	Reverse - Gas		05-10	1	

OEI® Original Equipment Improvements

ILL	ALTO No.	REF No.	Description	Spec	Year	Qty	Notes
KT	166755	NA	PowerPack® - Overdrive		03-04	1	
KT	166756	NA	PowerPack® - Forward		03-04	1	
KT	166756A	NA	PowerPack® - Forward		05-10	1	
KT	166757	NA	PowerPack® - Direct (contains modified piston)		03-10	1	
KT	166758	NA	PowerPack® - Intermediate		03-04	1	
KT	166758A	NA	PowerPack® - Intermediate		05-10	1	

FILTERS

ILL	ALTO No.	REF No.	Description	Spec	Year	Qty	Notes
N I	166940	3C3Z-7A098AA	Filter		03-10	1	
N I	166940A	8C3Z-7A098D	Filter		08-On	1	
N I	166942	3C3Z-7B155BA	Filter- External Cartridge		03-10	1	includes oring

FORD

5R110W 2003-2010
Torqshift 2005-2010

FILTERS

N I	166942A	3C3P-7C012AA	Filter- OE Style		03-10	1	includes oring

SNAP RINGS

ILL	ALTO No.	REF No.	Description	Spec	Year	Qty	Notes
N I	026251-062	NA	Forward/Direct		03-10	1	

PISTONS

ILL	ALTO No.	REF No.	Description	Spec	Year	Qty	Notes
KT	166670	NA	Piston Kit		03-10	1	8 pistons
N I	166300	3C3Z-7A262AA	Forward		03-10	1	6-5/16" OD
N I	166301A	3C3Z-7A262BA	Direct		03-10	1	
N I	166301	NL	Direct - modified PowerPack® component		03-10	1	
N I	166302	3C3Z-7A262CA	Coast		03-04	1	
N I	166303	3C3Z-7E005AA	Intermediate		03-10	1	7.5" OD
N I	166304	3C3Z-7H359AA	Direct Balance		03-10	1	
N I	166305	3C3Z-7H360AA	Forward Balance		03-10	1	5-13/16" OD
N I	166306	3C3Z-7A262DA	Overdrive		03-10	1	
N I	166306A	NL	Overdrive- modified PowerPack® component		03-10	1	
N I	166307	3C3Z-7D402AA	Low/Reverse		03-10	1	

METAL CLAD SEALS

ILL	ALTO No.	REF No.	Description	Spec	Year	Qty	Notes
N I	166400	3C3Z-7A248AA	Front Pump		03-10	1	
N I	166405A	3C3Z-7052CA	Ext Hsg 2WD		03-10	1	
N I	166405B	3C3Z-7052BA	Ext Hsg 4WD		03-10	1	

ELECTRONIC CONTROL COMPONENTS

ILL	ALTO No.	REF No.	Description	Spec	Year	Qty	Notes
N I	166501	4C3P-7G383AA	Solenoid EPC		03-10	1	

FORD

FORD 6F50 / 6F55 6 Speed 2007-On
GM 6T70, 6T75 6 Speed 2007-On

KITS

*Add Suffix SK for Super Kit

ILL	Description	Years	Friction Module	Steel Module	Overhaul Kit	Banner Kit	Master Kit
KT	Rebuilding Kit - with Molded Pistons	07-On	196752	196753	196800	196901LS	196901
KT	Rebuilding Kit - without Molded Pistons	07-On	196752	196753	196800X	196901XLS	196901X

FRICTION CLUTCHES

ILL	ALTO No.	REF No.	Description	Spec	Year	Qty	Notes
N I	196702-157	NA	4, 5, 6 Clutch	.062/1.57	07-On	6	Heg - 24T - OD: 4.872" - SB
N I	196704-157	NA	3, 5, Reverse Clutch - external spline	.062/1.57	07-On	4	Heg - 36T - ID: 5.628" - SB
N I	196700-152	NA	2, 6 Clutch	.060/1.52	07-On	3	Heg - 36T - OD: 8.234" - SB
N I	196706-157	NA	#1 Brake Clutch	.060/1.52	07-On	4	Heg - 48T - OD: 8.622" - PLNI
N I	196708-160	24223700	Low Reverse Clutch	.063/1.6	07-On	2	Heg - 36T - OD: 8.187" - SB

STEEL CLUTCHES

ILL	ALTO No.	REF No.	Description	Spec	Year	Qty	Notes
N I	196703-173	NA	4, 5, 6 Clutch	.068/1.73	07-On	6	36T - ID: 3.929"
N I	196705-292	NA	3, 5, Reverse Clutch - internal spline	.115/2.92	07-On	4	36T - OD: 6.588"
N I	196701-290	NA	2, 6 Clutch	.114/2.9	07-On	3	5T - ID: 7.194"
N I	196707-173	NA	#1 Brake Clutch	.068/1.73	07-On	3	10T - ID: 7.755"
N I	196709-216	24223699	Low Reverse Clutch	.085/2.16	07-On	2	12T - ID: 6.880"

FILTERS

ILL	ALTO No.	REF No.	Description	Spec	Year	Qty	Notes
N I	196940	24223670	Filter		07-On	1	

MOLDED PISTONS

ILL	ALTO No.	REF No.	Description	Spec	Year	Qty	Notes
N I	196670	NA	Piston kit		07-On	1	contains 5 pistons
N I	196300	24223887	2-6 clutch		07-On	1	
N I	196301	24223884	Low-Reverse clutch		07-On	1	
N I	196302	24223803	3-5-Reverse clutch		07-On	1	
N I	196303	24231514	4-5-6 clutch		07-On	1	
N I	196304	NA	1-2-3-4 clutch		07-On	1	

FORD

FORD 6R60

2006-On

KITS

*Add Suffix SK for Super Kit

ILL	Description	Years	Friction Module	Steel Module	Overhaul Kit	Banner Kit	Master Kit
KT	Rebuilding Kit	06-On	183752A	183753A	183802	183903LS	183903

FRICTION CLUTCHES

ILL	ALTO No.	REF No.	Description	Spec	Year	Qty	Notes
N I	183700-160	6L2Z-7B164AA	Input (A Forward) clutch	.063/1.6	06-On	4	HEG - 30T - OD: 7.370" - PLNI
N I	183700-208	6L2Z-7B164BA	Direct (B) clutch	.082/2.08	06-On	4	HEG - 30T - OD: 7.370" - PLNI
N I	183700-208	6L2Z-7B164BA	2nd Brake, 6th Brake (C Intermed) clutch	.082/2.08	06-On	4	HEG - 30T - OD: 7.370" - PLNI
N I	183700-208	6L2Z-7B164BA	Low & Reverse (D) clutch	.082/2.08	06-On	4	HEG - 30T - OD: 7.370" - PLNI
N I	183700-220	NA	Input, Direct, 2nd Brk, Low/Rev selective	.087/2.2	06-On	AR	HEG - 30T - OD: 7.370" - PLNI
N I	183702-160	6L2Z-7B164CA	Overdrive (E) clutch	.063/1.6	06-On	6	HEG - 30T - OD: 5.150" - PLNI
N I	183702A160	6L2Z-7B164CA	Overdrive (E) clutch	.063/1.6	06-On	6	SAS - 30T - OD: 5.150" - PLNI
N I	183702-200	NA	Overdrive (E) clutch selective	.079/2.0	06-On	AR	HEG - 30T - OD: 5.150" - SB
N I	183702A200	NA	Overdrive (E) clutch selective	.079/2.0	06-On	AR	SAS - 30T - OD: 5.150" - SB

STEEL CLUTCHES

ILL	ALTO No.	REF No.	Description	Spec	Year	Qty	Notes
N I	183701-300	6L2Z-7B442CA	Input (A Forward) clutch	.118/3.0	06-On	5	30T - ID: 6.450"
N I	183701-208	6L2Z-7B442BA	Direct (B) clutch	.082/2.08	06-On	4	30T - ID: 6.450"
N I	183701-208	6L2Z-7B442BA	2nd Brake, 6th Brake (C Intermed) clutch	.082/2.08	06-On	4	30T - ID: 6.450"
N I	183701-300	6L2Z-7B442CA	Low & Reverse (D) clutch	.118/3.0	06-On	4	30T - ID: 6.450"
N I	183701-240	NA	Input, Direct, 2nd Brk, Low/Rev selective	.095/2.4	06-On	AR	30T - ID: 6.450"
N I	183701-267	NA	Input, Direct, 2nd Brk, Low/Rev selective	.105/2.67	06-On	AR	30T - ID: 6.450"
N I	183701-330	NA	Input, Direct, 2nd Brk, Low/Rev selective	.130/3.3	06-On	AR	30T - ID: 6.450"
N I	183701-360	NA	Input, Direct, 2nd Brk, Low/Rev selective	.142/3.6	06-On	AR	30T - ID: 6.450"
N I	183701-390	NA	Input, Direct, 2nd Brk, Low/Rev selective	.154/3.9	06-On	AR	30T - ID: 6.450"
N I	183703-300	6L2Z-7B442AA	Overdrive (E) clutch	.118/3.0	06-On	7	24T - ID: 4.200"
N I	183703-240	NA	Overdrive (E) clutch selective	.095/2.4	06-On	AR	24T - ID: 4.200"

FILTERS

ILL	ALTO No.	REF No.	Description	Spec	Year	Qty	Notes
N I	183946	6L2Z-7A098AA	Filter		06-On	1	

BUSHINGS & BEARINGS

ILL	ALTO No.	REF No.	Description	Spec	Year	Qty	Notes
KT	183625A	NA	Bushing Kit (11)		06-On	1	Bronze
KT	183625AB	NA	Bushing Kit (11)		06-On	1	Bi-Metal
KT	183200	NA	A Clutch - Large		06-On	1	Bi-Metal
KT	183200X	NA	A Clutch - Large		06-On	1	Bronze
KT	183201	NA	A Clutch - Small		06-On	1	Bi-Metal
KT	183201X	NA	A Clutch - Small		06-On	1	Bronze
KT	183202	NA	Front		06-On	1	Bi-Metal
KT	183202X	NA	Front		06-On	1	Bronze
KT	183203	NA	B Clutch		06-On	2	Bi-Metal
KT	183203X	NA	B Clutch		06-On	2	Bronze
KT	183205	NA	A Clutch Hub		06-On	2	Bi-Metal
KT	183205X	NA	A Clutch Hub		06-On	2	Bronze
KT	183206	NA	Pilot		06-On	2	Bi-Metal
KT	183206X	NA	Pilot		06-On	2	Bronze
KT	183208	NA	Rear		06-On	1	Bi-Metal
KT	183208X	NA	Rear		06-On	1	Bronze

FORD

FORD 6R60

2006-On

BUSHINGS & BEARINGS

KT	183235	NA	Bearing - Pump Needle Sleeve		06-On	1	

HARD PARTS

ILL	ALTO No.	REF No.	Description	Spec	Year	Qty	Notes
KT	183570	NA	Solenoid Kit		06-On	1	

FORD

FORD 6R80

2007-On

KITS

*Add Suffix SK for Super Kit

ILL	Description	Years	Friction Module	Steel Module	Overhaul Kit	Banner Kit	Master Kit
KT	Rebuilding Kit	07-On	183752B	183753B	183804	183905LS	183905

KITS - SPECIALTY KIT WITH POWERPACK

ILL	Description	Years	Friction and Steel Module	Overhaul Kit	Master Kit
KT	Rebuilding Kit	07-On	183750PWR	183804	183905PWR

FRICTION CLUTCHES

ILL	ALTO No.	REF No.	Description	Spec	Year	Qty	Notes
N I	183700-160	6L2Z-7B164AA	Input (A Forward) clutch	.063/1.6	07-On	5	HEG - 30T - OD: 7.370" - PLNI
N I	183700A160	NA	A,B,C,D clutch	.063/1.6	02-On	27	G3 BLK - 30T - OD: 7.370" - PLNI
N I	183700-208	6L2Z-7B164BA	Direct (B) clutch	.082/2.08	07-On	5	HEG - 30T - OD: 7.370" - PLNI
N I	183700-220	NA	2nd Brake, 6th Brake (C Intermed) clutch	.087/2.2	07-On	5	HEG - 30T - OD: 7.370" - PLNI
N I	183700-160	6L2Z-7B164AA	Low & Reverse (D) clutch	.063/1.6	07-On	6	HEG - 30T - OD: 7.370" - PLNI
N I	183702-160	NA	Overdrive (E) clutch selective	.063/1.6	07-On	AR	HEG - 30T - OD: 5.150" - PLNI
N I	183702A160	NA	Overdrive (E) clutch selective	.063/1.6	07-On	AR	SAS - 30T - OD: 5.150" - PLNI
N I	183702-200	NA	Overdrive (E) clutch	.079/2.0	07-On	6	HEG - 30T - OD: 5.150" - SB
N I	183702A200	NA	Overdrive (E) clutch	.079/2.0	07-On	6	SAS - 30T - OD: 5.150" - SB
N I	183702A160	NA	E clutch	.063/1.6	02-On	9	G3 BLK - 30T - OD: 5.150" - PLNI

STEEL CLUTCHES

ILL	ALTO No.	REF No.	Description	Spec	Year	Qty	Notes
N I	183701-173	NA	A,B,C,D clutch	.068/1.73	02-On	20	30T - ID: 6.450"
N I	183701-208	6L2Z-7B442BA	Direct (B) clutch	.082/2.08	07-On	5	30T - ID: 6.450"
N I	183701-208	6L2Z-7B442BA	Low & Reverse (D) clutch	.082/2.08	07-On	6	30T - ID: 6.450"
N I	183701-240	NA	Input, Direct, 2nd Brk, Low/Rev selective	.095/2.4	07-On	AR	30T - ID: 6.450"
N I	183701-267	NA	Input, Direct, 2nd Brk, Low/Rev selective	.105/2.67	07-On	AR	30T - ID: 6.450"
N I	183701-300	6L2Z-7B442CA	2nd Brake, 6th Brake (C Intermed) clutch	.118/3.0	07-On	5	30T - ID: 6.450"
N I	183701-300	6L2Z-7B442CA	Input (A Forward) clutch	.118/3.0	07-On	6	30T - ID: 6.450"
N I	183701-330	NA	Input, Direct, 2nd Brk, Low/Rev selective	.130/3.3	07-On	AR	30T - ID: 6.450"
N I	183701-360	NA	Input, Direct, 2nd Brk, Low/Rev selective	.142/3.6	07-On	AR	30T - ID: 6.450"
N I	183701-390	NA	Input, Direct, 2nd Brk, Low/Rev selective	.154/3.9	07-On	AR	30T - ID: 6.450"
N I	183703-300	6L2Z-7B442AA	Overdrive (E) clutch	.118/3.0	07-On	6	24T - ID: 4.200"
N I	183703-240	NA	Overdrive (E) clutch selective	.095/2.4	07-On	AR	24T - ID: 4.200"
N I	183703-160	NA	E clutch	.063/1.6	02-On	8	24T - ID: 4.200"

TORQUE CONVERTER-FRICTION RINGS AND CLUTCHES

ILL	ALTO No.	REF No.	Description	Spec	Year	Qty	Notes
N I	183718A	NA	Torque Converter Friction	.167/4.24	07-On	1	G3C - 40T - ID: 8.706" - Bent Teeth

FILTERS

ILL	ALTO No.	REF No.	Description	Spec	Year	Qty	Notes
N I	183944	7L1Z-7A098A	Filter		07-On	1	

SNAP RINGS

ILL	ALTO No.	REF No.	Description	Spec	Year	Qty	Notes
N I	183250	NA	Snap Ring		07-On	1	

FORD

FORD 6R80

2007-On

BUSHINGS

ILL	ALTO No.	REF No.	Description	Spec	Year	Qty	Notes
KT	183625A	NA	Bushing Kit (11)		06-On	1	Bronze
KT	183625AB	NA	Bushing Kit (11)		06-On	1	Bi-Metal
KT	183200	NA	A Clutch - Large		06-On	1	Bi-Metal
KT	183200X	NA	A Clutch - Large		06-On	1	Bronze
KT	183201	NA	A Clutch - Small		06-On	1	Bi-Metal
KT	183201X	NA	A Clutch - Small		06-On	1	Bronze
KT	183202	NA	Front		06-On	1	Bi-Metal
KT	183202X	NA	Front		06-On	1	Bronze
KT	183203	NA	B Clutch		06-On	2	Bi-Metal
KT	183203X	NA	B Clutch		06-On	2	Bronze
KT	183205	NA	A Clutch Hub		06-On	2	Bi-Metal
KT	183205X	NA	A Clutch Hub		06-On	2	Bronze
KT	183206	NA	Pilot		06-On	2	Bi-Metal
KT	183206X	NA	Pilot		06-On	2	Bronze
KT	183208	NA	Rear		06-On	1	Bi-Metal
KT	183208X	NA	Rear		06-On	1	Bronze
N I	183211	NA	Front Pump		07-On	1	Bi-Metal

HARD PARTS

ILL	ALTO No.	REF No.	Description	Spec	Year	Qty	Notes
N I	183570	NA	Solenoid Kit		07-On	1	
N I	A70066	NA	Valve Body - 6R80		07-On	1	

FORD

6R140 2011-On

Ford Truck 6.7L Diesel, 6.2L Gas

KITS

*Add Suffix SK for Super Kit

ILL	Description	Years	Friction Module	Steel Module	Overhaul Kit	Banner Kit	Master Kit
KT	Rebuilding Kit - with Molded Pistons	11-On	206752	206753	206800	206901LS	206901
KT	Rebuilding Kit - without Molded Pistons	11-On	206752	206753	206800X	206901XLS	206901X

KITS - HI-PERFORMANCE with PowerPack®

ILL	Description	Years	Friction and Steel Module	Overhaul Kit	Banner Kit	Master Kit
KT	Rebuilding Kit - with Direct, Overdrive, 2-6 Intermediate PowerPack®, with Pistons	11-On	206750APWR	206800X	NA	206901APWR
KT	Rebuilding Kit - with Direct, Overdrive, 2-6 Intermediate PowerPack®, without Pistons	11-On	206750APWR	206800X	NA	206901AXPWR

FRICTION CLUTCHES

ILL	ALTO No.	REF No.	Description	Spec	Year	Qty	Notes
N I	206700-160	NA	Input Clutch	.063/1.6	11-On	5	HEG - 32T - OD: 8.080" - SB
N I	206702-211	NA	Direct Clutch	.083/2.11	11-On	5	HEG - 32T - OD: 8.520" - SB
N I	206702A173	NA	Direct Clutch- PowerPack® component	.068/1.73	11-On	6	G3BK - 32T - OD: 8.520" - SEG
N I	206702-211	NA	2nd/6th Brake Clutch	.083/2.11	11-On	5	HEG - 32T - OD: 8.520" - SB
N I	206702-163	NA	2nd/6th Brake Clutch	.063/1.63	11-On	7	HEG - 32T - OD: 8.524" - SB
N I	206702A173	NA	2nd/6th Brake Clutch - PowerPack® component	.068/1.73	11-On	7	G3BK - 32T - OD: 8.520" - SEG
N I	206706-160	NA	Low/Reverse Clutch	.063/1.6	11-On	5	HEG - 96T - OD: 8.760" - SB
N I	206706-173	NA	Low/Reverse Clutch	.068/1.73	11-On	5	HEG - 96T - OD: 8.760" - SB
N I	206708-193	NA	Overdrive Clutch	.076/1.93	11-On	7	HEG - 32T - OD: 5.730" - SB
N I	206708-203	NA	Overdrive Clutch	.080/2.03	11-On	7	HEG - 32T - OD: 5.730" - SB
N I	206708A165	NA	Overdrive Clutch - PowerPack® component	.065/1.65	11-On	9	G3BK - 32T - OD: 5.730" - SEG

STEEL CLUTCHES

ILL	ALTO No.	REF No.	Description	Spec	Year	Qty	Notes
N I	206701-198	NA	Input Clutch	.078/1.98	11-On	5	24T - ID: 6.970"
N I	206703-300	NA	Direct Clutch	.118/3.0	11-On	1	40T - ID: 7.330"
N I	206703-163	NA	Direct Clutch - PowerPack® component	.064/1.63	11-On	7	40T - ID: 7.330"
N I	206703-211	NA	Direct Clutch - PowerPack® component	.083/2.11	11-On	5	40T - ID: 7.330"
N I	206705-300	NA	2nd/6th Brake Clutch	.118/3.0	11-On	5	38T - ID: 7.330"
N I	206707-201	NA	Low/Reverse Clutch	.079/2.01	11-On	4	27T - ID: 7.720"
N I	206709-198	NA	Overdrive Clutch	.078/1.98	11-On	7	28T - ID: 4.700"
N I	206709-173	NA	Overdrive Clutch - PowerPack® component	.068/1.73	11-On	9	28T - ID: 4.700"

OEI® Original Equipment Improvements- Hi-Performance

ILL	ALTO No.	REF No.	Description	Spec	Year	Qty	Notes
N I	206756	NA	PowerPack® - Direct Clutch		11-On	1	
N I	206757	NA	PowerPack® - 2-6 Int Clutch		11-On	1	
N I	206758	NA	PowerPack® - Overdrive Clutch		11-On	1	
N I	206304A	NA	Modified Molded Piston, Overdrive		11-On	1	

FILTERS

ILL	ALTO No.	REF No.	Description	Spec	Year	Qty	Notes
N I	206940	BC3P-7G186B	Filter		11-On	1	

PISTONS

ILL	ALTO No.	REF No.	Description	Spec	Year	Qty	Notes
N I	206670	NA	Piston Kit		11-On	1	
N I	206303	NA	Overdrive Retainer		11-On	1	
N I	206304A	NA	Modified Molded Piston, Overdrive		11-On	1	

FORD

FORD 6F35

2009-On

KITS

*Add Suffix SK for Super Kit

ILL	Description	Years	Friction Module	Steel Module	Overhaul Kit	Banner Kit	Master Kit
KT	Rebuilding Kit - with Molded Pistons	09-12	204752A	204753A	204802	204903LS	204903
KT	Rebuilding Kit - without Molded Pistons	09-12	204752A	204753A	204802X	204903XLS	204903X
KT	Rebuilding Kit - with Molded Pistons	13-On	204752C	204753A	204802A	204903ALS	204903A
KT	Rebuilding Kit - without Molded Pistons	13-On	204752C	204753A	204802AX	204903AXLS	204903AX

FRICTION CLUTCHES

ILL	ALTO No.	REF No.	Description	Spec	Year	Qty	Notes
N I	204700-178	CV6Z-7B164-B	Forward (1-2-3-4) clutch	.070	09-On	2	HEG - 36T - OD: 8.580" - PLNI
N I	204702-160	BB5Z-7B164-C	Low/Reverse	.063	09-12	3	HEG - 48T - OD: 8.540" - SB
N I	204702A163	NA	Low/Reverse	.063	13-On	3	G3 - 48T - OD: 8.540" - SB
N I	204700-178	CV6Z-7B164-C	Intermediate (2-6) clutch	.070	09-On	2	HEG - 36T - OD: 8.580" - PLNI
N I	204706-155	CV6Z-7B164-A	Overdrive (4-5-6) clutch	.061	09-On	5	HEG - 24T - OD: 4.800" - PLNI
N I	204708-160	CV6Z-7B164-D	Direct (3-5-Rev) clutch - external spline	.063	09-On	3	HEG - 36T - ID: 5.710" - PLNI

STEEL CLUTCHES

ILL	ALTO No.	REF No.	Description	Spec	Year	Qty	Notes
N I	204701A170	9L8Z-7B442A	Forward (1-2-3-4) clutch	.067	09-On	2	12T - ID: 7.420"
N I	204703A170	9L8Z-7B442C	Low/Reverse	.067	09-On	3	12T - ID: 7.650"
N I	204705-340	9L8Z-7B442B	Intermediate (2-6) clutch	.134	09-On	2	15T - ID: 7.480"
N I	204707A173	9L8Z-7B442E	Overdrive (4-5-6) clutch	.068	09-On	5	24T - ID: 3.780"
N I	204709A338	9L8Z-7B442D	Direct (3-5-Rev) clutch - internal spline	.133	09-On	3	24T - OD: 6.818"

FILTER

ILL	ALTO No.	REF No.	Description	Spec	Year	Qty	Notes
N I	204942	NA	Filter		13-On	1	

BUSHINGS

ILL	ALTO No.	REF No.	Description	Spec	Year	Qty	Notes
N I	204200	NA	Bushing - Case		09-On	1	Driver's side 38.8 x 35.2 x 21

PISTONS

ILL	ALTO No.	REF No.	Description	Spec	Year	Qty	Notes
KT	204671	NA	Piston Kit		09-On	1	5 pistons
N I	204300A	9L8Z-7A262A	Piston - Intermediate 2-6 Clutch		09-On	1	
N I	204301	24266145	Piston - Direct 3-5-Reverse Clutch		08-On	1	
N I	204302A	9L8Z-7E005A	Piston - Low/Reverse Clutch		09-On	1	
N I	204303A	9L8Z-7D402A	Piston - Overdrive 4-5, 5-6 Clutch		09-On	1	
N I	204304B	CV6Z-7H360A	Piston - Reverse 3-5 Clutch		09-On	1	

FORD

AOD 1980-93, AODE 1992-95
4R70E/W 1993-On, 4R75E/W 2004-On

A>

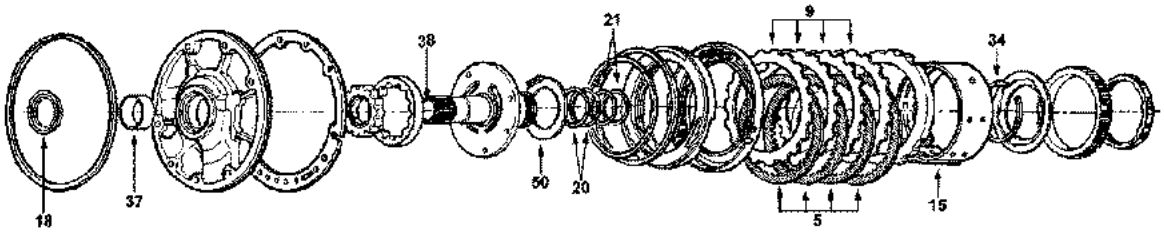

Intermediate Clutch

B>

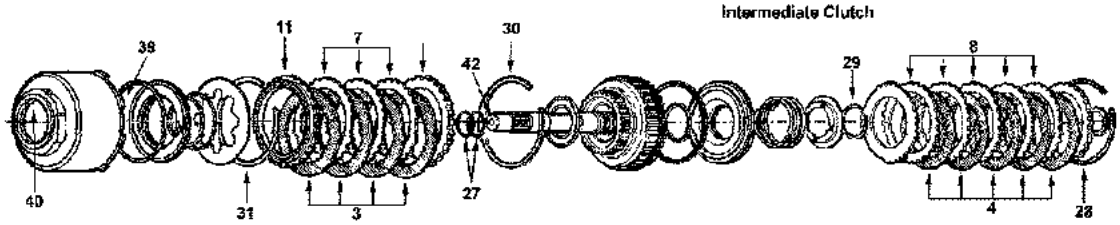

Reverse Clutch

Forward Clutch

C>

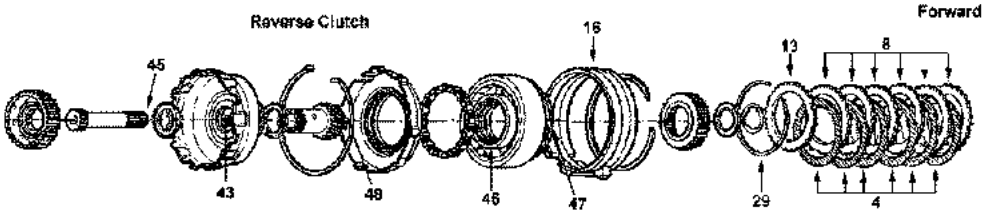

Direct Clutch

D>

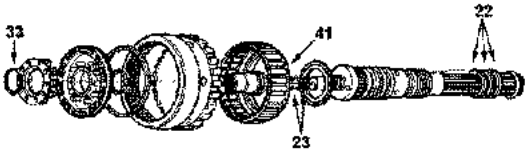

E>

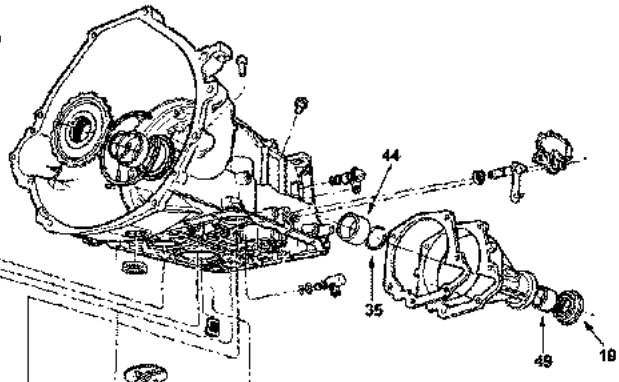

F>

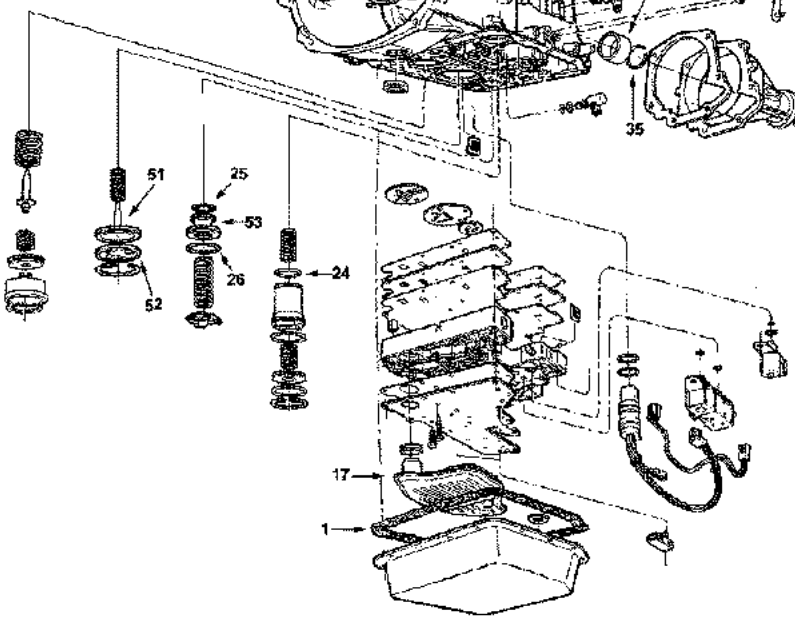

FORD

AOD 1980-93, AODE 1992-95
4R70E/W 1993-On, 4R75E/W 2004-On

KITS

*Add Suffix SK for Super Kit

ILL	Description	Years	Friction Module	Steel Module	Overhaul Kit	Banner Kit	Master Kit
KT	Rebuilding Kit - AOD	80-E83	049752F	049753	049800	049901LS	049901
KT	Rebuilding Kit - AOD	E83-90	049752G	049753	049800	049903LS	049903
KT	Rebuilding Kit - AOD (combo)	80-90	049752	049753	049800	049905LS	049905
KT	Rebuilding Kit - AOD with Grob steels	90-93	049752B	049753B	049800	049907LS	049907
KT	Rebuilding Kit - AOD (combo)	90-93	049752B	049753C	049800	049907LS	049907A
KT	Rebuilding Kit - AODE	92-95	049752C	049753K	049802	049909LS	049909
KT	Rebuilding Kit - 4R70W	93-95	049752D	049753E	049802	049909ALS	049909A
KT	Rebuilding Kit - 4R70W	96-97	049752H	049753H	049804A	049911LS	049911
KT	Rebuilding Kit - 4R70W	98-02	049752J	049753J	049804A	049911ALS	049911A
KT	Rebuilding Kit - 4R70W, 4R75W with 2 Molded Pistons	03-On	049752J	049753M	049806	049913LS	049913

KITS - Specialty Kit - with PowerPack®

ILL	Description	Years	Friction and Steel Module	Overhaul Kit	Banner Kit	Master Kit
KT	Rebuilding Kit - AOD with Direct PowerPack®	80-90	049750PWR	049800	NA	049905PWR
KT	Rebuilding Kit - AODE with Direct PowerPack®	92-95	049750DPWR	049802	NA	049909PWR

KITS - HI-PERFORMANCE with PowerPack®

ILL	Description	Years	Friction and Steel Module	Overhaul Kit	Banner Kit	Master Kit
KT	Rebuilding Kit - AOD with Direct PowerPack®	80-90	049750HPPWR	049800HP	NA	049905HPPWR
KT	Rebuilding Kit - AOD with Direct PowerPack®	90-93	049750APWR	049800HP	NA	049907BHP
KT	Rebuilding Kit - AODE with Direct PowerPack®	92-95	049750APWR	049802HP	NA	049909HPPWR
KT	Rebuilding Kit - 4R70W with Direct PowerPack®	96-02	049750K	049804A	NA	049911PWR
KT	Rebuilding Kit - AODE,4R70W with Direct	92-02	049750EHP	049802HP	NA	049909CHP
KT	Rebuilding Kit - 4R70W, 4R75W w/Direct	03-On	049750K	049806	NA	049913PWR

MISCELLANEOUS GASKETS & KIT COMPONENTS

ILL	ALTO No.	REF No.	Description	Spec	Year	Qty	Notes
1F	049816	E0AZ-7A191A	Gasket, Oil pan - AOD	Cork/Rub	80-93	1	
1F	049816A	NA	Gasket, Oil pan - AODE	Cork/Rub	92-On	1	
1F	049816B	F2VY-7A191A	Gasket, Oil pan - AODE	M.Rubber	92-On	1	
N I	010115B	87036-S94	Speedometer - AOD		80-93	1	
N I	032306C	E0AZ-7E195B	VB Checkball - .250"	Viton®	80-On	7	

FRICTION CLUTCHES

ILL	ALTO No.	REF No.	Description	Spec	Year	Qty	Notes
2B	049700	E0AZ-7B164A	Forward	.061	80-89	5	Tan - 45T - OD: 5.250" - PL
2B	049710	F8AZ-7B164AA	Forward - Grob drum	.061	90-On	5	HEG - 45T - OD: 5.359" - PL
2B	049700-250	NA	Forward - Selective	.098	80-89	AR	Tan - 45T - OD: 5.250" - PL
2B	049700BR	NA	Forward - Bronze clutch	.061	80-89	AR	Brz - 45T - OD: 5.250" - PL
3B	049702	E0AZ-7B164B	Reverse	.080	80-82	4	Tan - 45T - OD: 5.250" - PL
3B	049700	E0AZ-7B164A	Reverse	.061	83-On	5	Tan - 45T - OD: 5.250" - PL
3B	049720A147	NA	Reverse - PowerPack® Component	.058	80-89	AR	HEG - 45T - OD: 5.250" - PL
4C	049704	F1SV-7B164A	Direct	.075	80-98	5-6	HEG - 42T - OD: 4.654" - PL
4C	049714	F8AZ-7B164BA	Direct - 4R70W	.066	94-On	6	HEG - 42T - OD: 4.676" - PL
4C	049704A	NA	Direct - PowerPack® Component	.059	80-On	AR	Tan - 42T - OD: 4.654" - SM
5A	049706	E0AZ-7B164D	Intermediate - some	.080	80-97	3-4	Tan - 60T - OD: 7.062" - SM
5A	049706-170	F3LY-7B164A	Intermediate - some	.066	93-On	4	Tan - 60T - OD: 7.062" - SM
5A	049706A170	F75Z-7B164CA	Intermediate	.066	98-On	4	HEG - 60T - OD: 7.062" - PL
N I	138730-195	NA	Transfer Case (BW4405) (1 sided) - internal spline	.077	95-On	5	Tan - 19T - OD: 5.590" - PL
N I	138731-195	NA	Transfer Case (BW4405) (1 sided) - external spline	.077	95-On	6	Tan - 31T - ID: 4.727" - PL

FORD

AOD 1980-93, AODE 1992-95
4R70E/W 1993-On, 4R75E/W 2004-On

FRICTION CLUTCHES

ILL	ALTO No.	REF No.	Description	Spec	Year	Qty	Notes
N I	138730	NA	Transfer Case (BW4406) (1 sided) - internal spline	.065	97-On	6	Tan - 19T - OD: 5.590" - PL
N I	138731	NA	Transfer Case(BW4406) (1 sided) - external spline	.065	97-On	7	Tan - 31T - ID: 4.727" - PL

FRICTION CLUTCHES - HI-PERFORMANCE - Red Eagle®

ILL	ALTO No.	REF No.	Description	Spec	Year	Qty	Notes
2B	049740	NA	Forward & Reverse	.061	Various	5/4	Red - 45T - OD: 5.250" - SM
2B	049740PL	NA	Forward & Reverse - grooved	.061	Various	5/4	Red - 45T - OD: 5.250" - PL
2B	049740A	NA	Forward	.061	90-On	5	Red - 45T - OD: 5.359" - SM
3B	049742	NA	Reverse	.080	80-83	4	Red - 45T - OD: 5.250" - SM
4C	049744	NA	Direct	.075	80-On	5	Red - 42T - OD: 4.653" - SM
4C	049744A	NA	Direct - PowerPack® Component	.059	80-On	AR	Red - 42T - OD: 4.653" - SM
4C	049744APL	NA	Direct - thin	.059	80-On	AR	Red - 42T - OD: 4.653" - PL
4C	049744C170	NA	Direct - 4R70W	.066	80-On	6	Red - 42T - OD: 4.676" - PL
5A	049746	NA	Intermediate - some	.080	80-93	3-4	Red - 60T - OD: 7.062" - SM
5A	049746-170	NA	Intermediate - some	.066	92-On	4	Red - 60T - OD: 7.062" - SM

FRICTION CLUTCHES - HI-PERFORMANCE - UNIT PACKS (ONE Rebuild)

ILL	ALTO No.	REF No.	Description	Spec	Year	Qty	Notes
KT	049740UP5	NA	UNIT PACK - Forward & Reverse	.061	Various	1	5 Red Eagle® Frictions
KT	049742UP5	NA	UNIT PACK - Reverse	.080	80-83	1	5 Red Eagle® Frictions
KT	049744UP6	NA	UNIT PACK - Direct	.075	80-On	1	5 Red Eagle® Frictions
KT	049744AUP8	NA	UNIT PACK - Direct PowerPack® Comp.	.059	80-On	1	8 Red Eagle® Frictions
KT	049746UP3	NA	UNIT PACK - Intermediate	.080	80-97	1	3 Red Eagle® Frictions

STEEL CLUTCHES

ILL	ALTO No.	REF No.	Description	Spec	Year	Qty	Notes
6B	023701	C8AZ-7B442A	Forward - cast iron drum	.068	80-89	5	54T - ID: 3.898"
6B	023701-140	NA	Forward - selective Powerpack® Component	.055	80-89	AR	54T - ID: 3.900"
6B	049711	F0SZ-7B442A	Forward - Grob (stamped steel drum)	.069	90-On	5	34T - ID: 3.900"
7B	023701	C8AZ-7B442A	Reverse - cast iron drum	.068	80-89	3	54T - ID: 3.898"
7B	049711A	F2TZ-7B442A	Reverse - Grob (stamped steel drum)	.069	90-On	3	32T - ID: 3.900"
8C	049705	E0AZ-7B442A	Direct	.070	80-89	4	28T - ID: 3.662"
8C	049715	E9SZ-7B442A	Direct - Grob except Lincoln Mark & Truck	.070	90-99	5-6	34T - ID: 3.662"
8C	049715-200	F6AZ-7B442AA	Direct - Grob Lincoln Mark & Truck	.079	90-On	6	34T - ID: 3.662"
8C	049705A	NA	Direct - PowerPack® Component	.060	80-89	AR	28T - ID: 3.662"
8C	049715A	NA	Direct - PowerPack® Component	.060	90-On	AR	34T - ID: 3.662"
9A	049717-175	XL3Z-7B442AA	Intermediate 4R70W New Design retro fit	.069	80-On	3-4	18T - ID: 5.864"
9A	049717-200	XL3Z-7B442BA	Intermediate 4R70W Sel. New Design retro fit	.079	80-On	AR	18T - ID: 5.864"
9A	049717-225	XL3Z-7B442CA	Intermediate 4R70W Sel. New Design retro fit	.089	80-On	AR	18T - ID: 5.864"
9A	049717-250	XL3Z-7B442DA	Intermediate 4R70W Sel. New Design retro fit	.099	80-On	AR	18T - ID: 5.864"

STEEL CLUTCHES - HI-PERFORMANCE - Kolene®

ILL	ALTO No.	REF No.	Description	Spec	Year	Qty	Notes
6B	023701K	NA	Forward & Reverse	.068	80-89	5/3	Kol - 54T - ID: 3.900"
6B	049711K	NA	Forward - Grob (stamped steel drum)	.069	90-On	5	Kol - 34T - ID: 3.900"
7B	049711AK	NA	Reverse - Grob (stamped steel drum)	.069	90-On	3	Kol - 32T - ID: 3.900"
8C	049705K	NA	Direct	.070	80-89	4	Kol - 28T - ID: 3.662"
8C	049715K	NA	Direct -Grob except Lincoln Mark & Truck	.070	90-99	5-6	Kol - 34T - ID: 3.662"
8C	049715K200	NA	Direct - Grob Lincoln Mark & Truck	.079	90-On	6	Kol - 34T - ID: 3.662"
8C	049705AK	NA	Direct - PowerPack® Component	.060	80-89	AR	Kol - 28T - ID: 3.662"

FORD

AOD 1980-93, AODE 1992-95
4R70E/W 1993-On, 4R75E/W 2004-On

STEEL CLUTCHES - HI-PERFORMANCE - Kolene®

ILL	ALTO No.	REF No.	Description	Spec	Year	Qty	Notes
8C	049715AK	NA	Direct - PowerPack® Component	.059	90-On	AR	Kol - 34T - ID: 3.662"
9A	049717K175	NA	Intermediate	.069	80-On	3-4	Kol - 18T - ID: 5.864"

STEEL CLUTCHES - HI-PERFORMANCE - UNIT PACKS (ONE Rebuild)

ILL	ALTO No.	REF No.	Description	Spec	Year	Qty	Notes
KT	023701KUP4	NA	UNIT PACK - Forward & Reverse	.068	80-89	1	4 Kolene® Steels
KT	049711AKUP3	NA	UNIT PACK - Reverse	.069	90-On	1	3 Kolene® Steels
KT	049705KUP4	NA	UNIT PACK - Direct	.070	80-89	1	4 Kolene® Steels
KT	049705AKUP11	NA	UNIT PACK - Direct PowerPack® Comp.	.060	80-89	1	11 Kolene® Steels
KT	049715KUP6	NA	UNIT PACK - Direct (except Licoln & Truck)	.070	90-99	1	6 Kolene® Steels
KT	049715AKUP8	NA	UNIT PACK - Direct PowerPack® Comp.	.059	90-On	1	8 Kolene® Steels
KT	049713UP1	NA	UNIT PACK - Direct PowrPack® Comp.	.128	80-92	1	1 Pressure Plate
KT	049707KUP3	NA	UNIT PACK - Intermediate	.069	80-On	1	3 Kolene® Steels

PRESSURE PLATES

ILL	ALTO No.	REF No.	Description	Spec	Year	Qty	Notes
10B	TBA	E0AZ-7B066A	Forward, backing - AOD	.272	80-83	1	27T
10B	049760A500	E0AZ-7B066C	Forward, backing - AOD	.200	83-90	1	27T
10B	TBA	F0SZ-7B066A	Forward, backing - AOD	.264	90-93	1	
10B	049760B700	F0SZ-7B066B	Forward, backing - All	.275	90-On	1	34T
6B	023701-350	NA	Forward - PowerPack® Component	.138	80-89	AR	54T - ID: 3.900"
11B	023760	E0AZ-7B066B	Reverse, apply - AOD	.322	80-93	1	54T
11B	049764A944	F2TZ-7B066B	Reverse, apply - AODE / 4R70W		92-On	1	32T
12B	049760A500	E0AZ-7B066C	Reverse, backing - AOD	.200	80-93	1	27T
12B	049764-500	F2TZ-7B066A	Reverse, backing - AODE / 4R70W	.200	92-98	1	
12B	TBA	XL3Z-7B066AA	Reverse, backing - 4R70W	.323	99-On	1	
13C	049762	E0AZ-7B066E	Direct, apply - AOD	.219	80-92	1	
13C	049713	NA	Direct, apply - AOD PowerPack® Comp.	.128	80-92	1	Cast Iron Drum
13C	049723	NA	Direct, apply - AOD PowerPack® Comp.	.123	90-On	1	Grob (Stamped Steel Drum)
13C	TBA	E9SZ-7B066A	Direct, apply - AOD (Mustang) / AODE	.219	92-On	1	9T
13C	TBA	F7AZ-7B066AA	Direct, apply - AODE / 4R70W	.399	97-99	1	
13C	TBA	F7AZ-7B066BA	Direct, apply - AODE / 4R70W	.239	97-99	1	
14A	TBA	E0AZ-7B066D	Intermediate, apply - AOD	.406	80-89	1	8 cyl. engines
14A	TBA	E9SZ-7B066A	Intermediate, apply - AOD	.563	80-89	1	6 cyl. engines
14A	TBA	F2AZ-7B066A	Intermediate, apply - AOD / AODE	.406	90-99	1	(3 pack drum)
14A	TBA	F3LY-7B066A	Intermediate, apply - AODE / 4R70W	.255	94-On	1	(4 pack drum)
14A	049761D	F7AZ-7B066AA	Intermediate, apply - 4R70W	.338"	95-97	1	(4 pack drum)

OEI® Original Equipment Improvements

ILL	ALTO No.	REF No.	Description	Spec	Year	Qty	Notes
KT	049750A	NA	PowerPack® Direct (cast iron drum)		80-89	1	Increased capacity
KT	049754A	NA	PowerPack® Direct Grob (stamped drum)		90-On	1	Increased capacity
KT	049756	NA	Clearance Kit™, Intermediate Clutch		92-On	1	converts 3 pack into 4
KT	049758	NA	PowerPack® Reverse (Cast Iron Drum)		80-89	1	
KT	049758A	NA	PowerPack® Reverse Grob (Stamped)		90-On	1	
KT	049985	SK® AOD	Shift Kit® - AOD	Transgo®	80-93	1	
KT	049986	SK® AODE	Shift Kit® - AODE / 4R70W	Transgo®	92-On	1	

FORD

AOD 1980-93, AODE 1992-95
4R70E/W 1993-On, 4R75E/W 2004-On

OEI® Original Equipment Improvements - HI-PERFORMANCE

ILL	ALTO No.	REF No.	Description	Spec	Year	Qty	Notes
KT	049750AHP	NA	PowerPack® Direct (cast iron drum)		80-89	1	Red Eagle® & Kolene®
KT	049754AHP	NA	PowerPack® Direct Grob (stamped drum)		90-On	1	Red Eagle® & Kolene®
KT	049991	AOD-HP	Reprogramming Kit™ - AOD		80-93	1	Increase max. shift 5000+
KT	049991A	AODE-HD2	Reprogramming Kit™ - AODE		92-On	1	Hot Rod / Off road
KT	049991B	AODE-3	Reprogramming Kit™ - AODE		92-On	1	Full Manual - "Stick shift"

SHAFTS

ILL	ALTO No.	REF No.	Description	Spec	Year	Qty	Notes
N I	049382HP	F8AZ-7F351AA	Direct- 300M for Hi-Performance		92-On	1	

BANDS

ILL	ALTO No.	REF No.	Description	Spec	Year	Qty	Notes
15A	049950	E0AZ-7F196A	Overdrive - with Cast iron drum	1.500	80-90	1	Tan
15A	049951	F2TZ-7F196A	Overdrive - with Grob (stamped steel) drum	2.000	90-On	1	Tan
16C	049955	F0AZ-7D095A	Reverse - split band		80-On	1	Tan

BANDS - HI-PERFORMANCE - Red Eagle®

ILL	ALTO No.	REF No.	Description	Spec	Year	Qty	Notes
15A	049960	NA	Overdrive - with Cast iron drum	1.500	80-90	1	Red Eagle®
15A	049961	NA	Overdrive - with Grob (stamped steel) drum	2.000	90-On	1	Red Eagle®

FILTERS

ILL	ALTO No.	REF No.	Description	Spec	Year	Qty	Notes
17F	049940	E1AZ-7A098A	Filter - AOD (2wd)		80-93	1	
17F	049944	F2VY-7A098A	Filter - AODE (2wd)		92-95	1	
17F	049946	F6AZ-7A098A	Filter - AODE / 4R70W (2wd)		96-On	1	
17F	049942	E5TZ-7A098C	Filter - AOD (4wd)		84-93	1	
17F	049946	F6AZ-7A098A	Filter - AODE / 4R70W (4wd)		94-On	1	

METAL CLAD SEALS

ILL	ALTO No.	REF No.	Description	Spec	Year	Qty	Notes
18A	024400	C2AZ-7A248A	Front pump without flange	Silicone	80-91	1	
18A	026400	C2AZ-7A248A	Front pump with rib		92-On	1	
18A	026400A	F2VY-7A248A	Front pump with flange	Viton®	92-On	1	
19E	032402	D5AZ-7052A	Extension Housing without boot	2.381	80-91	1	
19E	023405	E2DZ-7052A	Extension Housing with long boot	2.381	80-91	1	
19E	023404	D5AZ-7052B	Extension Housing with short boot	2.381	80-91	1	
19E	049407	D9BZ-7052A	Extension Housing AODE / 4R70W	2.381	92-94	1	with short boot
19E	049405	F7AZ-7052A	Extension Housing AODE / 4R70W	2.485	95-On	1	with short boot
19E	049406	F6UZ-7052A	Extension Housing 4R70W - Trucks	2.485	96-On	1	with long boot
N I	049402	E0AZ-7F337A	Throttle Shaft seal		80-On	1	
N I	023406	D5AZ-7B498A	Manual Lever seal		80-On	1	

SEALING RINGS

ILL	ALTO No.	REF No.	Description	Spec	Year	Qty	Notes
KT	049600	B230	Sealing Ring Kit, AOD - 8M/5T		80-93	1	
KT	049600A	B233	Sealing Ring Kit, AOD - 8M/5T		80-93	1	with plated gov. rings
KT	049600T	B235C	Sealing Ring Kit, AOD - 13T		80-93	1	
KT	049601	B263	Sealing Ring Kit, AODE / 4R70W - 7M/4T		92-On	1	
KT	049601A	B264	Sealing Ring Kit, AODE / 4R70W - 7M/4T		92-On	1	with plated gov. rings

FORD

AOD 1980-93, AODE 1992-95
4R70E/W 1993-On, 4R75E/W 2004-On

SEALING RINGS

ILL	ALTO No.	REF No.	Description	Spec	Year	Qty	Notes
20A	049100	E0AZ-7D020A	Reverse Clutch drum		80-On	2	
21A	049101	E0AZ-7D019A	Forward Clutch drum - Cast Iron drum		80-92	2	
21A	049101A	F3LY-7D019A	Forward Clutch drum - Grob (stamped drum)		92-On	2	seal plated rings
22D	049102	E0AZ-7F273A	Governor		80-On	3-4	
22D	049102A	E6AZ-7F273A	Governor		80-On	3-4	seal plated rings
23D	049103	E3AZ-7F274A	Direct Drum		80-On	2	
24F	049104	E0AZ-7F248A	3-4 Accumulator - upper	Teflon	80-93	1	
25F	049105	E0AZ-7F249A	2-3 Accumulator - lower	Teflon	80-93	1	
26F	049106	E0AZ-7F250A	2-3 Accumulator - upper	Teflon	80-93	1	
27B	049107	F2VY-7B497A	Input shaft, AODE / 4R70W - scarf cut	Teflon	92-On	2	
27B	049107A	NA	Input shaft, AODE / 4R70W - solid	Teflon	92-On	2	

SNAP RINGS

ILL	ALTO No.	REF No.	Description	Spec	Year	Qty	Notes
KT	049681HP	NA	Kit, Intermediate sprag retainer & snap ring		80-On	1	
28B	049250-062	C8AZ-7D483C	Forward - cast iron drum	.062	80-90	AR	
28B	049250-090	C8AZ-7D483B	Forward - cast iron drum	.090	80-90	AR	
28B	049250-104	C8AZ-7D483A	Forward - cast iron drum	.104	80-90	AR	
30B	049250-062	C8AZ-7D483C	Reverse Drum	.062	80-On	AR	
30B	049250-090	C8AZ-7D483B	Reverse Drum	.090	80-On	AR	
30B	049250-104	C8AZ-7D483A	Reverse Drum	.104	80-On	AR	
32C	049251-052	E0AZ-7D483A	Direct Drum	.052	80-On	AR	
32C	049251-080	E0AZ-7D483C	Direct Drum	.080	80-On	AR	
34A	049253	389790-S	Intermediate (overruning clutch) retainer		80-On	1	OE style
35A	049254	NA	Intermediate (overruning clutch) retainer	Spiral	80-On	1	Aftermarket style

BUSHINGS

ILL	ALTO No.	REF No.	Description	Spec	Year	Qty	Notes
KT	049625	NA	Bushing Kit - AOD (Short)		80-93	1	
KT	049625B	NA	Bushing Kit - AODE / 4R70W		92-On	1	
37A	026202	E0AZ-7B258B	Front Pump - Bronze	.755	80-On	1	
37A	049200	E9TZ-7B258A	Front Pump - Bronze	.695	80-On	1	
44E	049207	E0AZ-7B025A	Case		80-On	1	
38A	049215	C6AZ-7B261C	Stator Support, Front-AODE		92-93	1	
38A	049214A	F2VP-7B261A	Stator Support, Front- 2 groove		94-On	1	
N I	049201	E0AZ-7D018A	Stator Support, Rear - AOD		80-93	1	
38A	049215	C6AZ-7B261C	Stator Support, Rear without notch - AODE		92-93	1	
N I	049215A	F4AP-7B261A	Stator Support, Rear with notch		92-On	1	
39B	049202	E0AZ-7F218A	Reverse Drum, Rear		80-On	1	
40B	049204	E0AZ-7F217A	Reverse Drum, Front		80-On	1	
41D	049203	NA	Direct Drum with oil hole		80-On	1	
42B	049205	E0AZ-7E214A	Turbine Shaft - AOD		80-93	1	
43C	049206	E0AZ-7A193A	Reverse Sun shell		80-On	2	
44E	049207	E0AZ-7B025A	Case		80-On	1	
44E	049212	NA	Case - special flanged case saver		80-On	1	
45C	049208	C4AZ-7A132A	Planet support		80-On	1	
46C	049209	E0AZ-7A374A	Planet carrier - Front	2.77	80-On	1	
47C	049210	E0AZ-7A375A	Planet carrier - Rear	1.38	80-On	1	
48C	049213	E0AZ-7B262A	Forward Sun gear shaft		80-On	1	
49E	023224	B3TZ-7A034A	Extension Housing - AOD / AODE		80-95	1	
49E	049214	F3LP-7A034AA	Extension Housing - Bronze	ID: 1.606"	93-On	1	

FORD

AOD 1980-93, AODE 1992-95
4R70E/W 1993-On, 4R75E/W 2004-On

BUSHINGS

WASHERS

ILL	ALTO No.	REF No.	Description	Spec	Year	Qty	Notes
KT	049635	NA	Washer Kit		80-On	1	
50A	049151	E0AZ-7D014A	Pump Support #1 - Green	.052	80-On	1	
50A	049152	E0AZ-7D014B	Pump Support #2 - Yellow	.070	80-On	1	
50A	049153	E0AZ-7D014C	Pump Support #3 - Natural	.087	80-On	1	
50A	049154	E0AZ-7D014D	Pump Support #4 - Red	.104	80-On	1	
50A	049155	E0AZ-7D014E	Pump Support #5 - Blue	.121	80-On	1	
N I	049158	E0AZ-7A166A	Forward clutch (6 tabs)		80-86	1	
N I	049196	E1TZ-7A166A	Forward clutch (bearing)		86-On	1	

ELECTRONIC CONTROL COMPONENTS

ILL	ALTO No.	REF No.	Description	Spec	Year	Qty	Notes
N I	049501	F2VY-7G136AC 50078	Solenoid PWM AODE		92-94	1	
N I	049502	F5AZ-7G136-A 50078	Solenoid PWM AODE		95-97	1	
N I	049503	F8AZ-7G136AA 50076	Solenoid PWM AODE		98-On	1	
N I	049504	5C2Z-7G383-AB 50122	Solenoid EPC 4R70W/4R75W		05-On	1	
N I	049511	9L3Z-7G484A	Solenoid 1-2 4R75W		09-On	1	

PISTONS

ILL	ALTO No.	REF No.	Description	Spec	Year	Qty	Notes
51E	049301	E0AZ-7D189A	Bonded piston - Reverse Servo piston	2.328	80-On	1	1 groove
51E	049302	E0AZ-7D189B	Bonded piston - Reverse Servo piston	3.000	80-On	1	2 grooves
51E	049303	E0AZ-7D189C	Bonded piston - Reverse Servo piston	3.031	80-On	1	3 grooves
52E	049304	E0AZ-7D036A	Bonded piston - Reverse Servo cover		80-On	1	
53E	049305	F7AZ-7H292A	Bonded piston - Direct (2-3) Accumulator		80-On	1	Does retro-fit
N I	049306	F4AZ-7F247A	Bonded piston cover - 1-2 Accumulator		80-On	1	

FORD
ATX
1981-94

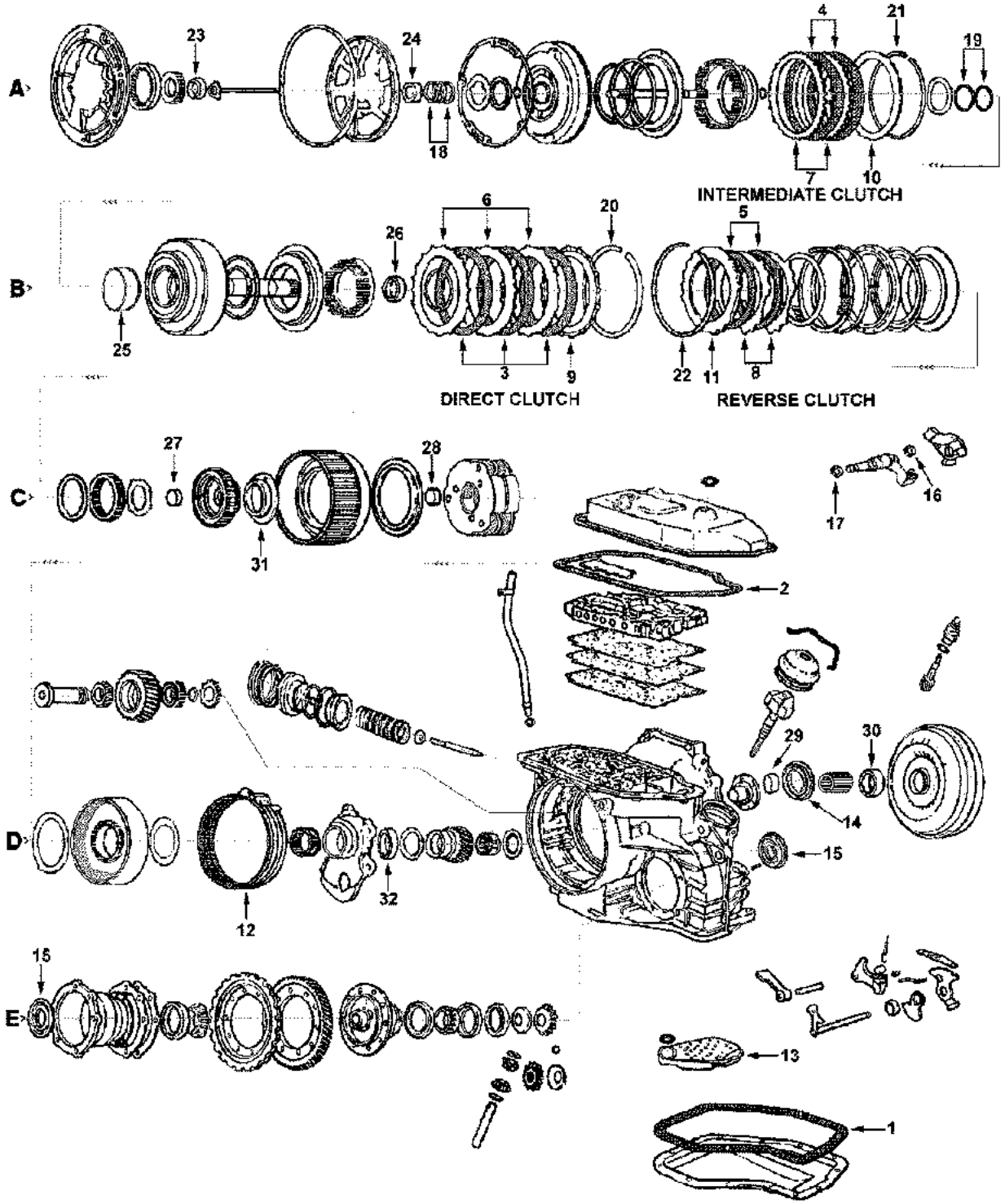

© COPYRIGHT
1999 AMERICAN DATA GRAPHICS,INC.

FORD
ATX
1981-94

KITS

*Add Suffix SK for Super Kit

ILL	Description	Years	Friction Module	Steel Module	Overhaul Kit	Banner Kit	Master Kit
KT	Rebuilding Kit with Teflon Rings	81-91	051752	051753	051800	051901LS	051901
KT	Rebuilding Kit with Teflon Rings	92-94	051752A	051753A	051800	051903LS	051903
KT	Rebuilding Kit with Metal Rings	81-94	NA	NA	051800A	NA	NA

MISCELLANEOUS GASKETS & KIT COMPONENTS

ILL	ALTO No.	REF No.	Description	Spec	Year	Qty	Notes
1E	051816	E1FZ-7A191A	Gasket, Oil pan	Cork/Rub	81-94	1	
2C	051818	E1FZ-7F396A	Gasket, VB cover	Cork/Rub	81-94	1	

FRICTION CLUTCHES

ILL	ALTO No.	REF No.	Description	Spec	Year	Qty	Notes
3B	051700	F23Z-7B164A	Direct	.076	81-94	3-4	Tan - 36T - OD: 5.053" - PL
4A	051702	E1FZ-7B164B	Intermediate	.078	81-91	2-3	Tan - 40T - OD: 7.228" - PL
4A	051702A	F23Z-7B164B	Intermediate (Larger Friction paper ID)	.078	92-94	3	Tan - 40T - OD: 7.228" - PL
5B	051702A	F23Z-7B164B	Reverse (Larger Friction paper ID)	.078	92-94	3	Tan - 40T - OD: 7.228" - PL

STEEL CLUTCHES

ILL	ALTO No.	REF No.	Description	Spec	Year	Qty	Notes
6B	051701	E1FZ-7B442A	Direct	.070	81-94	3-4	18T - ID: 3.882"
7A	051703	E2FZ-7B442B	Intermediate	.070	81-91	2-3	36T - ID: 6.383"
7A	051703A	F23Z-7B442A	Intermediate	.070	92-94	3	36T - ID: 6.080"
8B	051705	E1FZ-7B442C	Reverse	.070	81-91	2-3	11T - ID: 6.376"
8B	051705A	F23Z-7B442B	Reverse	.070	92-94	3	11T - ID: 6.146"

PRESSURE PLATES

ILL	ALTO No.	REF No.	Description	Spec	Year	Qty	Notes
9B	TBA	E1FZ-7B066A	Direct		81-94	1	
10A	TBA	E1FZ-7B066B	Intermediate		81-89	1	
10A	TBA	F23Z-7B066A	Intermediate		90-94	1	
11B	TBA	E1FZ-7B066C	Reverse		81-89	1	
11B	TBA	F23Z-7B066B	Reverse		90-94	1	

OEI® Original Equipment Improvements

ILL	ALTO No.	REF No.	Description	Spec	Year	Qty	Notes
KT	051985	SK® FX	Shift Kit® - Corrects cutloose, late shifts	Transgo®	81-94	1	

BANDS

ILL	ALTO No.	REF No.	Description	Spec	Year	Qty	Notes
12D	051951	E9FZ-7D034A	Low & Intermediate	Tan	86-94	1	use with short band strut

FILTERS

ILL	ALTO No.	REF No.	Description	Spec	Year	Qty	Notes
13E	051940	E9FZ-7A098A	Filter		81-94	1	

METAL CLAD SEALS

ILL	ALTO No.	REF No.	Description	Spec	Year	Qty	Notes
14D	051400	E6FZ-7F401A	Converter Housing		81-94	1	
15D E	051405	E1FZ-1177A	Axle (Differential)		81-94	2	
16C	049402	E0AZ-7F337A	Manual Lever	.635	81-94	1	

FORD
ATX
1981-94

METAL CLAD SEALS

17C	051406	E1FZ-7B498A	Throttle shaft	1.330	81-94	1	

SEALING RINGS

ILL	ALTO No.	REF No.	Description	Spec	Year	Qty	Notes
KT	051600	B238	Sealing Ring Kit - 5M		81-94	1	
KT	051600T	B236	Sealing Ring Kit - 5T		81-94	1	
18A	051100	NA	Stator Support (Intermediate clutch)	Teflon	81-94	3	
18A	051110	E1FZ-7D019A	Stator Support (Intermediate clutch)	Metal	81-94	3	
19A	051101	NA	Intermediate Drum (Direct clutch)	Teflon	81-94	2	
19A	051111	E1FZ-7D020A	Intermediate Drum (Direct clutch)	Metal	81-94	2	

SNAP RINGS

ILL	ALTO No.	REF No.	Description	Spec	Year	Qty	Notes
20B	051680	NA	Snap Ring Kit		81-On	AR	
20B	051252-052	E1FZ-7D483A	Direct clutch drum - selective	.052	81-94	AR	
20B	051252-064	E1FZ-7D483B	Direct clutch drum - selective	.064	81-94	AR	
22B	051250-051	E6FZ-7D483A	Reverse clutch drum - selective	.051	86-94	AR	
22B	051250-102	E6FZ-7D483D	Reverse clutch drum - selective	.102	86-94	AR	

BUSHINGS

ILL	ALTO No.	REF No.	Description	Spec	Year	Qty	Notes
KT	051625	NA	Bushing Kit		81-94	1	
23A	051200	E1EP-7B259A	Front Pump		81-94	1	
24A	051201	E1EP-7N817A	Stator Support		81-94	1	
25B	051202	E1EP-7F233A	Direct clutch drum	3/8"	81-94	1	
25B	051202A	NA	Direct clutch drum - oversize	1/5"	81-94	1	
26B	051203	E1EP-7F214A	Turbine Shaft		81-94	1	
27C	051204	E1EP-7D065A	Sun Gear		81-94	1	
28C	051204	E1EP-7D065A	Reverse Planet		81-94	1	
29D	051206	E1EP-7F437A	Converter reaction shaft support		81-94	1	Converter sun gear
30D	051207	E1EP-7N805A	Converter Hub		81-94	1	
31C	051208	E1EP-7F440A	Ring Gear (Lip type bushing)		81-94	1	
32D	051209	E1EP-7F366A	Transfer Housing		81-94	1	

WASHERS

ILL	ALTO No.	REF No.	Description	Spec	Year	Qty	Notes
KT	051635	NA	Washer Kit		81-94	1	

FORD

AXOD 1986-90, AXODE 1991-93
AX4S 1994-On

KITS

*Add Suffix SK for Super Kit

ILL	Description	Years	Friction Module	Steel Module	Overhaul Kit	Banner Kit	Master Kit
KT	Rebuilding Kit - AXOD	86-90	069752	069753	069800	069901LS	069901
KT	Rebuilding Kit - AXODE	91	069752	069753	069802	069903ELS	069903E
KT	Rebuilding Kit - AXODE / AX4S	92-98	069752A	069753A	069802	069903LS	069903
KT	Rebuilding Kit - AX4S	99-On	069752C	069753C	069802	069907LS	069907

MISCELLANEOUS GASKETS & KIT COMPONENTS

ILL	ALTO No.	REF No.	Description	Spec	Year	Qty	Notes
1E	069816	E6DZ-7A191A	Gasket, Oil pan	Cork/Rub	86-95	1	
1E	069816A	NA	Gasket, Oil pan - AX4S	Cork/Rub	96-On	1	
1E	069816B	F6DZ-7A191A	Gasket, Oil pan - AX4S	M.Rubber	96-On	1	
2E	069818	E6DZ-7F396A	Gasket, Main control (VB) cover	Cork/Rub	86-95	1	
2E	069818B	F6DZ-7F396A	Gasket, Main control (VB) cover	M.Rubber	96-On	1	
N I	010115B	N-802927-S	O Ring, Electrical connector & Speedometer		86-On	2	

FRICTION CLUTCHES

ILL	ALTO No.	REF No.	Description	Spec	Year	Qty	Notes
3B	069700	E6DZ-7B164A	Direct	.065	86-On	4	Tan - 63T - OD: 5.753" - PL
3B	069730	XF2Z-7B164CA	Direct - with hardened steel spline	.065	86-On	4	Heg - 63T - OD: 5.753" - PL
4B	069700	E6DZ-7B164A	Intermediate	.065	86-On	5	Tan - 63T - OD: 5.753" - PL
4B	069730	XF2Z-7B164CA	Intermediate - with hardened steel spline	.065	86-On	5	Heg - 63T - OD: 5.753" - PL
5A	069702	E6DZ-7B164B	Forward	.065	86-91	3-4	Tan - 52T - OD: 5.750" - SM
5A	069712	F8DZ-7B164AC	Forward	.065	92-On	3-4	Tan - 57T - OD: 5.750" - SM
6C	069704	F8DZ-7B164CA	Reverse	.069	86-On	4	Tan - 49T - OD: 5.980" - PL

STEEL CLUTCHES

ILL	ALTO No.	REF No.	Description	Spec	Year	Qty	Notes
7B	069701	E6DZ-7B442A	Direct	.069	86-95	4	34T - ID: 4.716"
7B	069701K	F7DZ-7B442AA	Direct - KOLENE®	.069	96-98	4	34T - ID: 4.716"
7B	069709K	F7DZ-7B442BA	Direct - KOLENE®	.093	99-On	4	34T - ID: 4.716"
8B	069703	E6DZ-7B442B	Intermediate	.089	86-87	4	34T - ID: 4.716"
8B	069701	E6DZ-7B442A	Intermediate	.069	88-95	4	34T - ID: 4.716"
8B	069701K	F7DZ-7B442AA	Intermediate - KOLENE®	.069	96-98	4	34T - ID: 4.716"
8B	069709A	XF2Z-7B442BA	Intermediate	.093	99-On	4	32T - ID: 4.716"
9A	069701	E6DZ-7B442A	Forward	.069	86-91	4	34T - ID: 4.716"
9A	069711	XF1Z-7B442BA	Forward	.069	92-On	4	34T - ID: 4.933"
10C	069705	XF1Z-7B442AA	Reverse	.068	86-On	4	54T - ID: 4.817"

PRESSURE PLATES

ILL	ALTO No.	REF No.	Description	Spec	Year	Qty	Notes
11B	069760B400	E6DZ-7B066A	Direct - backing	.156	86-99	1	except below
11B	TBA	F3DZ-7B066B	Direct - backing	.134	83-85	1	SHO
11B	TBA	F7DZ-7B066AA	Direct - backing		00-On	1	
12B	TBA	E8DZ-7B066A	Intermediate - backing	.125	86-On	1	
13B	069713	E8DZ-7B437A	Intermediate - spacer	.115	86-90	1	
13B	069768	E8DZ-7E085A	Intermediate - wave spring	.060	88-On	1	used in place of above
14A	069760B725	E6DZ-7B066C	Forward - backing	.285	86-91	1	
14A	069760A	F2DZ-7B066A	Forward - backing	.278	92-On	1	
14A	TBA	F3DZ-7B066A	Forward - backing	.165	93-95	1	SHO
15A	069769	E6DZ-7E085B	Forward - wave	.062	86-89	1	
15A	069768A	F0DZ-7E085A	Forward - wave	.073	90-92	1	

FORD

AXOD 1986-90, AXODE 1991-93
AX4S 1994-On

KITS

*Add Suffix SK for Super Kit

ILL	Description	Years	Friction Module	Steel Module	Overhaul Kit	Banner Kit	Master Kit
KT	Rebuilding Kit - AXOD	86-90	069752	069753	069800	069901LS	069901
KT	Rebuilding Kit - AXODE	91	069752	069753	069802	069903ELS	069903E
KT	Rebuilding Kit - AXODE / AX4S	92-98	069752A	069753A	069802	069903LS	069903
KT	Rebuilding Kit - AX4S	99-On	069752C	069753C	069802	069907LS	069907

MISCELLANEOUS GASKETS & KIT COMPONENTS

ILL	ALTO No.	REF No.	Description	Spec	Year	Qty	Notes
1E	069816	E6DZ-7A191A	Gasket, Oil pan	Cork/Rub	86-95	1	
1E	069816A	NA	Gasket, Oil pan - AX4S	Cork/Rub	96-On	1	
1E	069816B	F6DZ-7A191A	Gasket, Oil pan - AX4S	M.Rubber	96-On	1	
2E	069818	E6DZ-7F396A	Gasket, Main control (VB) cover	Cork/Rub	86-95	1	
2E	069818B	F6DZ-7F396A	Gasket, Main control (VB) cover	M.Rubber	96-On	1	
N I	010115B	N-802927-S	O Ring, Electrical connector & Speedometer		86-On	2	

FRICTION CLUTCHES

ILL	ALTO No.	REF No.	Description	Spec	Year	Qty	Notes
3B	069700	E6DZ-7B164A	Direct	.065	86-On	4	HEG - 63T - OD: 5.753" - PL
3B	069730	XF2Z-7B164CA	Direct - with hardened steel spline	.065	86-On	4	HEG - 63T - OD: 5.753" - PL
4B	069700	E6DZ-7B164A	Intermediate	.065	86-On	5	HEG - 63T - OD: 5.753" - PL
4B	069730	XF2Z-7B164CA	Intermediate - with hardened steel spline	.065	86-On	5	HEG - 63T - OD: 5.753" - PL
5A	069702	E6DZ-7B164B	Forward	.065	86-91	3-4	HEG - 52T - OD: 5.750" - SM
5A	069712	F8DZ-7B164AC	Forward	.065	92-On	3-4	HEG - 57T - OD: 5.750" - SM
6C	069704	F8DZ-7B164CA	Reverse	.069	86-On	4	HEG - 49T - OD: 5.980" - PL

STEEL CLUTCHES

ILL	ALTO No.	REF No.	Description	Spec	Year	Qty	Notes
7B	069701	E6DZ-7B442A	Direct	.069	86-95	4	34T - ID: 4.716"
7B	069701K	F7DZ-7B442AA	Direct - KOLENE®	.069	96-98	4	34T - ID: 4.716"
7B	069709K	F7DZ-7B442BA	Direct - KOLENE®	.093	99-On	4	34T - ID: 4.716"
8B	069703	E6DZ-7B442B	Intermediate	.089	86-87	4	34T - ID: 4.716"
8B	069701	E6DZ-7B442A	Intermediate	.069	88-95	4	34T - ID: 4.716"
8B	069701K	F7DZ-7B442AA	Intermediate - KOLENE®	.069	96-98	4	34T - ID: 4.716"
8B	069709A	XF2Z-7B442BA	Intermediate	.093	99-On	4	32T - ID: 4.716"
9A	069701	E6DZ-7B442A	Forward	.069	86-91	4	34T - ID: 4.716"
9A	069711	XF1Z-7B442BA	Forward	.069	92-On	4	34T - ID: 4.933"
10C	069705	XF1Z-7B442AA	Reverse	.068	86-On	4	54T - ID: 4.817"

PRESSURE PLATES

ILL	ALTO No.	REF No.	Description	Spec	Year	Qty	Notes
11B	069760B400	E6DZ-7B066A	Direct - backing	.156	86-99	1	except below
11B	TBA	F3DZ-7B066B	Direct - backing	.134	83-85	1	SHO
11B	TBA	F7DZ-7B066AA	Direct - backing		00-On	1	
12B	TBA	E8DZ-7B066A	Intermediate - backing	.125	86-On	1	
13B	069713	E8DZ-7B437A	Intermediate - spacer	.115	86-90	1	
13B	069768	E8DZ-7E085A	Intermediate - wave spring	.060	88-On	1	used in place of above
14A	069760B725	E6DZ-7B066C	Forward - backing	.285	86-91	1	
14A	069760A	F2DZ-7B066A	Forward - backing	.278	92-On	1	
14A	TBA	F3DZ-7B066A	Forward - backing	.165	93-95	1	SHO
15A	069769	E6DZ-7E085B	Forward - wave	.062	86-89	1	

FORD

AXOD 1986-90, AXODE 1991-93
AX4S 1994-On

PRESSURE PLATES

ILL	ALTO No.	REF No.	Description	Spec	Year	Qty	Notes
15A	069768A	F0DZ-7E085A	Forward - wave	.073	90-92	1	
15A	069768B	F2DZ-7E085A	Forward - wave	.083	93-On	1	
16C	069763A500	E6DZ-7B066D	Reverse - backing	.203	86-On	1	
17C	TBA	E6DZ-7B085A	Reverse - wave		86-On	1	

OEI® Original Equipment Improvements

ILL	ALTO No.	REF No.	Description	Spec	Year	Qty	Notes
KT	069985	SK® AXOD	Shift Kit® - AXOD	Transgo®	86-92	1	
KT	069986	SK® AXODE	Shift Kit® - AXODE / AX4S	Transgo®	91-On	1	

BANDS

ILL	ALTO No.	REF No.	Description	Spec	Year	Qty	Notes
18C	069950	F8DZ-7D034A	Low / Intermediate	Tan	86-On	1	
19A	069955	F8DZ-7F196AB	Overdrive	Tan	86-On	1	

FILTERS

ILL	ALTO No.	REF No.	Description	Spec	Year	Qty	Notes
20E	069940A	F5TZ-7A098BA	Filter - AXOD, AXODE, AX4S (short orange)		86-95	1	retros back
20E	069942	F5DZ-7A098AA	Filter - AX4S (tall orange seal)		96-On	1	
20E	069944	F6DZ-7A098AA	Filter - AX4S SHO only (green seal)		93-95	1	

METAL CLAD SEALS

ILL	ALTO No.	REF No.	Description	Spec	Year	Qty	Notes
21E	069400	F2DZ-7F401A	Converter Hub		86-On	1	
22E	069425	E6DZ-1177A	Axle		86-On	2	
N I	069410	E6DZ-7F337A	Manual Lever		86-On	1	
N I	069411	F1DZ-7N089A	Pump shaft seal		86-On	1	

SEALING RINGS

ILL	ALTO No.	REF No.	Description	Spec	Year	Qty	Notes
KT	069601	B240E	Sealing Ring Kit - 2M / 11T		86-On	1	
23E	069100	E6DZ-7G091A	Turbine Shaft - Front		86-On	1	
24E	069101	F2DZ-7G090A	Turbine Shaft - Rear		86-On	1	
25E	069102	E6DZ-7G092A	Pump Shaft - Front (scarf cut)		86-On	2	
26E	069103	E6DZ-7G093A	Pump Shaft - Rear (solid)		86-On	2	
27A	069104	E8DZ-7G019A	Driven Sprocket Support		86-On	5	
N I	069105	E6DZ-7G281A	Pump Slide		86-On	1	
N I	069106	NA	Governor - AXOD		86-90	1	

SNAP RINGS

ILL	ALTO No.	REF No.	Description	Spec	Year	Qty	Notes
28B	TBA	E6DZ-7D483D	Direct - Selective	.117	86-On	AR	
29B	069250-049	E8DZ-7D483A	Intermediate - Selective	.049	86-On	AR	
29B	069250-068	E8DZ-7D483B	Intermediate - Selective	.068	86-On	AR	
29B	069250-086	E8DZ-7D483C	Intermediate - Selective	.086	86-On	AR	
29B	069250-106	E8DZ-7D483D	Intermediate - Selective	.106	86-On	AR	
29B	069250-122	E8DZ-7D483E	Intermediate - Selective	.122	86-On	AR	
31C	069251-062	E6DZ-7D483R	Reverse - Selective	.062	86-On	AR	
31C	069251-117	E6DZ-7D483U	Reverse - Selective	.117	86-On	AR	

FORD

AXOD 1986-90, AXODE 1991-93
AX4S 1994-On

BUSHINGS

ILL	ALTO No.	REF No.	Description	Spec	Year	Qty	Notes
KT	069625	NA	Bushing Kit		86-On	1	
N I	069200	E6SP-7N805AA	Converter Hub		86-On	1	
32C	069201	E6SP-7G344AA	Final Drive Sun Gear		86-On	1	
33C	069202	E6SP-7G220AA	Front Planet Carrier		86-91	1	
34B	069203	E6SP-7G123AA	Direct / Intermediate Drum		86-On	1	
35B	069204	E6SP-7F209AA	Front Sun Gear Shell - small O.D.	1.590	86-92	2	
35B	069204A	F3DP-7F209AA	Front Sun Gear Shell - large O.D.	1.620	93-On	1	
36A	069205	E6SP-7G138AC	Direct Overrun clutch - narrow	.560	86-On	1	
36A	069205A	F3DP-7G138BB	Direct Overrun clutch - wide (SHO)	.660	93-95	1	
37A	069206	E6SP-7G170AA	Driven Sprocket Support		86-On	1	
38E	069207	E6SP-7E110AA	Case - Rear		86-On	1	
39A	069208	E8DP-7G210AA	Overdrive Drum		86-On	1	
40E	048206	E6SP-7G096AA	Stator Support		86-On	1	
41C	069210	E6SP-7A132AA	Rear Planet Support - narrow		86-87	2	
41C	069210A	E8SP-7A132AA	Rear Planet Support - long		88-On	1	replaces 2
42C	069211	E6SP-7B375AA	Rear Planet		86-On	1	
43C	069212	E6SP-7G065A	Sun Gear Drum - small O.D.	1.980	86-92	1	
43C	069212A	E3DP-7G065BA	Sun Gear Drum - large O.D.	2.000	93-On	1	

WASHERS

ILL	ALTO No.	REF No.	Description	Spec	Year	Qty	Notes
KT	069635	NA	Washer Kit		86-On	1	

ELECTRONIC CONTROL COMPONENTS

ILL	ALTO No.	REF No.	Description	Spec	Year	Qty	Notes
N I	069505	F8DZ-7G383BB	Solenoid EPS AXOD-E, AX4S		91-On	1	

MOLDED PISTONS

ILL	ALTO No.	REF No.	Description	Spec	Year	Qty	Notes
45A	069330	F8DZ-7A262AB	Bonded piston - Forward		96-97	1	Windstar 3.8L eng.
45A	069330A	F88Z-7A262AB	Bonded piston - Forward		98-On	1	Windstar 3.8L eng.
46B	069331	F4DZ-7A262BA	Bonded piston - Direct		96-On	1	Windstar 3.8L eng.
47B	069332	F88Z-7E005AA	Bonded piston - Intermediate		96-On	1	Windstar 3.8L eng.
48B	069333	F3DZ-7H185A	Bonded piston - Intermediate balance		96-On	1	Windstar 3.8L eng.
49E	069334	E6DZ-7F200A	Bonded piston - Overdrive Servo		86-97	1	
50E	069334A	F88Z-7F200A	Bonded piston - Overdrive Servo		98-On	1	

FORD
AX4N / 4F50N
1995-On

KITS

*Add Suffix SK for Super Kit

ILL	Description	Years	Friction Module	Steel Module	Overhaul Kit	Banner Kit	Master Kit
KT	Rebuilding Kit - all except below (without Molded Pistons)	95-99	069752B	069753B	069804	069905LS	069905
KT	Rebuilding Kit - all except below (with Molded Pistons)	95-99	069752B	069753B	069804X	TBA	TBA
KT	Rebuilding Kit - Taurus SHO (without Molded Pistons)	96-98	069752B	069753D	069804	069905LS	069905A
KT	Rebuilding Kit - Taurus SHO (with Molded Pistons)	96-98	069752B	069753D	069804X	TBA	TBA
KT	Rebuilding Kit - Lincoln 98+ / SHO 99+ (without Molded Pistons)	98-00	069752B	069753E	069804	069905LS	069905B
KT	Rebuilding Kit - Lincoln 98+ / SHO 99+ (with Molded Pistons)	98-00	069752B	069753E	069804X	TBA	TBA
KT	Rebuilding Kit - (without Molded Pistons)	00-03	069752B	069753E	069804A	069905CLS	069905C
KT	Rebuilding Kit - (with Molded Pistons)	00-03	069752B	069753E	069804AX	TBA	TBA
KT	Rebuilding Kit - (with Molded Gasket, without Pistons)	04-On	069752B	069753E	069804B	069905DLS	069905D
KT	Rebuilding Kit - (with Molded Gasket & Pistons)	04-On	069752B	069753E	069804BX	TBA	TBA

MISCELLANEOUS GASKETS & KIT COMPONENTS

ILL	ALTO No.	REF No.	Description	Spec	Year	Qty	Notes
1A	069816C	F5DZ-7A191A	Gasket, Oil pan	Cork/Rub	95	1	
1A	069816A	NA	Gasket, Oil pan	Cork/Rub	96-On	1	
1A	069816D	F6DZ-7A191B	Gasket, Oil pan -	M. Rubber	96-On	1	
2A	069818A	F5DZ-7A396A	Gasket, Side Cover	Cork/Rub	95	1	
2A	069818B	F6DZ-7A396B	Gasket, Side Cover - molded rubber		96-On	1	
N I	010118B	NA	O Ring, Electrical connector		95-On	1	

FRICTION CLUTCHES

ILL	ALTO No.	REF No.	Description	Spec	Year	Qty	Notes
3C	069730	XF2Z-7B164CA	Direct - with hardened steel spline	.065	95-On	4	HEG - 63T - OD: 5.753" - PL
4C	069730	XF2Z-7B164CA	Intermediate - with hardened steel spline	.065	95-On	5	HEG - 63T - OD: 5.753" - PL
5B	069712	F8DZ-7B164AC	Forward	.065	95-On	3-4	Tan - 57T - OD: 5.750" - SM
6D	069704	F8DZ-7B164CA	Reverse	.069	95-On	4	Tan - 49T - OD: 5.980" - PL
7E	069706	F8DZ-7B164DB	Low / Intermediate	.063	95-On*	5	Tan - 59T - OD: 5.954" - SM

STEEL CLUTCHES

ILL	ALTO No.	REF No.	Description	Spec	Year	Qty	Notes
8C	069701	E6DZ-7B442A	Direct	.069	95	4	34T - ID: 4.716"
8C	069701K	F7DZ-7B442AA	Direct - KOLENE®	.069	96-On	4	34T - ID: 4.716"
9C	069701	E6DZ-7B442A	Intermediate	.069	95	4	34T - ID: 4.716"
9C	069701K	F7DZ-7B442AA	Intermediate - KOLENE®	.069	96-On	4	34T - ID: 4.716"
9C	069709K	F7DZ-7B442BA	Intermediate - KOLENE® (3.4L & SHO only)	.093	97-On	4	34T - ID: 4.716"
10B	069711	XF1Z-7B442BA	Forward	.069	95-On	4	34T - ID: 4.933"
11D	069705	XF1Z-7B442AA	Reverse - except below	.068	95-On	4	54T - ID: 4.817"
11D	069715	F8OZ-7B442BA	Reverse - 3.4L & 4.6L engine	.059	95-On	AR	52T - ID: 4.817"
12E	069707	XF1Z-7B442EA	Low / Intermediate	.069	95-On*	5	32T - ID: 4.875"
			* For 1995 - On Applications, 069706 & 069707 must be used as a matched set.				

PRESSURE PLATES

ILL	ALTO No.	REF No.	Description	Spec	Year	Qty	Notes
13C	TBA	F3DZ-7B066B	Direct - backing	.134	95	1	Lincoln
13C	069762B	F5DZ-7B066A	Direct - backing		96-On	1	
13C	069762C	NA	Direct - backing		95-On	1	
13C	TBA	XF1Z-7B066BA	Direct - backing		00-On	1	

FORD
AX4N / 4F50N
1995-On

PRESSURE PLATES

ILL	ALTO No.	REF No.	Description	Spec	Year	Qty	Notes
14C	TBA	E8DZ-7B066A	Intermediate - backing	.125	95-On	1	
14C	TBA	F5DZ-7B066C	Intermediate - backing		95-On	1	3.0L vulcan engine
14C	069768	NA	Intermediate - Cushion Spring -wave	.062	95	1	
15B	TBA	F3DZ-7B066A	Forward - backing	.165	95-On	1	
15B	069760A	F2DZ-7B066A	Forward - backing	.278	95-99	1	3.0L vulcan engine
16B	069768B	F2DZ-7E085A	Forward - wave	.083	95-On	1	
N I	069768C	F5OP-7G159AA	Forward - Cushion Spring -wave	.071	95-On	1	
17D	TBA	E6DZ-7B066D	Reverse - backing	.203	95-97	1	
17D	TBA	F8DZ-7B066AA	Reverse - backing		98-99	1	3.0L vulcan engine
17D	TBA	F8OZ-7B066AA	Reverse - backing		98-On	1	
18E	TBA	F5DZ-7B066B	Low / Intermediate - backing		95	1	
18E	TBA	F6DZ-7B066A	Low / Intermediate - backing		96-97	1	
18E	069761	XF1Z-7B066EA	Low / Intermediate - backing		98-On	1	28T

OEI® Original Equipment Improvements

ILL	ALTO No.	REF No.	Description	Spec	Year	Qty	Notes
KT	069986A	SK® AX4N	Shift Kit®		95-On	1	

BANDS

ILL	ALTO No.	REF No.	Description	Spec	Year	Qty	Notes
19E	069951	F8DZ-7F162BA	Coast	Tan	95-On	1	
20B	069955	F8DZ-7F196AB	Overdrive	Tan	95-On	1	

FILTERS

ILL	ALTO No.	REF No.	Description	Spec	Year	Qty	Notes
21A	069944	F6DZ-7A098AA	Filter (green seal)		95-On	1	

METAL CLAD SEALS

ILL	ALTO No.	REF No.	Description	Spec	Year	Qty	Notes
22A	069400	F2DZ-7F401A	Converter Hub		95-On	1	
N I	069425	E6DZ-1177A	Axle		95-On	2	
N I	069410	E6DZ-7F337A	Manual Lever		95-On	1	
N I	069411	F1DZ-7N089A	Pump shaft seal		95-On	1	

SEALING RINGS

ILL	ALTO No.	REF No.	Description	Spec	Year	Qty	Notes
KT	069601	B240E	Sealing Ring Kit - 2M / 11T		95-On	1	
23A	069100	E6DZ-7G091A	Turbine Shaft - Front		95-On	1	
24A	069101	F2DZ-7G090A	Turbine Shaft - Rear		95-On	1	
25A	069102	E6DZ-7G092A	Pump Shaft - Front (scarf cut)		95-On	2	
26A	069103	E6DZ-7G093A	Pump Shaft - Rear (solid)		95-On	2	
27A	069104	E8DZ-7G019A	Driven Sprocket Support		95-On	5	
28A	069105	E6DZ-7G281A	Pump Slide		95-On	1	

SNAP RINGS

ILL	ALTO No.	REF No.	Description	Spec	Year	Qty	Notes
33D	069251-117	E6DZ-7D483U	Reverse - Selective	.117	95-On	AR	

BUSHINGS

ILL	ALTO No.	REF No.	Description	Spec	Year	Qty	Notes
KT	069625	NA	Bushing Kit		95-On	1	

FORD
AX4N / 4F50N
1995-On

BUSHINGS

ILL	ALTO No.	REF No.	Description	Spec	Year	Qty	Notes
35A	069200	E6SP-7N805AA	Converter Hub		95-On	1	
36E	069201	E6SP-7G344AA	Final Drive Sun Gear		95-On	1	
37C	069203	E6SP-7G123AA	Direct / Intermediate Drum		95-On	1	
38D	069204A	F3DP-7F209AA	Front Sun Gear Shell - large O.D.	1.620	95-On	1	
39B	069205	E6SP-7G138AC	Direct Overrun clutch - narrow	.560	95-On	1	
39B	069205A	F3DP-7G138BB	Direct Overrun clutch - wide (SHO)	.660	95-On	1	
40A	069206	E6SP-7G170AA	Driven Sprocket Support		95-On	1	
N I	069207	E6SP-7E110AA	Case - Rear		95-On	1	
41B	069208	E8DP-7G210AA	Overdrive Drum		95-On	1	
42A	048206	E6SP-7G096AA	Stator Support		95-On	1	
43E	069210A	E8SP-7A132AA	Rear Planet Support - long		95-On	1	
44D	069211	E6SP-7B375AA	Rear Planet		95-On	1	
45E	069212A	E3DP-7G065BA	Sun Gear Drum - large O.D.	2.000	95-On	1	

WASHERS

ILL	ALTO No.	REF No.	Description	Spec	Year	Qty	Notes
KT	069635	NA	Washer Kit		95-On	1	

MOLDED PISTONS

ILL	ALTO No.	REF No.	Description	Spec	Year	Qty	Notes
KT	069670	NA	Piston Kit		94-98	1	5 Pistons
KT	069671	NA	Piston Kit		99-03	1	5 Pistons
KT	069672	NA	Piston Kit		04-07	1	6 Pistons
47B	069330	F8DZ-7A262AB	Bonded piston - Forward		95-97	1	
47B	069330A	F88Z-7A262AB	Bonded piston - Forward		98-On	1	
48C	069331	F4DZ-7A262BA	Bonded piston - Direct		95-On	1	
49C	069332	F88Z-7E005AA	Bonded piston - Intermediate		95-On	1	
50C	069333	F3DZ-7H185A	Bonded piston - Intermediate balance		95-On	1	
51E	069335	F5DZ-7H290A	Bonded piston - Low / Intermediate		95-On	1	
N I	069334	E6DZ-7F200A	Bonded piston - Overdrive Servo		95-97	1	
N I	069334A	F88Z-7F200A	Bonded piston - Overdrive Servo		98-On	1	

FORD
C3
1974-87

KITS

*Add Suffix SK for Super Kit

ILL	Description	Years	Friction Module	Steel Module	Overhaul Kit	Banner Kit	Master Kit
KT	Rebuilding Kit	74-77	041752	041753	041800	041901LS	041901
KT	Rebuilding Kit	78-87	041752	041753B	041800	041901LS	041901A

MISCELLANEOUS GASKETS & KIT COMPONENTS

ILL	ALTO No.	REF No.	Description	Spec	Year	Qty	Notes
1D	041816	D5ZZ-7A191B	Gasket, Oil pan	Cork/Rub	74-87	1	
2D	010113B	87034-S94	O Ring, Modulator		74-87	1	
N I	010115B	87036-S94	O Ring, Speedometer		74-87	1	

FRICTION CLUTCHES

ILL	ALTO No.	REF No.	Description	Spec	Year	Qty	Notes
3B	041700	E3ZZ-7B164A	Forward	.075/1.9	74-87	4-5	Tan - 72T - OD: 4.650" - WF
4B	041702	E3ZZ-7B164B	High & Reverse	.075/1.9	74-87	4-5	Tan - 48T - OD: 4.893" - WF
4B	041722-190	NA	High & Reverse	.075/1.9	74-87	4-5	HEG - 48T - OD: 4.893" - WF

STEEL CLUTCHES

ILL	ALTO No.	REF No.	Description	Spec	Year	Qty	Notes
5B	041701	D4ZZ-7B442A	Forward	.078/1.98	74-77	3-5	19T - ID: 3.800"
5B	041705	D8ZZ-7B442A	Forward	.068/1.73	78-87	4-5	19T - ID: 3.800"
5B	041701-250	NA	Forward - selective	.100/2.54	74-87	AR	19T - ID: 3.800"
6B	041703	D4ZZ-7B442B	High & Reverse	.078/1.98	74-77	4-5	20T - ID: 3.970"
6B	041707	D8ZZ-7B442B	High & Reverse	.068/1.73	78-87	4-5	20T - ID: 3.970"
6B	041703-250	NA	High & Reverse - Selective	.100/2.54	74-87	AR	20T - ID: 3.970"

PRESSURE PLATES

ILL	ALTO No.	REF No.	Description	Spec	Year	Qty	Notes
7B	041760	D4ZZ-7B066A	Forward - backing	.215	74-87	1	
8B	TBA	D4ZZ-7B066B	High & Reverse - backing	.220	74-87	1	

OEI® Original Equipment Improvements

ILL	ALTO No.	REF No.	Description	Spec	Year	Qty	Notes
KT	041985	SK® C3	Shift Kit®	Transgo®	74-87	1	

BANDS

ILL	ALTO No.	REF No.	Description	Spec	Year	Qty	Notes
9A	041950	E6TZ-7D034A	Intermediate (Flex)	Tan	74-87	1	
10D	041955	E3ZZ-7D095A	Reverse (Rigid)	Tan	74-87	1	

METAL CLAD SEALS

ILL	ALTO No.	REF No.	Description	Spec	Year	Qty	Notes
12A	041400	D4ZZ-7A248A	Front Pump		74-87	1	
13E	TBA	D5ZZ-7052A	Extension Housing without Boot		74-87	1	
13E	041405A	E2ZZ-7052A	Extension Housing with Boot		74-87	1	
N I	023406	D5AZ-7B498A	Manual Lever		74-87	1	

FORD
C3
1974-87

SEALING RINGS

ILL	ALTO No.	REF No.	Description	Spec	Year	Qty	Notes
KT	041600	B225	Sealing Ring Kit - 7M		74-87	1	
14A	041100	D4ZZ-7D025A	Front Pump support to Overdrive drum	Metal	74-87	2	
15B	041101	D4ZZ-7D019A	Forward clutch drum	Metal	74-87	2	
16E	041102	D4ZZ-7D011B	Governor	Metal	74-87	3	
16E	041102A	F0TZ-7D011A	Governor - seal plated	Metal	74-87	3	
16E	041102B	E7TZ-7D011A	Governor - viton	Rubber	74-87	3	

SNAP RINGS

ILL	ALTO No.	REF No.	Description	Spec	Year	Qty	Notes
KT	041680	NA	Kit		74-87	1	
17B	041251-054	E860115-S	Forward Drum	.054/1.37	74-87	AR	
17B	041251-066	E860116-S	Forward Drum	.066/1.73	74-87	AR	
17B	041251-082	E860117-S	Forward Drum	.082/2.08	74-87	AR	
17B	041251-096	E860118-S	Forward Drum	.096/2.44	74-87	AR	

BUSHINGS

ILL	ALTO No.	REF No.	Description	Spec	Year	Qty	Notes
KT	041625	NA	Bushing Kit		74-87	1	
19A	041200A	NA	Converter Housing	Bronze	74-87	1	
19A	041200X	NA	Converter Housing	Babbit	74-87	1	
20A	041201	NA	Front Pump stator support - Front	Steel	74-87	1	
21A	041200	NA	Front Pump stator support - Rear		74-87	1	
22A	041203	NA	High Drum - Steel Drum	2.368	74-87	1	
23D	041204	NA	Reverse Brake drum		74-87	1	
24C	041205	NA	Sun Gear		74-87	2	
25D	041206	NA	Case		74-87	1	
26E	041207	D7FZ-7A034A	Extension Housing		74-87	1	

WASHERS

ILL	ALTO No.	REF No.	Description	Spec	Year	Qty	Notes
KT	041635	NA	Washer Kit		74-87	1	

MODULATORS

ILL	ALTO No.	REF No.	Description	Spec	Year	Qty	Notes
27D	041500	E3ZZ-7A377A	Blue Stripe		74-87	1	

FORD

C4 1964-81
C5 1982-86

KITS

*Add Suffix SK for Super Kit

ILL	Description	Years	Friction Module	Steel Module	Overhaul Kit	Banner Kit	Master Kit
KT	Rebuilding Kit	64	025752E	025753	NA	NA	NA
KT	Rebuilding Kit	65-69	025752	025753	025802X	025901LS	025901
KT	Rebuilding Kit - with Farpak/Teflon Overhaul Kit	70-81	025752	025753	025804HP	025903LS	025903
KT	Rebuilding Kit - C5	82-86	025752	025753A	025806X	025905LS	025905

KITS - HI-PERFORMANCE Red Eagle®

ILL	Description	Years	Friction Module	Steel Module	Overhaul Kit	Banner Kit	Master Kit
KT	Rebuilding Kit - with Farpak/Teflon Overhaul Kit	70-81	025752HP	025753HP	025804HP	025903HPLS	025903HP

KITS - HI-PERFORMANCE Red Eagle® with PowerPack®

ILL	Description	Years	Friction and Steel Module	Overhaul Kit	Banner Kit	Master Kit
KT	Rebuilding Kit - with Reverse PowerPack® &	70-81	025750HPPWR	025804HP	NA	025903HPPWR

MISCELLANEOUS GASKETS & KIT COMPONENTS

ILL	ALTO No.	REF No.	Description	Spec	Year	Qty	Notes
1E	025823	D6OZ-7A191A	Gasket, Oil pan	Cork/Rub	64-86	1	
N I	025001A	NA	Gasket, Front Pump to Case	.030	64-86	1	Thick
N I	025004A	NA	Gasket, Servo Cover	.030	64-86	1	Thick
N I	010115B	87036-S94	O Ring, Speedometer		64-86	1	
N I	025507	380850-S	Nut, Band Adjusting		64-82	1-2	
N I	025544	389049-S102	Nut, Band Adjusting		82-86	1	

FRICTION CLUTCHES

ILL	ALTO No.	REF No.	Description	Spec	Year	Qty	Notes
2B	025706	C8AZ-7B164D	Forward (rear)	.061	64-86	4-5	Tan - 42T - OD: 4.556" - SM
3B	025702	C4AZ-7B164D	Reverse (front)	.090	64	3-4	Tan - 42T - OD: 4.556" - WF
3B	025720	E2SZ-7B164A	Reverse (front)	.078	65-86	3-4	Tan - 42T - OD: 4.556" - PL

FRICTION CLUTCHES - HI-PERFORMANCE - Red Eagle®

ILL	ALTO No.	REF No.	Description	Spec	Year	Qty	Notes
2B	025740	NA	Forward (rear)	.061	64-86	4-5	Red - 42T - OD: 4.552" - SM
3B	025742	NA	Reverse (front)	.078	65-86	3-4	Red - 42T - OD: 4.552" - SM
3B	025744-150	NA	Reverse (front) PowerPack® Comp.	.059	65-86	AR	Red - 42T - OD: 4.654" - PL

FRICTION CLUTCHES - HI-PERFORMANCE - UNIT PACKS (ONE Rebuild)

ILL	ALTO No.	REF No.	Description	Spec	Year	Qty	Notes
KT	025740UP5	NA	UNIT PACK - Forward (rear)	.061	64-86	1	5 Red Eagle® Frictions
KT	025742UP4	NA	UNIT PACK - Reverse (front)	.078	65-86	1	4 Red Eagle® Frictions

STEEL CLUTCHES

ILL	ALTO No.	REF No.	Description	Spec	Year	Qty	Notes
4B	025703	C4AZ-7B442C	Forward (rear) - rough finish	.078	64-86	3-4	26T - ID: 3.596"
5B	025701	C4AZ-7B442B	Reverse (front) - smooth finish	.078	64-86	3-4	26T - ID: 3.596"
5B	025701-150	NA	Reverse - thin	.060	64-86	3-4	26T - ID: 3.596"
4/5B	025721	NA	Forward / Reverse - selective	.095	64-86	AR	26T - ID: 3.596"
4/5B	025723	NA	Forward / Reverse - selective	.090	64-86	AR	26T - ID: 3.596"

FORD

C4 1964-81
C5 1982-86

STEEL CLUTCHES - HI-PERFORMANCE - Kolene®

ILL	ALTO No.	REF No.	Description	Spec	Year	Qty	Notes
4/5B	025701K	NA	Forward / Reverse - smooth finish	.078	64-86	3-4	Kol - 26T - ID: 3.598"
5B	025701K150	NA	Reverse - thin	.060	64-86	3-4	Kol - 26T - ID: 3.598"
5B	025701HK150	NA	Reverse - thin with Turbulator Holes	.060	64-86	3-4	Kol - 26T - ID: 3.598"

STEEL CLUTCHES - HI-PERFORMANCE - UNIT PACKS (ONE Rebuild)

ILL	ALTO No.	REF No.	Description	Spec	Year	Qty	Notes
KT	025701KUP4	NA	UNIT PACK - Forward / Reverse	.078	64-86	1	4 Kolene® Steels

PRESSURE PLATES

ILL	ALTO No.	REF No.	Description	Spec	Year	Qty	Notes
6B	TBA	C8AZ-7B066C	Forward - backing	.281	64-81	1	
6B	TBA	E1AZ-7B066A	Forward - backing	.313	82-86	1	
7B	TBA	C4AZ-7B066A	Forward - apply	.219	64-81	1	
7B	TBA	E1AZ-7B066B	Forward - apply	.141	82-86	1	
8B	025701-330	NA	Reverse - C4 backing PowerPack® Comp.	.130	64-86	1	26T - ID: 3.596"
8B	025701-444	NA	Reverse - C5 backing PowerPack® Comp.	.174	82-86	1	14T - ID: 3.596"
8B	TBA	C4AZ-7B066A	Reverse - backing	.220	64-82	1	use with 6 plate pack
8B	TBA	E2SZ-7B066B	Reverse - backing	.297	82-86	1	use with 6 plate pack
8B	TBA	E1AZ-7B066B	Reverse - backing	.141	82	1	use with 8 plate pack

OEI® Original Equipment Improvements

ILL	ALTO No.	REF No.	Description	Spec	Year	Qty	Notes
KT	025755A	NA	PowerPack® - C4 Reverse		64-86	1	Red Eagle® & Kolene®
KT	025755	NA	PowerPack® - C5 Reverse		82-86	1	Red Eagle® & Kolene®
KT	025958	SK® 4L	Shift Kit® - except 1965 Mustang	Transgo®	65-66	1	
KT	025958A	SK® 4	Shift Kit® - Mustang only	Transgo®	64-65	1	
KT	025958B	SK® 4SL	Shift Kit®	Transgo®	67-70	1	
KT	025959	SK® 4S	Shift Kit® - 6 cylinder	Transgo®	67-70	1	
KT	025986	SK® 4-71	Shift Kit®	Transgo®	71-72	1	
KT	025985A	SK® C5	Shift Kit® - C4 & C5	Transgo®	73-86	1	corrects no reverse hot
KT	025992	45-01	Reprogramming Kit™	Transgo®	65-66	1	
KT	025993	47-1	Reprogramming Kit™	Transgo®	65-66	1	Full Manual
KT	025993A	47-2	Reprogramming Kit™	Transgo®	67-69	1	
KT	025993B	47-3	Reprogramming Kit™	Transgo®	67-69	1	Full Manual
KT	025991	40-2	Reprogramming Kit™	Transgo®	70-On	1	
KT	025991A	40-3	Reprogramming Kit™	Transgo®	70-On	1	Full Manual

BANDS

ILL	ALTO No.	REF No.	Description	Spec	Year	Qty	Notes
9A	TBA	NA	Intermediate (front) - without arrow	1.250	64-65	1	
9A	025957	D9AZ-7D034C	Intermediate (front) - flex	2.125	67-86	1	
10C	025953	D0AZ-7D095A	Reverse (rear)		64-86	1	

BANDS - HI-PERFORMANCE - Red Eagle® or Carbonite®

ILL	ALTO No.	REF No.	Description	Spec	Year	Qty	Notes
9A	025957HP	NA	Intermediate (front) - flex	2.125	67-86	1	Red Eagle®
9A	025960	NA	Intermediate (front) - rigid	2.125	67-86	1	Red Eagle®

FORD

C4 1964-81

C5 1982-86

FILTERS

ILL	ALTO No.	REF No.	Description	Spec	Year	Qty	Notes
11E	025942	C5AZ-7A098C	Filter		65-70	1	
11E	025944	D0DZ-7A098B	Filter - 6 & 8 cylinder (shallow pan)		70-81	1	
11E	025946	D4FZ-7A098B	Filter - 4 cylinder (deep pan)		74-81	1	
11E	025948	D3BZ-7A098A	Filter - Bronco		73-77	1	
11E	025934	E3TZ-7A098A	Filter - C5 4wd (deep) with neck		82-86	1	
11E	025936	E2DZ-7A098A	Filter - C5		82-86	1	

METAL CLAD SEALS

ILL	ALTO No.	REF No.	Description	Spec	Year	Qty	Notes
12A	024400	C2AZ-7A248A	Front Pump without flange	Silicone	82-86	1	
13E	032402	NA	Extension Housing without boot	2.381	64-86	1	
13E	057405	24201470	Extension Housing with long boot		64-86	1	
13E	023404	D5AZ-7052B	Extension Housing with short boot	2.381	64-86	1	
13E	025405	C4UZ-7052A	Extension Housing - Econoline	3.130	64-86	1	
N I	023406	D5AZ-7B498A	Manual Lever		64-86	1	

SEALING RINGS

ILL	ALTO No.	REF No.	Description	Spec	Year	Qty	Notes
KT	025600	B207	Sealing Ring Kit - 7M		64-69	1	
KT	025602	B208	Sealing Ring Kit - 7M		70-77	1	
KT	025601	B215	Sealing Ring Kit - 9M		70-86	1	
KT	025601T	B215T	Sealing Ring Kit - 9T		70-86	1	
KT	025603	B211	Sealing Ring Kit - 7M		78-86	1	
14A	025100	C4AZ-7D020A	Stator Support - Reverse (front)		64-69	2	
14A	025103	D0AZ-7D020A	Stator Support - Reverse (front)		70-86	2	
15A	025101	C4AZ-7D019B	Stator Support - Forward (rear)		64-69	2	
15A	025104	D0AZ-7D019A	Stator Support - Forward (rear) - narrow	.093	70-77	2	
15A	025105	D7AZ-7D019A	Stator Support - Forward (rear) - wide	.125	78-86	2	
16D	025102	C4AZ-7D011A	Governor		64-86	3	

SNAP RINGS

ILL	ALTO No.	REF No.	Description	Spec	Year	Qty	Notes
KT	025680	NA	Kit		64-86	1	
17B	025256-052	D0AZ-7A577B	Forward & Reverse - selective	.052	64-86	AR	
17B	025256-066	D0AZ-7A577A	Forward & Reverse - selective	.066	64-86	AR	
17B	025256-080	D0AZ-7A577C	Forward & Reverse - selective	.080	64-86	AR	
17B	025256-094	D0AZ-7A577D	Forward & Reverse - selective	.094	64-86	AR	
17B	025256-106	E1AZ-7A577B	Forward & Reverse - selective	.106	81-86	AR	
18B	025260	C4AZ-7D256A	Forward Clutch retainer		64-86	1	

BUSHINGS

ILL	ALTO No.	REF No.	Description	Spec	Year	Qty	Notes
KT	025625	NA	Kit		70-86	1	
21A	025201	C0AP-7B258A	Front Pump	Babbit	64-86	1	
21A	025201X	NA	Front Pump	Bronze	64-86	1	
22A	025202	C4AZ-7B261A	Stator Support - Front		64-69	1	
22A	025210	D0AZ-7B261A	Stator Support - Front		70-86	1	
23A	025203	C4AZ-7D018B	Stator Support - Rear		64-69	1	
23A	025211	D0AZ-7D018A	Stator Support - Rear		70-86	1	
N I	025204	C4AZ-7D046A	Reverse clutch drum - lip type	Babbit	64-69	1	

FORD

C4 1964-81

C5 1982-86

BUSHINGS

ILL	ALTO No.	REF No.	Description	Spec	Year	Qty	Notes
N I	025212	D0AZ-7D046B	Reverse clutch drum	Bronze	70-86	1	
25B	025200	C6AZ-7E059A	Forward clutch hub		64-86	1	
26C	025205	C4AZ-7D065A	Sun Gear		64-86	2	
27C	025206	C4AZ-7D001A	Reverse Brake drum		64-86	1	
28D	025207	C4AZ-7025A	Case		64-86	1	
29E	023224	B3TZ-7A034A	Extension Housing		64-86	1	

WASHERS

ILL	ALTO No.	REF No.	Description	Spec	Year	Notes
KT	025635	NA	Washer Kit		70-86	

MODULATORS

ILL	ALTO No.	REF No.	Description	Spec	Year	Qty	Notes
30D	025504	C4AZ-7A377B	Modulator - White stripe		64-72	1	
30D	025520	D3OZ-7A377A	Modulator - Red stripe		73-76	1	
30D	025521	D2AZ-7A377A	Modulator - Yellow stripe		76-86	1	
30D	025522	E2TZ-7A377A	Modulator - Green stripe		75-86	1	

MOLDED PISTONS

ILL	ALTO No.	REF No.	Description	Spec	Year	Qty	Notes
31D	025302	D1AZ-7D189A	Bonded Piston - Reverse Servo		64-86	1	

MISCELLANEOUS

ILL	ALTO No.	REF No.	Description	Spec	Year	Qty	Notes
N I	025319	E1AZ-7B070A	Diaphragm Spring - forward clutch		64-86	1	

FORD
C6
1966-96

KITS

*Add Suffix SK for Super Kit

ILL	Description	Years	Friction Module	Steel Module	Overhaul Kit	Banner Kit	Master Kit
KT	Rebuilding Kit	66-E67	026752E	026753	026800	026901ELS	026901E
KT	Rebuilding Kit	67-76	026752	026753	026800	026901LS	026901
KT	Friction Module - HEG	67-76	026752HEG				
KT	Rebuilding Kit	76-96	026752A	026753	026802X	026903LS	026903
KT	Rebuilding Kit - with Heg Frictions	76-96	026752D	026753	026802X	TBA	TBA
KT	Rebuilding Kit - combo	67-96	026752C	026753	026800A	026901ALS	026901A

KITS - HI-PERFORMANCE Red Eagle®

ILL	Description	Years	Friction Module	Steel Module	Overhaul Kit	Banner Kit	Master Kit
KT	Rebuilding Kit	67-76	026752HP	026753HP	026800HP	026901HPLS	026901HP
KT	Rebuilding Kit	76-96	026752AHP	026753HP	026802HP	026903HPLS	026903HP

MISCELLANEOUS GASKETS & KIT COMPONENTS

ILL	ALTO No.	REF No.	Description	Spec	Year	Qty	Notes
1F	026816	C6AZ-7A191B	Gasket, Oil pan	Cork/Rub	66-96	1	
N I	010110B	386078-S	O Ring, Modulator & Throttle control lever		66-96	2	
N I	010115B	86036-S94	O Ring, Speedometer		66-96	1	
N I	026506	375185-S100	Nut, Band Adjusting		66-96	1	

FRICTION CLUTCHES

ILL	ALTO No.	REF No.	Description	Spec	Year	Qty	Notes
2B	026702	C6AZ-7B164B	Forward (coarse)	.060	66-67	4-5	Tan - 57T - OD: 6.358" - PL
2B	026710	D2AZ-7B164A	Forward	.061	67-76	3-5	Tan - 90T - OD: 6.358" - SM
2B	026730	F2TZ-7B164A	Forward - hardened spline	.075	76-96	4	Tan - 90T - OD: 6.362" - SM
2B	026736	NA	Forward	.075	76-96	4	HEG - 90T - OD: 6.358" - SM
3B	026712	F6TZ-7B164B	Direct	.075	66-96	3-4	Tan - 63T - OD: 6.364" - WF
3B	026732	NA	Direct	.075	66-96	3-4	HEG - 63T - OD: 6.364" - WF
3B	026712A	NA	Direct - PowerPack® Component	.062	66-96	AR	Tan - 63T - OD: 6.364" - SM
3B	026712B157	NA	Direct - PowerPack® Component	.062	66-96	AR	G3 - 63T - OD: 6.364" - SM
4D	026734	D6AZ-7B164A	Reverse	.075	66-96	4-6	HEG - 72T - OD: 6.796" - WF

FRICTION CLUTCHES - HI-PERFORMANCE - Red Eagle®

ILL	ALTO No.	REF No.	Description	Spec	Year	Qty	Notes
2B	026740	NA	Forward	.061	67-76	3-5	Red - 90T - OD: 6.362" - SM
2B	026740WF	NA	Forward	.061	67-76	3-5	Red - 90T - OD: 6.362" - WF
2B	026746	NA	Forward - hardened spline	.075	76-96	4	Red - 90T - OD: 6.362" - SM
3B	026742PL	NA	Direct	.075	66-96	3-4	Red - 63T - OD: 6.362" - PL
3B	026742A	NA	Direct - PowerPack® Component	.062	66-96	AR	Red - 63T - OD: 6.362" - PL
4D	026744	NA	Reverse	.075	66-96	4-6	Red - 72T - OD: 6.796" - SM

FRICTION CLUTCHES - HI-PERFORMANCE - UNIT PACKS (ONE Rebuild)

ILL	ALTO No.	REF No.	Description	Spec	Year	Qty	Notes
KT	026740UP5	NA	UNIT PACK - Forward	.061	67-76	1	5 Red Eagle® Frictions
KT	026746UP4	NA	UNIT PACK - Forward	.075	76-96	1	4 Red Eagle® Frictions
KT	026742UP5	NA	UNIT PACK - Direct	.075	66-96	1	5 Red Eagle® Frictions
KT	026744UP6	NA	UNIT PACK - Reverse	.075	66-96	1	6 Red Eagle® Frictions

STEEL CLUTCHES

ILL	ALTO No.	REF No.	Description	Spec	Year	Qty	Notes
5B	026701	E9TZ-7B442D	Forward	.078	66-96	4	26T - ID: 5.121"

FORD
C6
1966-96

STEEL CLUTCHES

ILL	ALTO No.	REF No.	Description	Spec	Year	Qty	Notes
5B	026711	C6AZ-7B442C	Forward - wave	.080	66-76	3-4	26T - ID: 5.121"
5B	026717	NA	Forward - selective	.095	66-96	AR	26T - ID: 5.121"
5B	026717A	NA	Forward - PowerPack® Component	.090	66-96	AR	26T - ID: 5.121"
6B	026767	C6AZ-7B070B	Forward diaphragm spring	.075	66-76	1	8T - OD: 6.445"
6B	026767A	D9AZ-7B070A	Forward diaphragm spring	.094	76-96	1	8T - OD: 6.445"
7B	026701	E9TZ-7B442D	Direct	.078	66-96	4	26T - ID: 5.121"
7B	026701A	NA	Direct - PowerPack® Component	.059	66-96	AR	26T - ID: 5.121"
8D	026703	E9TZ-7B442E	Reverse	.068	66-96	4-6	18T - ID: 5.697"
5B	026701K	NA	Forward & Direct	.078	66-96	4/4	26T - ID: 5.121"

STEEL CLUTCHES - HI-PERFORMANCE - Kolene®

ILL	ALTO No.	REF No.	Description	Spec	Year	Qty	Notes
5B	026701AK	NA	Forward PowerPack® Component	.059	66-96	AR	Kol - 26T - ID: 5.121"
5B	026701AHK	NA	Direct PowerPack® Comp.- w/Turbulator holes	.059	66-96	4	Kol - 26T - ID: 5.121"
8D	026703K	NA	Reverse	.068	66-96	4-6	Kol - 18T - ID: 5.697"

STEEL CLUTCHES - HI-PERFORMANCE - UNIT PACKS (ONE Rebuild)

ILL	ALTO No.	REF No.	Description	Spec	Year	Qty	Notes
KT	026701KUP4	NA	UNIT PACK - Forward or Direct	.078	66-96	1	4 Kolene® Steels
KT	026703KUP6	NA	UNIT PACK - Reverse	.068	66-96	1	6 Kolene® Steels

PRESSURE PLATES

ILL	ALTO No.	REF No.	Description	Spec	Year	Qty	Notes
9B	026760-630	NA	Forward - apply (top) PowerPack® Comp.	.248	66-96	1	
10B	026760A	C6AZ-7B066A	Forward - backing (bottom) with bevel	.300	66-96	1	
10B	026760A673	NA	Forward - backing (bottom) with bevel PowerPack® Comp.	.265	66-96	1	
11B	026713	NA	Direct - apply (top) PowerPack® Comp.	.125	66-96	1	
12D	TBA	C6AZ-7B066C	Reverse - backing	.438	66-96	1	

OEI® Original Equipment Improvements

ILL	ALTO No.	REF No.	Description	Spec	Year	Qty	Notes
KT	026755A	NA	PowerPack® - Forward clutch		66-96	1	
KT	026755	NA	PowerPack® - Forward clutch - Hi Perf.		66-96	1	Red Eagle® & Kolene®
KT	026757	NA	PowerPack® - Direct Clutch		66-96	1	
KT	026757HP	NA	PowerPack® - Direct clutch - Hi Perf.		66-96	1	Red Eagle® & Kolene®
KT	026985	SK® 6	Shift Kit®	Transgo®	66-96	1	
KT	026991	67-1&2	Reprogramming Kit™ Tow & Go / Competition	Transgo®	67-96	1	
KT	026991A	67-3	Reprogramming Kit™ convets to manual shift	Transgo®	67-96	1	

BANDS

ILL	ALTO No.	REF No.	Description	Spec	Year	Qty	Notes
13A	026959	D9AZ-7D034B	Intermediate - Flex	1.50 - Tan	66-96	1	

BANDS - HI-PERFORMANCE - Red Eagle® or Kevlar®

ILL	ALTO No.	REF No.	Description	Spec	Year	Qty	Notes
13A	026969	D9AZ-7D034B	Intermediate - Flex	1.50 - Red	66-96	1	Red Eagle®
13A	026968	D9AZ-7D034B	Intermediate - Flex PowerBand®	2.50 - Red	66-96	1	Red Eagle®

FORD
C6
1966-96

FILTERS

ILL	ALTO No.	REF No.	Description	Spec	Year	Qty	Notes
14F	026940	C6AZ-7A098B	Filter - flat		66-74	1	
14F	026944	D5AZ-7A098B	Filter - 2wd		75-96	1	
14F	026946	D3TZ-7A098B	Filter - 4wd (with rubber grommet)		74-96	1	

METAL CLAD SEALS

ILL	ALTO No.	REF No.	Description	Spec	Year	Qty	Notes
15A	024400	C2AZ-7A248A	Front Pump		66-91	1	
15A	026400	F2VY-7A248A	Front pump with flange	Viton®	92-On	1	
16F	031401	D5AZ-7052A	Extension Housing without boot		66-96	1	
16F	023405	F6TZ-7052A	Extension Housing with boot		66-96	1	
16F	023402	B3TZ-7A011A	Extension Housing - bolt on yoke	3.066	68-96	1	
N I	023406	D5AZ-7B498A	Manual Lever		66-96	1	

SEALING RINGS

ILL	ALTO No.	REF No.	Description	Spec	Year	Qty	Notes
KT	026600	B220	Sealing Ring Kit - 7M		66-96	1	
KT	026600T	B223	Sealing Ring Kit - 7T		66-96	1	
17A	026100	C6AZ-7D025A	Front pump stator		66-96	2	
18B	026101	C6AZ-7D019B	Forward drum		66-96	2	
19E	025102	C4AZ-7D011A	Governor		66-96	3	

SNAP RINGS

ILL	ALTO No.	REF No.	Description	Spec	Year	Qty	Notes
21B	026251-058	377437-S	Forward & Direct PP retainer - selective	.058	66-96	AR	
21B	026251-062	377126-S	Forward & Direct PP retainer - selective	.062	66-96	AR	
21B	026251-076	377127-S	Forward & Direct PP retainer - selective	.076	66-96	AR	
21B	026251-090	377128-S	Forward & Direct PP retainer - selective	.085	66-96	AR	
21B	026251-094	377444-S	Forward & Direct PP retainer - selective	.094	66-96	AR	
23C	026256	377300-S	Sun Gear		66-96	2	
24C	026258A	387031-S5	Output shaft hub	.075	77-96	1	

BUSHINGS

ILL	ALTO No.	REF No.	Description	Spec	Year	Qty	Notes
KT	026625	NA	Bushing Kit		66-96	1	
31A	026202	C6AZ-7B258A	Front Pump body	Bronze	66-96	1	
31A	026202X	NA	Front Pump body	Babbit	66-96	1	
32A	026200	F2V07B261AA	Stator Support - Front		66-96	1	
33A	026201	C6AZ-7D018A	Stator Support - Rear		66-96	1	
34A	026203	C6AZ-7D046B	Intermediate Brake drum - Front	.375	66-96	1	
35A	026204	C6AZ-7D046A	Intermediate Brake drum - Rear	1.250	66-96	1	
36C	026205	C6AZ-7D065A	Sun Gear		66-96	2	
37F	026207	F2TZ-7025A	Case - Front (with oil grooves)		66-96	1	
37F	026207A	36008A	Case - Front - oversize	Sonnax	66-96	1	
N I	026208	F2TZ-7025B	Case - Rear (without oil grooves)		66-96	1	
N I	026210	36008B	Case - oversize / replaces 2pc with 1	Sonnax	66-96	1	with oil grooves
38F	026209	C1VY-7A034A	Extension Housing - Lincoln only		66-69	1	
38F	023225	B5AZ-7A034D	Extension Housing - except Lincoln & Truck		66-96	1	

FORD
C6
1966-96

WASHERS

ILL	ALTO No.	REF No.	Description	Spec	Year	Qty	Notes
KT	026635	NA	Washer Kit		66-96	1	

MODULATORS

ILL	ALTO No.	REF No.	Description	Spec	Year	Qty	Notes
39F	025504	C4AZ-7A377B	Modulator - White stripe		66-72	1	Screw-in
39F	026523	D4AZ-7A377B	Modulator - Pink stripe		73-76	1	Push-in
39F	026524	D5AZ-7A377A	Modulator - Purple stripe		75-96	1	Push-in
39F	026525	D7OZ-7A377A	Modulator - Green stripe		77-96	1	Push-in

MOLDED PISTONS

ILL	ALTO No.	REF No.	Description	Spec	Year	Qty	Notes
N I	026300	D6TZ-7D021A	Piston Int Servo Green		66-96	1	
		D5TP-7E221CA					
N I	026301	D5UZ-D021A	Piston Int Servo Red		66-96	1	
		D5TP-7E221DA					
N I	026302	D5TZ-D021B	Piston Int Servo Blue		66-96	1	
		D5TP-7E221DA					
N I	026303	D7AZ-7D021A	Piston Int Servo Yellow		66-96	1	
		D7TP-7E211AA					

FORD

FORD - CD4E 1994-On
MAZDA - LA4AEL 1994-On

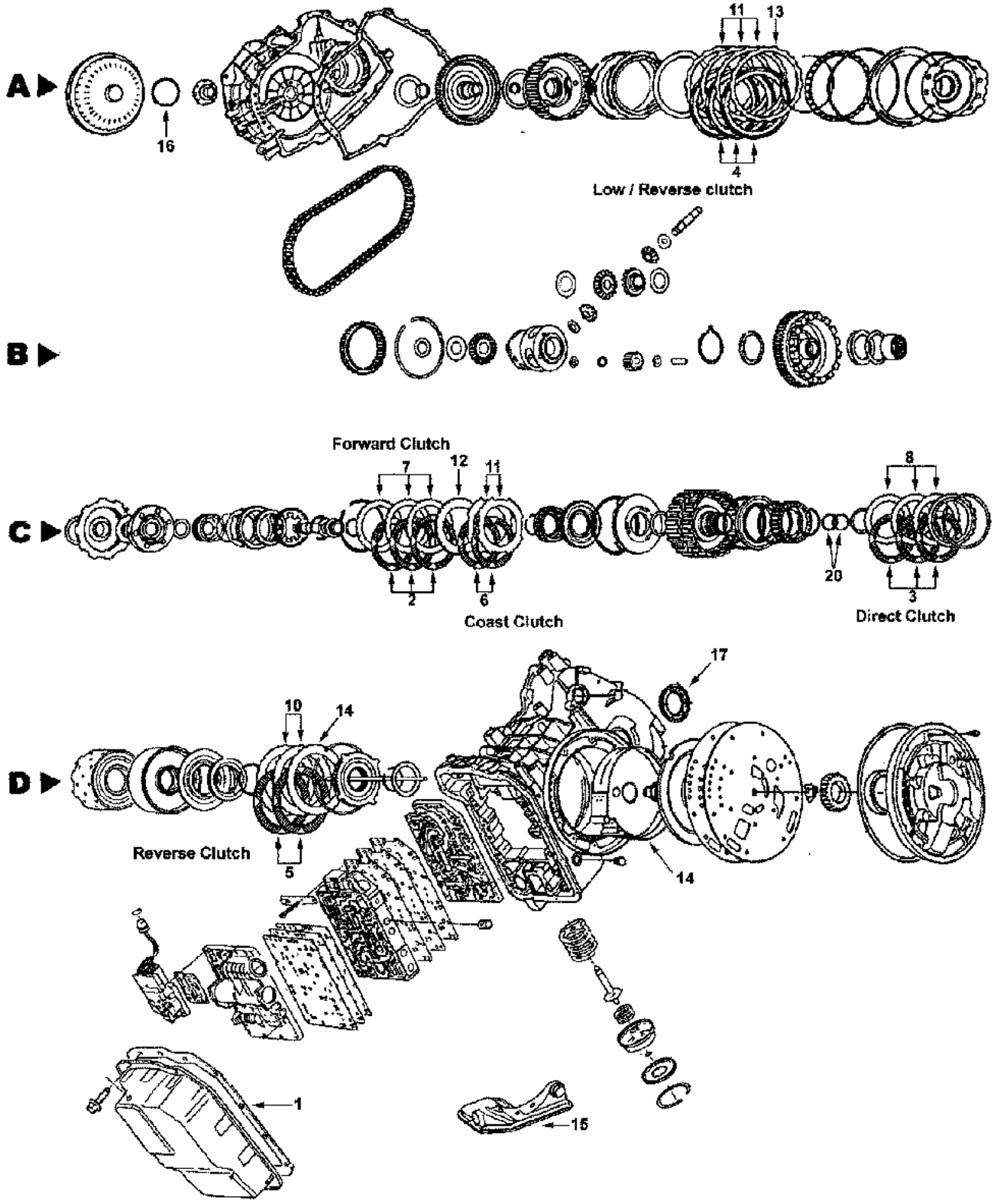

FORD

FORD - CD4E 1994-On
MAZDA - LA4AEL 1994-On

KITS

*Add Suffix SK for Super Kit

ILL	Description	Years	Friction Module	Steel Module	Overhaul Kit	Banner Kit	Master Kit
KT	Rebuilding Kit - thin & thick direct steels	94-02	112752	112753	112800	112901LS	112901
KT	Rebuilding Kit - thin & thick direct steels	03-On	112752	112753	112802	112903LS	112903

MISCELLANEOUS GASKETS & KIT COMPONENTS

ILL	ALTO No.	REF No.	Description	Spec	Year	Qty	Notes
1D	112816	F3RZ-7F396A	Gasket, VB cover		94-On	1	

FRICTION CLUTCHES

ILL	ALTO No.	REF No.	Description	Spec	Year	Qty	Notes
2C	112700	F3RZ-7B164B	Forward	.065	94-On	3	Tan - 32T - OD: 5.275" - PL
3C	112702	F6RZ-7B164A	Direct	.065	94-On	3-4	HEG - 24T - OD: 5.275" - PL
4A	112704	F3RZ-7B164C	Low / Reverse	.065	94-On	3-4	Tan - 32T - OD: 8.611" - PL
5D	112706	F3RZ-7B164A	Reverse	.065	94-On	2	Tan - 36T - OD: 6.075" - PL
6C	112708	F7RZ-7B164AA	Coast	.065	94-On	2	HEG - 24T - OD: 4.842" - PL

STEEL CLUTCHES

ILL	ALTO No.	REF No.	Description	Spec	Year	Qty	Notes
7C	112701	F3RZ-7B442C	Forward	.069	94-On	3	32T - ID: 4.263"
8C	112703	F3RZ-7B442E	Direct - use with F4RZ-7G120A drum	.079	94-3/96	3-4	32T - ID: 4.105"
8C	112703A300	F5RZ-7B442A	Direct - use with F5RZ-7G120A drum	.118	3/96-On	3	28T - ID: 4.105"
9A	112705	F3RZ-7B442B	Low / Reverse	.069	94-On	3-4	18T - ID: 7.800"
10D	112707	F3RZ-7B442A	Reverse	.069	94-On	2	32T - ID: 4.759"
11C	112709	F3RZ-7B442D	Coast	.069	94-On	2	20T - ID: 3.769"

PRESSURE PLATES

ILL	ALTO No.	REF No.	Description	Spec	Year	Qty	Notes
12C	112760	F3RZ-7B066A	Forward	.157	94-98	1	
12C	TBA	F8RZ-7B066BA	Forward		98-On	1	
13A	112705-210	F3RZ-7B066F	Low / Reverse - selective	.082	94-On	1	
13A	112705-230	F3RZ-7B066E	Low / Reverse - selective	.090	94-On	1	
13A	112705-250	F3RZ-7B066D	Low / Reverse - selective	.098	94-On	1	
13A	112705-270	NA	Low / Reverse - selective	.106	94-On	1	
13D	112762	F3RZ-7D408A	Reverse	.157	94-On	1	
13D	112762A576	NA	Reverse -oversize	.227	94-On	1	

OEI® Original Equipment Improvements

ILL	ALTO No.	REF No.	Description	Spec	Year	Qty	Notes
N I	112756	NA	DrumSaver® Kit - Forward clutch (OEI® wave cushion spring wiith external spline)		98-On	1	3 Fr, 3 St, 1 Wave Spring
KT	112985	SK®CD4E-Jr	Shift Kit®	Transgo®	94-96	1	

BANDS

ILL	ALTO No.	REF No.	Description	Spec	Year	Qty	Notes
14D	112950	F3RZ-7D034A	Intermediate / Overdrive - 1.653" wide	Tan	94-95	1	
14D	112952	F4RZ-7D034A	Intermediate / Overdrive - 2.047" wide	Tan	96-On	1	

FILTERS

ILL	ALTO No.	REF No.	Description	Spec	Year	Qty	Notes
15D	112940	F3RZ-7A098AA	Filter - Aftermarket		94-On	1	
15D	112940A	F3RZ-7A098AA	Filter - OE		94-On	1	

FORD

FORD - CD4E 1994-On

MAZDA - LA4AEL 1994-On

METAL CLAD SEALS

ILL	ALTO No.	REF No.	Description	Spec	Year	Qty	Notes
16A	112400	F3RZ-7F401A	Converter Housing		94-On	1	
17D	112425	F3RZ-1177A	Axle		94-On	2	
N I	112426	YL8Z-S177AA	Differential Axle AWD		94-On	2	
N I	051406	E1FZ-7B498A	Manual Lever - large		94-On	1	
N I	069410	E6DZ-7F337A	Manual Lever - small		94-On	1	

SEALING RINGS

ILL	ALTO No.	REF No.	Description	Spec	Year	Qty	Notes
KT	112600	B271	Sealing Ring Kit - 10T		94-On	1	

BUSHINGS

ILL	ALTO No.	REF No.	Description	Spec	Year	Qty	Notes
KT	112625	NA	Bushing Kit		94-On	1	

ELECTRONIC CONTROL COMPONENTS

ILL	ALTO No.	REF No.	Description	Spec	Year	Qty	Notes
N I	112505	F6RZ-7G391A	Solenoid Assembly		94-On	1	

MOLDED PISTONS

ILL	ALTO No.	REF No.	Description	Spec	Year	Qty	Notes
KT	112670	NA	Piston Kit		93-02	1	4 Pistons
KT	112671	NA	Piston Kit		03-On	1	3 Pistons
N I	112302	F3RP-7H243AC	2/4 Servo cover		94-On	1	
N I	112305	F3RZ-7A262C	Coast clutch drum		94-97	1	
N I	112303	F8RZ-7A262BA	Coast clutch drum		98-On	1	
N I	112304	F3RP-7E079BB	Reverse		94-On	1	

FORD

E4OD 1989-98

4R100 1999-04

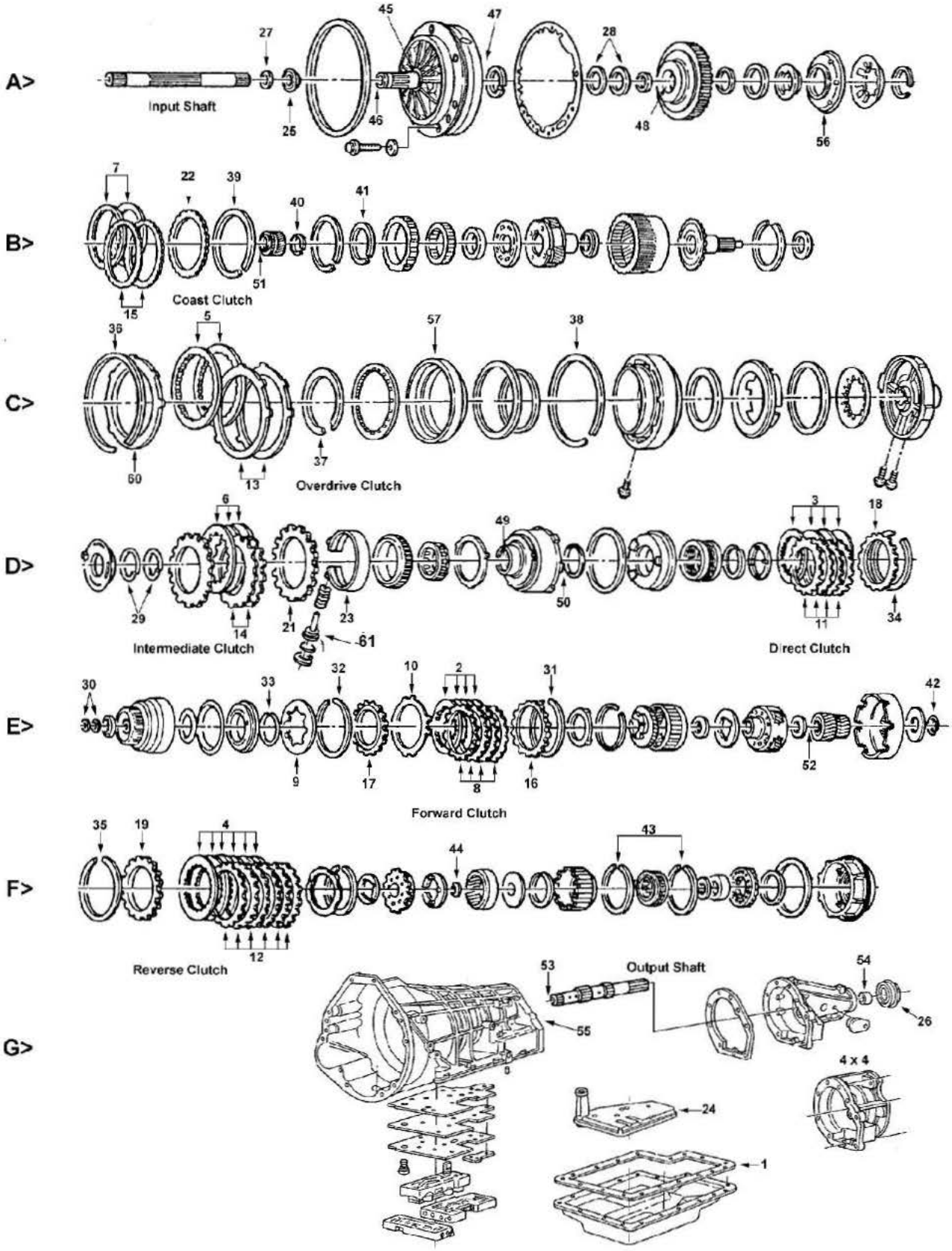

FORD

E4OD 1989-98
4R100 1999-04

KITS

*Add Suffix SK for Super Kit

ILL	Description	Years	Friction Module	Steel Module	Overhaul Kit	Banner Kit	Master Kit
KT	Rebuilding Kit	89-95	026752B	026753A	026804	026907LS	026907
KT	Rebuilding Kit	96-4/97	026752B	026753A	026804A	026907ALS	026907A
KT	Rebuilding Kit	5/97-98	026752F	026753F	026804A	026907BLS	026907B
KT	Rebuilding Kit - 4R100 with Molded Pistons	99-00	026752F	026753F	026806	026909LS	026909
KT	Rebuilding Kit - 4R100 with Molded Pistons	01-04	026752G	026753F	026806	026909ALS	026909A
KT	Rebuilding Kit - 4R100 7.3 Diesel with Molded Pistons	01-04	026752J	026753J	026806	026909DLS	026909D
KT	Rebuilding Kit - 4R100 7.3 Diesel without Molded Pistons	01-04	026752J	026753J	026806X	026909DXLS	026909DX

KITS - HI-PERFORMANCE Red Eagle®

ILL	Description	Years	Friction Module	Steel Module	Overhaul Kit	Banner Kit	Master Kit
KT	Rebuilding Kit - E4OD	89-95	026752BHP	026753AHP	026804FT	026907HPLS	026907HP

KITS - HI-PERFORMANCE with PowerPack®

ILL	Description	Years	Friction and Steel Module	Overhaul Kit	Banner Kit	Master Kit
KT	Rebuilding Kit - with Direct PowerPack®	88-95	026750BHPPWR	026804FT	NA	026907HPPWR
KT	Rebuilding Kit - with Forward, Direct & Overdrive	89-95	026750FX	026804FT	NA	026907X
KT	Rebuilding Kit - with Direct PowerPack®	96-4/97	026750BHPPWR	026804AFT	NA	26907AHPPWR
KT	Rebuilding Kit - with Direct PowerPack®	5/97-98	026750FHPPWR	026804AFT	NA	26907BHPPWR
KT	Rebuilding Kit - with Forward, Direct & Overdrive	96-98	026750FX	026804AFT	NA	026907AX
KT	Rebuilding Kit - 4R100 with Direct PowerPack®	99-00	026750FHPPWR	026806FT	NA	026909HPPWR
KT	Rebuilding Kit - 4R100 with Forward, Direct,	99-04	026750GX	026806FT	NA	026909X
	All above kits with hardened steel Forward Frictions					

MISCELLANEOUS GASKETS & KIT COMPONENTS

ILL	ALTO No.	REF No.	Description	Spec	Year	Qty	Notes
1G	026816A	E9TZ-7A191A	Gasket, Oil pan	Cork/Rub	89-95	1	
1G	026816B	F6TZ-7A191A	Gasket, Oil pan	M.Rubber	96-04	1	
N I	010115B	87036-S94	O Ring, Speedometer		89-04	1	

FRICTION CLUTCHES

ILL	ALTO No.	REF No.	Description	Spec	Year	Qty	Notes
2E	026730	F2TZ-7B164A	Forward with hardened spline	.075	89-04	4	Tan - 90T - OD: 6.362" - SM
2E	026736	NA	Forward	.075	89-04	4	HEG - 90T - OD: 6.358" - SM
3D	026712	F6TZ-7B164B	Direct	.077	89-04	4-5	Tan - 63T - OD: 6.364" - WF
3D	026712SM	E9TZ-7B164D	Direct	.077	89-04	4-5	Tan - 63T - OD: 6.360" - SM
3D	026732	F6TZ-7B164B	Direct	.077	89-04	4-5	HEG - 63T - OD: 6.364" - WF
3D	026712A	NA	Direct - PowerPack® Component	.062	89-04	AR	Tan - 63T - OD: 6.360" - SM
4F	026704	D6AZ-7B164A	Reverse	.075	89-4/97	6	Tan - 72T - OD: 6.796" - WF
4F	026734	NA	Reverse	.075	89-4/97	6	HEG - 72T - OD: 6.796" - WF
4F	026704A	F7TZ-7B164AA	Reverse - Grob (stamped steel) drum	.078	5/97-04	5-6	Tan - 24T - OD: 6.796" - WF
4F	026704AA	F81Z-7B164DA	Reverse - Grob drum (anti skid groove)	.078	5/97-04	5-6	HEG - 24T - OD: 6.796" - SP
5C	026722	E9TZ-7B164A	Overdrive	.078	89-4/97	2-3	Tan - 64T - OD: 8.700" - WF
5C	026722SM	F81Z-7B164CA	Overdrive	.078	5/97-99	2-3	Tan - 64T - OD: 8.691" - SM
5C	026722ASM	F81Z-7B164BA, 3C3Z-7B164AA	Overdrive	.078	5/97-04	2-3	Tan - 32T - OD: 8.691" - SM
5C	026722A	F81Z-7B164AA	Overdrive - Super Duty PU trucks	.078	99	3	Tan - 32T - OD: 8.691" - PL
5C	026722B177	NA	Overdrive - PowerPack® Component	.070	98-04	AR	HEG - 32T - OD: 8.691" - WF
6D	026724A	1C3Z-7B164BA	Intermediate	.078	5/97-04	3-4	HEG - 50T - OD: 7.800" - SP
6D	026724B190	1C3Z-7B164AA	Intermediate - Diode clutch	.076	01-04	3	HEG - 60T - OD: 7.800" - SP

FORD

E4OD 1989-98
4R100 1999-04

FRICTION CLUTCHES

7B	026726	E9TZ-7B164C	Coast	.078	89-04	2	Tan - 60T - OD: 6.600" - PL

FRICTION CLUTCHES - HI-PERFORMANCE - Red Eagle®

ILL	ALTO No.	REF No.	Description	Spec	Year	Qty	Notes
2E	026746	NA	Forward - hardened spline	.075	89-04	4	Red - 90T - OD: 6.362" - SM
3D	026742PL	NA	Direct	.077	89-04	4-5	Red - 63T - OD: 6.362" - PL
3D	026742A	NA	Direct - PowrPack® Component	.062	89-04	AR	Red - 63T - OD: 6.362" - PPL
4F	026744	NA	Reverse	.075	89-4/97	6	Red - 72T - OD: 6.796" - SM
4F	026744AA	NA	Reverse - Grob drum (anti skid groove)	.078	5/97-04	3	Red - 24T - OD: 6.796" - BR
5C	026722B	NA	Overdrive - Super Duty PU trucks	.078	99	3	Red - 32T - OD: 8.691" - PL
5C	026722BSM	NA	Overdrive - w/ grob smooth	.079	5/97-04	2-3	Red - 32T - OD: 8.691" - SM
5C	026722C	NA	Overdrive	.078	89-4/97	2-3	Red - 64T - OD: 8.695" - WF
5C	026722C177	NA	Overdrive - PowerPack® Component	.070	89-4/97	2-3	Red - 64T - OD: 8.695" - WF
5C	026722D177	NA	Overdrive - PowerPack® Component	.070	5/97-04	2-3	G3 - 64T - OD: 8.695" - WF
5C	026722CSM	NA	Overdrive - w/ cast iron smooth	.079	5/97-99	2-3	Red - 64T - OD: 8.700" - SM
6D	026704B198	NA	Intermediate - Spiral	.079	88-04	3	G3 - 60T - OD: 7.793" - BR
6D	026724C190	NA	Intermediate - anti-skid	.076	01-04	3	Red - 60T - OD: 7.793" - BR
6D	026724D	NA	Intermediate	.078	89-4/97	3-4	Red - 50T - OD: 7.793" - WF
6D	026724E	NA	Intermediate	.078	5/97-00	3-4	Red - 50T - OD: 7.794" - BR
7B	026726A	NA	Coast	.078	89-04	2	Red - 60T - OD: 6.596" - PL

FRICTION CLUTCHES - HI-PERFORMANCE - UNIT PACKS (ONE Rebuild)

ILL	ALTO No.	REF No.	Description	Spec	Year	Qty	Notes
KT	026746UP4	NA	Forward	.075	89-04	1	4 Red Eagle® Frictions
KT	026742UP5	NA	Direct	.077	89-04	1	5 Red Eagle® Frictions
KT	026744UP6	NA	Reverse	.075	89-4/97	1	6 Red Eagle® Frictions

STEEL CLUTCHES

ILL	ALTO No.	REF No.	Description	Spec	Year	Qty	Notes
8E	026701	E9TZ-7B442D	Forward	.078	89-04	4	26T - ID: 5.121"
8E	026717A	NA	Forward - PowerPack® Component	.090	89-04	AR	26T - ID: 5.121"
9E	026767A	D9AZ-7B070A	Forward diaphragm spring	.094	89-04	1	8T - OD: 6.445"
11D	026701	E9TZ-7B442D	Direct	.078	89-04	4	26T - ID: 5.121"
11D	026701A	NA	Direct - PowerPack® Component	.059	89-04	AR	26T - ID: 5.121"
12F	026703	E9TZ-7B442E	Reverse	.068	89-04	6	18T - ID: 5.697"
12F	026703A	NA	Reverse - PowerPack® Component	.081	89-04	AR	18T - ID: 5.697"
13C	026723	E9TZ-7B442A	Overdrive	.080	89-04	2-3	6T - ID: 7.467"
14D	026725	E9TZ-7B442B	Intermediate	.080	89-98	2	30T - ID: 6.210"
14D	026761	E9TZ-7B066C	Intermediate	.123	99-04	3	26T - ID: 6.210"
15B	026727	E9TZ-7B442C	Coast	.080	89-99	2	60T - ID: 5.850"
15B	026727A	F81Z-7B442AA	Coast	.080	99-04	2	32T - ID: 5.850"

STEEL CLUTCHES - HI-PERFORMANCE - Kolene®

ILL	ALTO No.	REF No.	Description	Spec	Year	Qty	Notes
8E	026701K	NA	Forward	.078	89-04	4	Kol - 26T - ID: 5.121"
8E	026717AK	NA	Forward - PowerPack® Component	.090	89-04	AR	Kol - 26T - ID: 5.121"
11D	026701K	NA	Direct	.078	89-04	4	Kol - 26T - ID: 5.121"
11D	026701AK	NA	Direct - PowerPack® Component	.059	89-04	AR	Kol - 26T - ID: 5.121"
11D	026701AHK	NA	Direct - thin with Turbulator holes	.059	89-04	AR	Kol - 26T - ID: 5.121"
13C	026723K200	NA	Overdrive	.080	89-04	2-3	Kol - 6T - ID: 7.467"
14D	026725K	NA	Intermediate	.080	89-98	2	Kol - 30T - ID: 6.210"
14D	026761K	NA	Intermediate	.123	89-98	1	Kol - 26T - ID: 6.210"

FORD

E4OD 1989-98
4R100 1999-04

STEEL CLUTCHES - HI-PERFORMANCE - Kolene®

ILL	ALTO No.	REF No.	Description	Spec	Year	Qty	Notes
12F	026703K	NA	Reverse	.068	89-04	6	Kol - 18T - ID: 5.697"
15B	026727K	NA	Coast	.080	89-99	2	Kol - 60T - ID: 5.850"
15B	026727AK	NA	Coast	.079	99-04	2	Kol - 32T - ID: 5.850"

STEEL CLUTCHES - HI-PERFORMANCE - UNIT PACKS (ONE Rebuild)

ILL	ALTO No.	REF No.	Description	Spec	Year	Qty	Notes
KT	026701KUP4	NA	UNIT PACK - Forward or Direct	.078	89-04	1	4 Kolene® Steels
KT	026703KUP6	NA	UNIT PACK - Reverse	.068	89-04	1	6 Kolene® Steels

PRESSURE PLATES

ILL	ALTO No.	REF No.	Description	Spec	Year	Qty	Notes
16E	026760-630	NA	Forward - apply (top) PowerPack® Comp.	.248	66-96	1	
17E	026760A	C6AZ-7B066A	Forward - backing (bottom) with bevel	.300	89-04	1	
17E	026760A673	NA	Forward - backing (bottom) with bevel PowerPack® Comp.	.265	89-04	1	
18D	TBA	F5TZ-7B066A	Direct - apply (top)	.341	99-04	1	
18D	026713	NA	Direct - apply (top) PowerPack® Comp.	.125	89-04	1	
60C	026763-487	NA	Overdrive - PowerPack® Comp.	.192	97-04	1	
19F	026764	E9TZ-7B066A	Reverse - backing	.550	89-04	1	
19F	TBA	F7TZ-7B066AA	Reverse - backing	.710	97-04	1	
20D	026761	E9TZ-7B066C	Intermediate - apply (top)	.123	89-98	1	
21D	026765P146	F1TZ-7B066A	Intermediate - backing (bottom)	.578	90-98	1	
21D	026765P083	F81Z-7B066BA	Intermediate - backing (bottom)	.326	99-04	1	
22B	026766	E9TZ-7B066E	Coast - backing (bottom)	.250	89-98	1	
22B	TBA	F81Z-7B066AA	Coast - backing (bottom)		99-04	1	

OEI® Original Equipment Improvements

ILL	ALTO No.	REF No.	Description	Spec	Year	Qty	Notes
KT	026755	NA	PowerPack® - Forward Clutch		99-04	1	Red Eagle® & Kolene®
KT	026756	NA	PowerPack® - Intermediate 4R100		99-04	1	
KT	026757	NA	PowerPack® - Direct Clutch		89-04	1	Increased capacity
KT	026757HP	NA	PowerPack® - Direct Clutch (Hi - Perf.)		89-04	1	
KT	026758A	NA	PowerPack® - Overdrive Clutch-Early		89-98	1	
KT	026758	NA	PowerPack® - Overdrive Clutch-Late		99-04	1	
KT	026759	NA	ClearanceKit™		89-04	1	Fixes delayed Reverse
KT	026986	SK® E4OD	Shift Kit®	Transgo®	89-04	1	
KT	026992	E4OD-HD2	Reprogramming Kit™	Transgo®	89-04	1	
KT	026993	4R100-HD2	Reprogramming Kit™	Transgo®	98-04	1	

BANDS

ILL	ALTO No.	REF No.	Description	Spec	Year	Qty	Notes
23D	026951	E9TZ-7D034A	Intermediate (coast)	Tan	89-04	1	

FILTERS

ILL	ALTO No.	REF No.	Description	Spec	Year	Qty	Notes
24G	026948A	YC3Z-7A098AA	Filter - 2wd all plastic		89-04	1	
24G	026948B	YC3Z-7A098BA	Filter - 4wd all plastic		89-04	1	
24G	026948C	NA	Filter - 2wd metal/plastic		89-04	1	
24G	026948D	NA	Filter - 4wd metal/plastic		89-04	1	

FORD

E4OD 1989-98
4R100 1999-04

METAL CLAD SEALS

ILL	ALTO No.	REF No.	Description	Spec	Year	Qty	Notes
25A	026400	C2AZ-7A248A	Front Pump w/flange silicone		89-04	1	
25A	026400B	E9TZ-7A248B	Front Pump E4OD, 4R100 Viton		89-04	1	
26G	031401	NA	Extension Housing without boot	2.508	89-97	1	
26G	023405	D5AZ-7052A	Extension Housing with boot	2.508	89-97	1	
26G	026402	F81Z-7052AA	Extension Housing with boot	3.180	98-04	1	
N I	023406	D5AZ-7B498A	Manual Lever		89-04	1	

SEALING RINGS

ILL	ALTO No.	REF No.	Description	Spec	Year	Qty	Notes
KT	026601	B247	Sealing Ring Kit - 4M / 3T		89-04	1	
KT	026601T	B246	Sealing Ring Kit - 7T		89-04	1	
27A	026103	E9TZ-7L323A	Input Shaft (Lock-up)	Teflon	89-04	1	
28A	026104	E9TZ-7G402A	Front Pump stator	Teflon	89-04	2	
29D	026100	C6AZ-7D025A	Center Support	Metal	89-04	2	
30E	026101	C6AZ-7D019B	Forward drum	Metal	89-04	2	

SNAP RINGS

ILL	ALTO No.	REF No.	Description	Spec	Year	Qty	Notes
KT	026681	NA	Kit		89-04	1	
31E	026251-058	377437-S	Forward PP retainer - selective	.058	89-04	AR	
31E	026251-076	377127-S	Forward PP retainer - selective	.076	89-04	AR	
31E	026251-094	377444-S	Forward PP retainer - selective	.094	89-04	AR	
32E	026251-076	377127-S	Forward clutch spring retainer	.076	89-04	1	
34D	026251-058	377437-S	Direct PP retainer - selective	.058	89-04	AR	
34D	026251-062	377126-S	Direct PP retainer - selective	.062	89-04	AR	
34D	026251-076	377127-S	Direct PP retainer - selective	.076	89-04	AR	
34D	026251-090	377128-S	Direct PP retainer - selective	.085	89-04	AR	
34D	026251-094	377444-S	Direct PP retainer - selective	.094	89-04	AR	
35F	026268	E9TZ-7D483J	Reverse PP retainer	.078	89-04	1	
40B	026256	377300-S	Overdrive Sun Gear		89-04	1	
42E	026256	377300-S	Forward Sun Gear		89-04	1	
44F	026258A	387031-S	Output shaft hub		89-04	1	
44F	026263	NA	One Way Clutch		64-On	1	
44F	026265	NA	Direct Clutch - Retainer		64-On	1	
44F	026266-086	NA	Coast	.086	89-On	1	

BUSHINGS

ILL	ALTO No.	REF No.	Description	Spec	Year	Qty	Notes
KT	026630	NA	Bushing Kit Short - E4OD (2 bushings)		89-04	1	front pump, ext hsg
KT	026630A	NA	Bushing Kit Short - 4R100 (4 bushings)		89-04	1	front pump, ext hsg, case, sungear
45A	026202	C6AZ-7B258A	Front Pump body	Bronze	89-04	1	
45A	026202X	NA	Front Pump body	Babbit	89-04	1	
45A	049200	E9TZ-7B258A	Front Pump body - Bronze	.695	89-04	1	anti - walkout
46A	026200	F2V07B261AA	Stator Support - Front		89-04	1	
47A	026201	C6AZ-7D018A	Stator Support - Rear		89-04	1	Some 4R100 uses bearing
48A	041203	NA	Coast Clutch drum (cast iron)	2.368	89-97	1	
48A	026204A	NA	Coast Clutch drum (stamped steel)		98-04	1	
49D	026203	C6AZ-7D046B	Intermediate Brake drum - Front	.375	89-04	1	
50D	026204	C6AZ-7D046A	Intermediate Brake drum - Rear	1.250	89-04	1	
51B	026200	C6AZ-7B261C	Overdrive Sun Gear		89-04	1	

FORD

E4OD 1989-98
4R100 1999-04

BUSHINGS

ILL	ALTO No.	REF No.	Description	Spec	Year	Qty	Notes
52E	026205	C6AZ-7D065A	Forward Sun Gear		89-04	2	
53G	041209	NA	Output Shaft	Bronze	89-94	1	
54G	023225	F2TZ-7A034A	Extension Housing		89-04	1	
54G	023225X	F81Z-7A034AB	Extension Housing - Large OD / Trucks		99-04	1	teflon coated
55G	026207	F2TZ-7025A	Case - with oil grooves		89-04	1	
55G	026207A	36008A	Case - oversize	Sonnax	89-04	1	

WASHERS

ILL	ALTO No.	REF No.	Description	Spec	Year	Qty	Notes
KT	026636	NA	Washer Kit (12 plastic)		89-04	1	use w/ 4 pinion planets
N I	026159	NA	Washer, Coller Bypass	.667	89-04	1	
N I	026158	NA	Washer, Coller Bypass	.535	89-04	1	

MOLDED PISTONS

ILL	ALTO No.	REF No.	Description	Spec	Year	Qty	Notes
61D	026304	F6TP-7B464AA	Bonded Piston - Servo		99-04	1	
56A	026306	F81Z-7A262A	Bonded Piston - Coast Clutch		99-04	1	
57C	026305	F6TZ-7A262AA	Bonded Piston - Overdrive		99-04	1	

MISCELLANEOUS

ILL	ALTO No.	REF No.	Description	Spec	Year	Qty	Notes
N I	026767	C6AZ-7B070B	Diaphragm Spring - forward clutch	.071	89-98	1	

FORD
FMX
1968-81

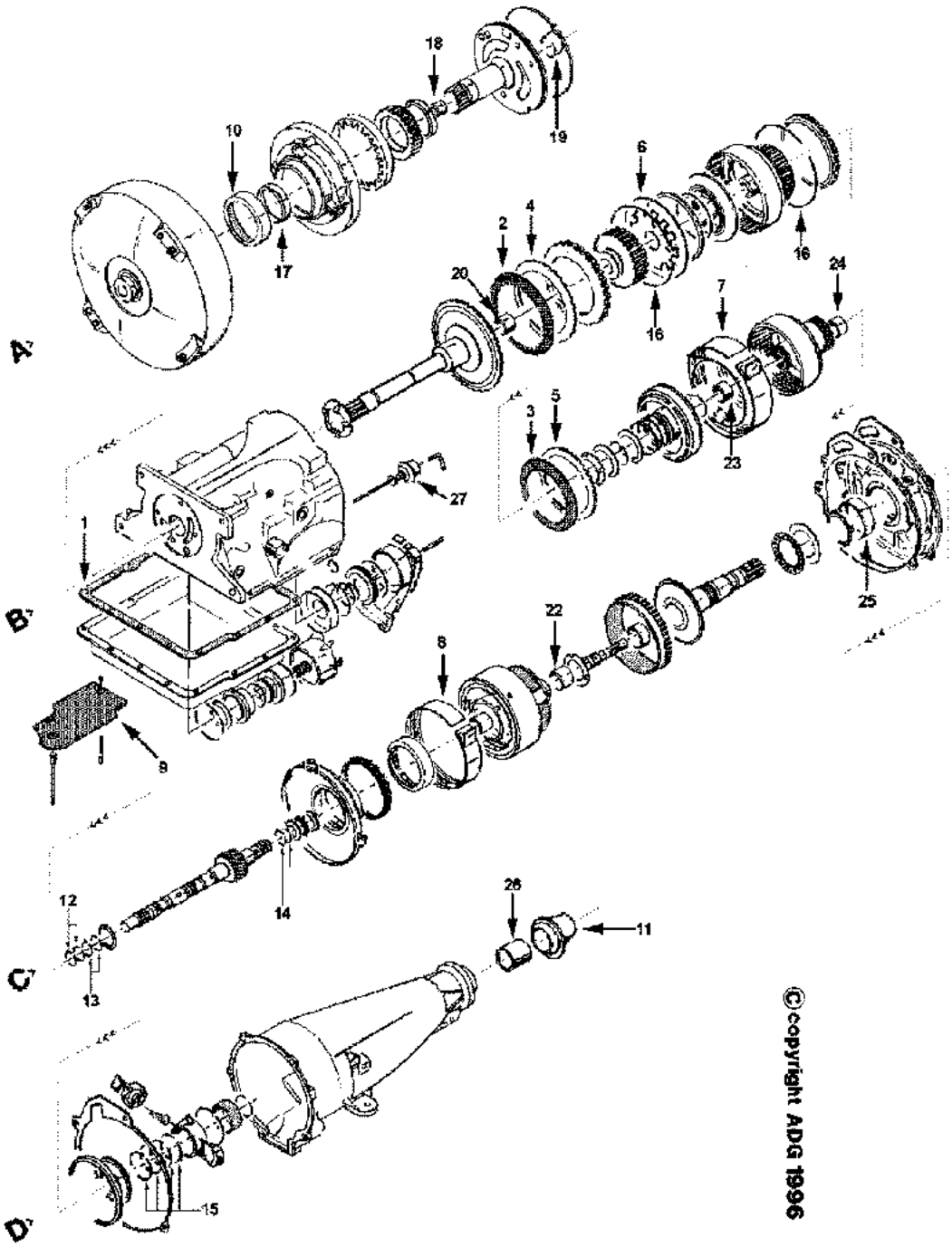

FORD
FMX
1968-81

KITS

*Add Suffix SK for Super Kit

ILL	Description	Years	Friction Module	Steel Module	Overhaul Kit	Banner Kit	Master Kit
KT	Rebuilding Kit	68-81	023752	023753	023800	023913LS	023913

MISCELLANEOUS GASKETS & KIT COMPONENTS

ILL	ALTO No.	REF No.	Description	Spec	Year	Qty	Notes
1B	023816	B5AZ-7A191B	Gasket, Oil pan		68-81	1	

FRICTION CLUTCHES

ILL	ALTO No.	REF No.	Description	Spec	Year	Qty	Notes
2B	049700	E0AZ-7B164A	Front	.061	68-81	5	Tan - 45T - OD: 5.250" - PL
2B	049700BR	6204A	Front	.060	68-81	5	Brz - 45T - OD: 5.250"- PL
3B	049702	E0AZ-7B164B	Rear	.080	68-81	4	Tan - 45T - OD: 5.250" - PL

FRICTION CLUTCHES - HI-PERFORMANCE - Red Eagle®

ILL	ALTO No.	REF No.	Description	Spec	Year	Qty	Notes
2B	049740	NA	Front	.061	68-81	5	Red - 45T - OD: 5.250" - SM
3B	049742	NA	Rear	.080	68-81	4	Red - 45T - OD: 5.250" - SM

FRICTION CLUTCHES - HI-PERFORMANCE - UNIT PACKS (ONE Rebuild)

ILL	ALTO No.	REF No.	Description	Spec	Year	Qty	Notes
KT	049740UP5	NA	Front	.061	68-81	1	5 Red Eagle® Frictions
KT	049742UP5	NA	Rear	.080	68-81	1	5 Red Eagle® Frictions

STEEL CLUTCHES

ILL	ALTO No.	REF No.	Description	Spec	Year	Qty	Notes
4B	023701	C8AZ-7B442A	Front	.068	68-81	3-4	54T - ID: 3.898"
5B	023701	C8AZ-7B442A	Rear	.068	68-81	4-5	54T - ID: 3.900"
6B	023767	C0AZ-7B070A	Front - Bellville	.073	68-81	1	8T - OD: 5.289" - SM

STEEL CLUTCHES - HI-PERFORMANCE - Kolene®

ILL	ALTO No.	REF No.	Description	Spec	Year	Qty	Notes
4B	023701K	NA	Front	.068	68-81	3-4	Kol - 54T - ID: 3.900"
5B	023701K	NA	Rear	.068	68-81	4-5	Kol - 54T - ID: 3.900"

STEEL CLUTCHES - HI-PERFORMANCE - UNIT PACKS (ONE Rebuild)

ILL	ALTO No.	REF No.	Description	Spec	Year	Qty	Notes
KT	023701KUP4	NA	UNIT PACK - Front or Rear	.068	68-81	1	4 Kolene® Steels

OEI® Original Equipment Improvements

ILL	ALTO No.	REF No.	Description	Spec	Year	Qty	Notes
KT	023987	SK® 3-67	Shift Kit®	Transgo®	68-72	1	
KT	023963	SK® 3-73	Shift Kit®	Transgo®	73-81	1	
KT	023991	37-1	Reprogramming Kit™	Transgo®	68-72	1	
KT	023991A	33-1	Reprogramming Kit™	Transgo®	73-81	1	

FILTERS

ILL	ALTO No.	REF No.	Description	Spec	Year	Qty	Notes
9B	023944	D0AZ-7A098A	Filter - Brass		68-81	1	
9B	023946	D8AZ-7A098A	Filter - Felt		68-81	1	

FORD
FMX
1968-81

METAL CLAD SEALS

ILL	ALTO No.	REF No.	Description	Spec	Year	Qty	Notes
10A	024400	C3AZ-7A248A	Front pump		68-81	1	
11D	031401	NA	Extension Housing without Boot		68-81	1	
11D	023405	D5AZ-7052A	Extension Housing with Boot		68-81	1	
N I	023406	D5AZ-7B498A	Manual Lever		68-81	1	

SEALING RINGS

ILL	ALTO No.	REF No.	Description	Spec	Year	Qty	Notes
KT	023603	B204	Sealing Ring Kit - 10M		68-81	1	
12C	027104	1P-77542A	Primary Sun gear - front	1.0625	68-81	1-2	
13C	028103	C0AZ-7C169A	Primary Sun Gear - intermediate	1.125	68-81	1-2	
14C	023104	1P - 77543B	Primary Sun Gear - Rear	.9375	68-81	1	
15D	027109	C6AZ-7D019A	Governor - oil distributor sleeve		68-81	3	

SNAP RINGS

ILL	ALTO No.	REF No.	Description	Spec	Year	Qty	Notes
KT	023681	NA	Snap Ring Kit		80-On	1	
16B	049250-062	C8AZ-7D483C	Front & Rear PP retainer - selective	.062	68-81	AR	
16B	049250-090	C8AZ-7D483B	Front & Rear PP retainer - selective	.090	68-81	AR	
16B	049250-104	C8AZ-7D483A	Front & Rear PP retainer - selective	.104	68-81	AR	

BUSHINGS

ILL	ALTO No.	REF No.	Description	Spec	Year	Qty	Notes
17A	023201	NA	Front Pump	Bronze	68-81	1	
17A	023206	C6AZ-7A162A	Front Pump	Babbit	68-81	1	
18A	023246	C8AZ-7B261A	Stator Support (pump cover)		68-81	1	
19A	023226	B5AZ-7025A	Case		68-81	1	
20B	023227	B1AZ-7120A	Input Shaft		68-81	1	
21C	023212	B1AZ-7B257B	Planet assembly - inner (1.00" x .875")		68-81	1	
22C	023215	B5AZ-7B256A	Planet assembly - outer (1.50" x .750")		68-81	1	
23B	023208	C8AZ-7D480A	Rear clutch brake drum (sun gear)		68-81	1	
24B	023210	B1AZ-7B262A	Rear clutch drum (rear)		68-81	1	
25C	023223	B5AZ-7B260A	Rear pump body		68-81	1	
26D	023225	B5AZ-7A034A	Extension Housing		68-81	1	

WASHERS

ILL	ALTO No.	REF No.	Description	Spec	Year	Qty	Notes
KT	023635	NA	Kit		68-81	1	

MODULATORS

ILL	ALTO No.	REF No.	Description	Spec	Year	Qty	Notes
27B	023505	C1AZ-7A377A	Modulator - Blue Stripe		68-81	1	
27B	023520	D3AZ-7A377A	Modulator - Black Stripe		73-76	1	
27B	023521	D3ZZ-7A377A	Modulator - Orange Stripe		73-74	1	
27B	023522	D5AZ-7A377C	Modulator - Green Stripe		75-81	1	

MISCELLANEOUS

ILL	ALTO No.	REF No.	Description	Spec	Year	Qty	Notes
N I	023301	C0AP-7B070A	Diaphragm Spring- front clutch		68-81	1	

CHRYSLER

A404, 413, 470, 670 1978-On
30TH, 31TH

A >

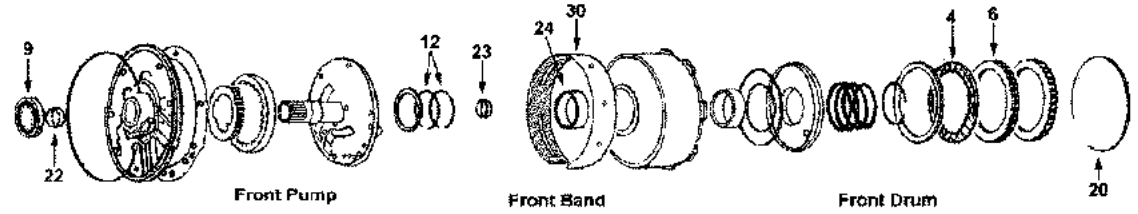

B >

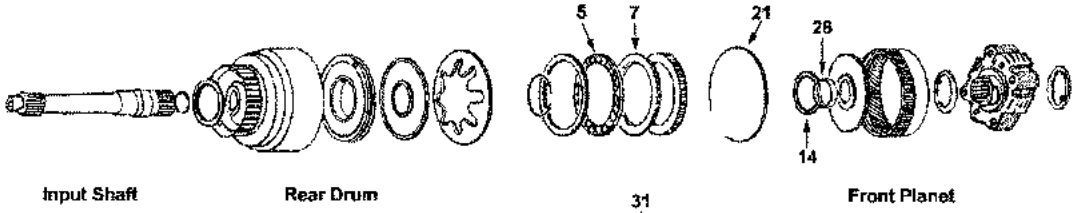

C >

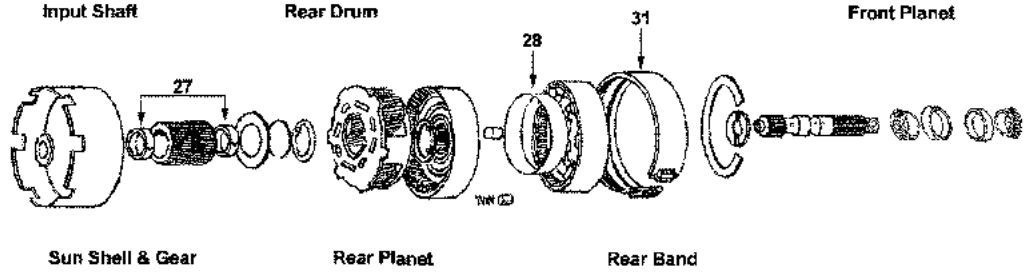

D >

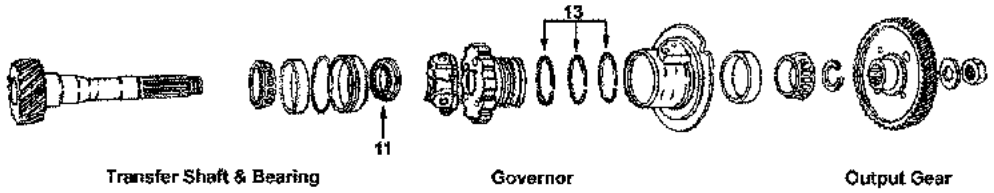

E >

F >

G >

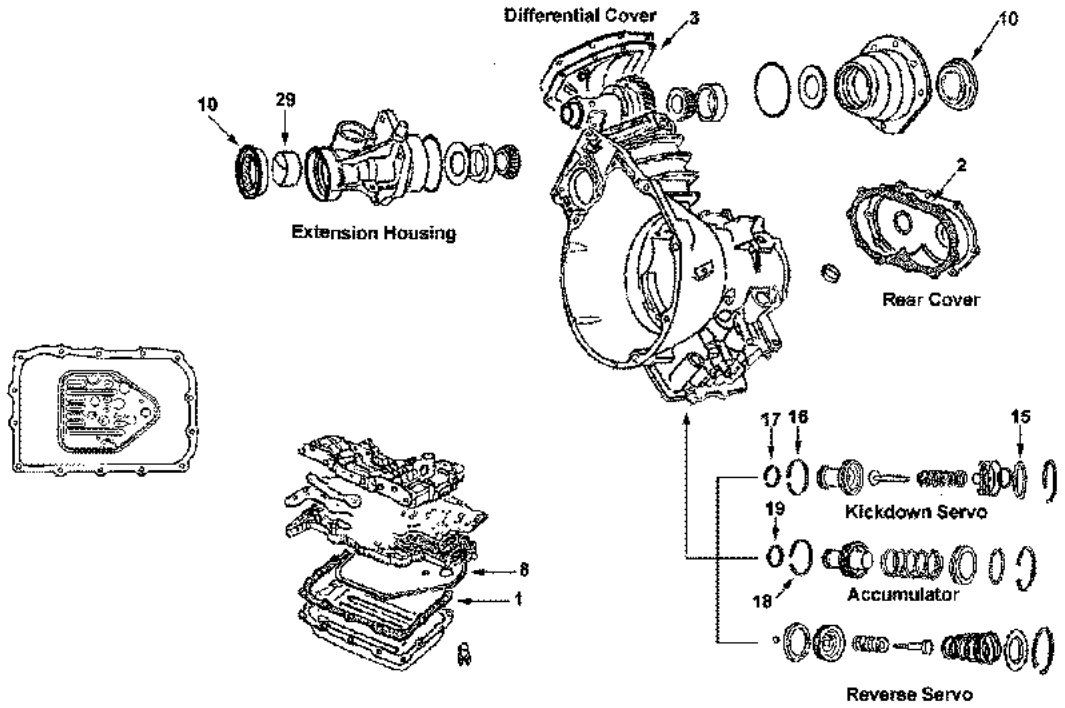

CHRYSLER

A404, 413, 470, 670 1978-On
30TH, 31TH

KITS

*Add Suffix SK for Super Kit

ILL	Description	Years	Friction Module	Steel Module	Overhaul Kit	Banner Kit	Master Kit
KT	Rebuilding Kit - A404 only	78-80	045752A	045753A	045800	045901LS	045901
KT	Rebuilding Kit - A413, A470, A670	81-On	045752	045753	045802T	045903LS	045903

KITS - HI-PERFORMANCE Red Eagle®

ILL	Description	Years	Friction and Steel Module	Overhaul Kit	Banner Kit	Master Kit
KT	Rebuilding Kit - A413, A470, A670	81-On	045750HP	045802HP	NA	045903HP

KITS - HI-PERFORMANCE with PowerPack®

ILL	Description	Years	Friction and Steel Module	Overhaul Kit	Banner Kit	Master Kit
KT	Rebuilding Kit - A413, A470, A670 with Reverse	81-On	045750HPPWR	045802HP	NA	045903HPPWR

MISCELLANEOUS GASKETS & KIT COMPONENTS

ILL	ALTO No.	REF No.	Description	Spec	Year	Qty	Notes
1G	045816	5224052	Gasket, Oil Pan	Cork/Rub	78-On	1	
2F	045818	5222142	Gasket, End (rear) cover	Cork/Rub	78-On	1	
3E	045820	5212276	Gasket, Differential (side) cover	Cork/Rub	78-On	1	

FRICTION CLUTCHES

ILL	ALTO No.	REF No.	Description	Spec	Year	Qty	Notes
4A	045700	5205675	Front	.083	78-On	2-4	HEG - 47T - OD: 4.887" - PL
5B	045702	5222185	Rear	.071	78-80	2	Tan - 47T - OD: 4.887" - PL
5B	045704	5224084	Rear	.071	81-On	2-4	HEG - 49T - OD: 4.898" - SM

FRICTION CLUTCHES - HI-PERFORMANCE - Red Eagle®

ILL	ALTO No.	REF No.	Description	Spec	Year	Qty	Notes
N I	045740-210	NA	Front	.083	78-On	2-4	Red - 47T - OD: 4.887" - PLI
N I	045744-180	NA	Rear	.071	81-On	2-4	Red - 49T - OD: 4.898" - SM

STEEL CLUTCHES

ILL	ALTO No.	REF No.	Description	Spec	Year	Qty	Notes
6A	045701	5205677	Front	.065	78-80	4	8T - ID: 4.100"
6A	045703	4659379	Front	.101	81-On	3-4	8T - ID: 4.100"
7B	045701	5205677	Rear	.065	78-80	1	8T - ID: 4.100"
7B	045705	5224073	Rear	.068	81-On	2-3	8T - ID: 4.255"

STEEL CLUTCHES - HI-PERFORMANCE - Kolene®

ILL	ALTO No.	REF No.	Description	Spec	Year	Qty	Notes
6A	045703K	NA	Front	.101	81-On	3-4	Kol - 8T - 4.100"
7B	045705K	NA	Rear	.068	81-On	2-3	Kol - 8T - 4.255"

PRESSURE PLATES

ILL	ALTO No.	REF No.	Description	Spec	Year	Qty	Notes
N I	045701-520	4207209	Front	.204	81-86	1	8T - 4.100"
N I	045701-470	4348888	Front	.185	87-On	1	8T - 4.100"
N I	045760A500	4269619	Forward Top	.197	78-On	1	8T - 4.253"

CHRYSLER

A404, 413, 470, 670 1978-On

30TH, 31TH

OEI® Original Equipment Improvements

ILL	ALTO No.	REF No.	Description	Spec	Year	Qty	Notes
KT	045755	NA	Forward PowerPack®		81-On	1	

BANDS

ILL	ALTO No.	REF No.	Description	Spec	Year	Qty	Notes
30A	045950	5212312	Kickdown (Front)	Tan	78-On	1	
31C	045951	5205765	Reverse (Rear)	Tan	78-On	1	

BANDS - HI-PERFORMANCE - Red Eagle® or Carbonite®

ILL	ALTO No.	REF No.	Description	Spec	Year	Qty	Notes
30A	045960	4659732	Kickdown (Front)	Red	78-On	1	Red Eagle®

FILTERS

ILL	ALTO No.	REF No.	Description	Spec	Year	Qty	Notes
8G	045940	4207219	Filter - A404 only		78-80	1	
8G	045942	4269649	Filter - A413, 470, 670		81-On	1	

METAL CLAD SEALS

ILL	ALTO No.	REF No.	Description	Spec	Year	Qty	Notes
9A	027400	4412475	Front Pump	Silicone	78-97	1	
9A	027400A	4269057	Front Pump	Vamac®	98-On	1	
10E	045401	4641263	Axle		78-On	2	
11D	045403	5222015	Transfer Shaft		78-81	1	
N I	027406	4505098	Manual Lever		78-On	1	

SEALING RINGS

ILL	ALTO No.	REF No.	Description	Spec	Year	Qty	Notes
KT	045601	A118	Sealing Ring Kit - 12M / 3T		78-On	1	
KT	045601T	A120B	Sealing Ring Kit - 13T / 2M		78-On	1	
12A	045100	5212305	Stator Support - Reaction shaft		78-On	2	
N I	027104	1401221	Input Shaft	Metal	78-85	1	
N I	045113	4377047	Input Shaft	Teflon	86-On	2-3	
13D	045107	5212092	Governor Support		78-On	3	
14B	045102	5205697	Rear Clutch retainer		78-On	1	
15G	045104	5212049	Kickdown Servo Guide	1.898	78-80	1	
16G	045104	5212049	Kickdown Servo Piston - Release	1.898	78-80	1	
16G	027108	1636470	Kickdown Servo Piston - Release	2.125	81-On	1	
17G	027107	1824541	Kickdown Servo Piston - Apply	1.250	78-80	1	
17G	018102	3410374	Kickdown Servo Piston - Apply	1.000	81-On	1	
18G	018101	3743013	Accumulator Piston - Release	2.000	78-On	1	
19G	027101	1401221	Accumulator Piston - Apply	1.063	78-On	1	

CHRYSLER

A404, 413, 470, 670 1978-On
30TH, 31TH

SNAP RINGS

ILL	ALTO No.	REF No.	Description	Spec	Year	Qty	Notes
20A	027260W043	2466283	Forward Clutch - wave	.043	78-81	1	
21B	027260-048	4269670	Forward Clutch - Selective	.048	78-On	AR	
21B	027260-060	1942421	Forward Clutch - Selective	.060	78-On	AR	
21B	027260-076	1942423	Forward Clutch - Selective	.076	78-On	AR	
21B	027260-087	4130775	Forward Clutch - Selective	.087	78-On	AR	

BUSHINGS

ILL	ALTO No.	REF No.	Description	Spec	Year	Qty	Notes
KT	045625A	NA	Kit		82-On	1	
22A	027202	2466796	Front Pump Housing	Bronze	78-On	1	
22A	027202A	1853585	Front Pump Housing	Babbit	78-On	opt.	
23A	027208	2801728	Reaction Shaft		78-11/85	1	
23A	027211	4058635	Reaction Shaft		11/86-On	1	
24A	045202	5222405	Front Clutch Retainer - Front (large)		78-On	1	
25A	045203	5222406	Front Clutch Retainer - Rear (Small)		78-On	1	
26B	045204	5205728	Annulus Gear		78-On	1	
27C	045205	5205735	Sun Gear		78-On	2	
28C	045206	5222137	Low / Reverse Drum		78-On	1	
29E	045207	5212223	Extension Housing Axle		78-On	1	

WASHERS

ILL	ALTO No.	REF No.	Description	Spec	Year	Qty	Notes
KT	045635A	NA	Kit		78-80	1	
KT	045635	NA	Kit		81-On	1	

ELECTRONIC CONTROL COMPONENTS

ILL	ALTO No.	REF No.	Description	Spec	Year	Qty	Notes
N I	045502	4799954AA	Solenoid TCC L/U		87-On	1	

CHRYSLER

A500 (40RH, 42RH, 42RE, 44RE)

1989-On

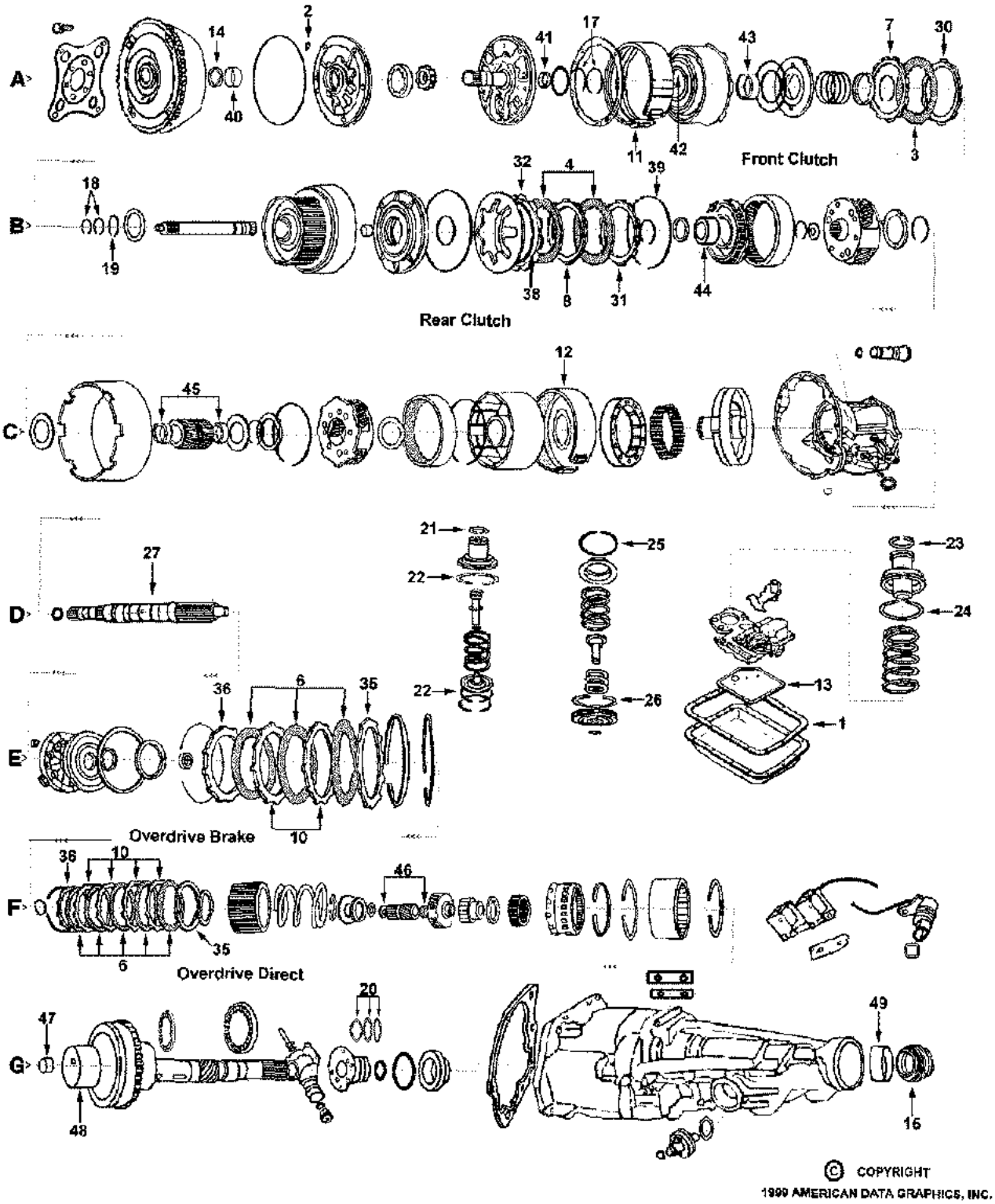

CHRYSLER

A500 (40RH, 42RH, 42RE, 44RE)

1989-On

KITS

*Add Suffix SK for Super Kit

ILL	Description	Years	Friction Module	Steel Module	Overhaul Kit	Banner Kit	Master Kit
KT	Rebuilding Kit - 40RH only	89-On	027752A	027753A	027804	027905LS	027905
KT	Rebuilding Kit - All	89-On	027752B	027753B	027804	027905ALS	027905A

KITS - HI-PERFORMANCE Red Eagle®

ILL	Description	Years	Friction Module	Steel Module	Overhaul Kit	Banner Kit	Master Kit
KT	Rebuilding Kit - 40RH only	89-On	027752AHP	027753AHP	027804	027905HPLS	027905HP
KT	Rebuilding Kit - All	89-On	027752BHP	027753BHP	027804	027905AHPLS	027905AHP

KITS - OVERDRIVE (only) REPAIR

ILL	Description	Years	Friction and Steel Module	Overhaul Kit	Banner Kit	Master Kit
KT	OVERDRIVE (only) Repair Kits	89-On	027758A	027835	NA	NA
KT	OVERDRIVE (only) Repair Kits - Red Eagle® clutches	89-On	027758AHP	027835	NA	NA

MISCELLANEOUS GASKETS & KIT COMPONENTS

ILL	ALTO No.	REF No.	Description	Spec	Year	Qty	Notes
1E	027816	4295875	Gasket, Oil pan	Cork/Rub	89-On	1	
2A	032003	6023943	Washer, Front Pump bolts		89-On	8	

FRICTION CLUTCHES

ILL	ALTO No.	REF No.	Description	Spec	Year	Qty	Notes
3A	027700	2400625	Front	.086	89-On	3-4	Tan - 45T - OD: 4.940" - PL
3A	027712	NA	Front	.086	89-On	3-4	HEG - 45T - OD: 4.940" - PL
4B	027706PL	4713880	Rear - Parallel Lines	.061	89-On	3-4	Tan - 45T - OD: 4.940" - PL
4B	027706	4531068	Rear - Smooth	.061	89-On	Opt.	Tan - 45T - OD: 4.940" - SM
4B	027710	NA	Rear - Smooth	.061	89-On	Opt.	HEG - 45T - OD: 4.940" - SM
5F	027720	05143636AA	Overdrive Direct	.063	89-On	6-8	HEG - 54T - OD: 5.475" - SM
6E	027722	4462153	Overdrive Brake- flat	.087	89-95	2-4	HEG - 54T - OD: 6.077" - SM
6E	027722A	4461181	Overdrive Brake - wave	.087	96-On	3-5	HEG - 54T - OD: 6.077" - SM

FRICTION CLUTCHES - HI-PERFORMANCE - Red Eagle®

ILL	ALTO No.	REF No.	Description	Spec	Year	Qty	Notes
3A	027740	NA	Front	.086	89-On	3-4	Red - 45T - OD: 4.937" - SM
3A	027740PL	NA	Front	.086	89-On	3-4	Red - 45T - OD: 4.937" - PL
4B	027742	NA	Rear - Smooth	.061	89-On	3-4	Red - 45T - OD: 4.940" - SM
5F	027744	NA	Overdrive Direct	.063	89-On	6-8	Red - 54T - OD: 5.475" - SM
6E	027746	NA	Overdrive Brake	.087	89-On	2-5	Red - 54T - OD: 6.077" - SM

FRICTION CLUTCHES - HI-PERFORMANCE - UNIT PACKS (ONE Rebuild)

ILL	ALTO No.	REF No.	Description	Spec	Year	Qty	Notes
KT	027740UP4	NA	UNIT PACK - Front	.086	89-On	1	4 Red Eagle® Frictions
KT	027742UP4	NA	UNIT PACK - Rear	.061	89-On	1	4 Red Eagle® Frictions
KT	027744UP8	NA	UNIT PACK - Overdrive Direct	.063	89-On	1	8 Red Eagle® Frictions
KT	027746UP5	NA	UNIT PACK - Overdrive Brake	.087	89-On	1	5 Red Eagle® Frictions

STEEL CLUTCHES

ILL	ALTO No.	REF No.	Description	Spec	Year	Qty	Notes
7A	027701	4617325	Front	.068	89-On	4	12T - ID: 3.950"
8B	027701	4617325	Rear	.068	89-On	3-4	12T - ID: 3.950"
8B	027717	NA	Front & Rear - selective	.085	89-On	AR	12T - ID: 3.950"
9F	027721	4461054	Overdrive Direct	.069	89-On	5-7	12T - ID: 4.685"

CHRYSLER

A500 (40RH, 42RH, 42RE, 44RE)

1989-On

STEEL CLUTCHES

10E	027723	4461047	Overdrive Brake	.068	89-On	1-3	12T - ID: 5.024"

STEEL CLUTCHES - HI-PERFORMANCE - Kolene®

ILL	ALTO No.	REF No.	Description	Spec	Year	Qty	Notes
7A	027701K	NA	Front & Rear	.068	89-On	4	Kol - 12T - ID: 3.950"
7A	027701K200	NA	Front & Rear - Selective	.079	89-On	AR	Kol - 12T - ID: 3.950"
8B	027717K216	NA	Front & Rear - selective	.085	89-On	AR	Kol - 12T - ID: 3.950"
9F	027721K	NA	Overdrive Direct	.069	89-On	5-7	Kol - 12T - ID: 4.685"
10E	027723K	NA	Overdrive Brake	.068	89-On	1-3	Kol - 12T - ID: 5.024"

STEEL CLUTCHES - HI-PERFORMANCE - UNIT PACKS (ONE Rebuild)

ILL	ALTO No.	REF No.	Description	Spec	Year	Qty	Notes
KT	027701KUP4	NA	UNIT PACK - Front or Rear	.068	89-On	1	4 Kolene® Steels

SPRINGS - WAVE, BELLEVILLE, FINGER

ILL	ALTO No.	REF No.	Description	Spec	Year	Qty	Notes
NA	027763X	NA	Overdrive Brake - wave		89-On	1	Cushion Spring

PRESSURE PLATES

ILL	ALTO No.	REF No.	Description	Spec	Year	Qty	Notes
30A	027760A548	4617176AB	Front Clutch - flat	.216	89-On	1	
31B	027760A548	4617176AB	Rear Clutch - flat	.216	89-On	1	
32B	027760B300	2466281	Rear Clutch - backing (bevel)	.118	89-On	1	
33F	027762-550	4461030	Overdrive Direct - top	.216	89-On	1	
34F	027762A550	4461031	Overdrive Direct - bottom	.216	89-On	1	
35E	027762J790	4461081	Overdrive Brake - top	.312	89-On	1	Not Available
36E	027763-540	4461033	Overdrive Brake - bottom	.215	89-95	1	
35E	027763-956	4461048	Overdrive Brake - top & bottom	.376	89-On	1	12T - ID: 5.024"

OEI® Original Equipment Improvements

ILL	ALTO No.	REF No.	Description	Spec	Year	Qty	Notes
KT	028985C	SK® TFOD-JR	Shift Kit®	Transgo®	89-On	1	
KT	028985B	TFOD-Diesel	Shift Kit®	Transgo®	89-On	1	
KT	028992	TFOD-HD2	Reprogramming Kit™ - Tow & Go	Transgo®	89-On	1	
KT	028992A	TFOD-3	Reprogramming Kit™ - Competition	Transgo®	89-On	1	Full "stick" shift

SHAFTS

ILL	ALTO No.	REF No.	Description	Spec	Year	Qty	Notes
27D	027381	4431913	Intermediate Shaft - OE Style		88-89	1	
27D	027381PS	4431913X	Intermediate Shaft - Modified		88-89	1	
27D	027381A	4617604	Intermediate Shaft - OE Style		90-On	1	
27D	027381APS	4617604X	Intermediate Shaft - Modified		90-On	1	

BANDS

ILL	ALTO No.	REF No.	Description	Spec	Year	Qty	Notes
11A	027954AR	4617849	Front (Intermediate) - Flex (1.600" wide)	Tan	89-On	1	
12C	027953	4431406	Rear (Reverse) - Split (2.000" wide)	Tan	89-On	1	

FILTERS

ILL	ALTO No.	REF No.	Description	Spec	Year	Qty	Notes
13E	028944	3515996	Filter - Large Felt		89-98	1	

CHRYSLER

A500 (40RH, 42RH, 42RE, 44RE)

1989-On

FILTERS

13E	028948	52118789	Filter - Metal & Plastic		99-On	1	

METAL CLAD SEALS

ILL	ALTO No.	REF No.	Description	Spec	Year	Qty	Notes
14A	027400	4412475	Front Pump with Flange	Silicone	89-97	1	
14A	027400A	4269057	Front Pump with Flange	Vamac®	98-On	1	Does retro-fit
15G	031401	3515383	Extension Housing without boot		89-On	1	
15G	023405	4531216	Extension Housing with boot		89-On	1	
15G	028402	4269956	Adapter Housing (4 x 4)		89-On	1	
16C	027406	4505098	Manual Control Lever		89-On	1	

SEALING RINGS

ILL	ALTO No.	REF No.	Description	Spec	Year	Qty	Notes
KT	027602A	A135A	Sealing Ring Kit - 6M / 9T		89-On	1	with SSP stator rings
17A	027103	1942389	Front Pump Stator (reaction shaft)		89-On	2	
17A	027103A	4471874	Front Pump Stator (reaction shaft)		89-On	2	seal-plated (SSP)
18B	027104	1401221	Input Shaft (small)	Metal	89-On	2	
18B	027114	4269592	Input Shaft (small)	Teflon	89-On	2	
19B	027110	4028333	Input Shaft (large) - Rear clutch retainer		89-On	1	
20G	027112	4461011	Governor support		89-On	3	
21D	027105	3410374	Kickdown Servo - apply (small)	Metal	89-On	1	
21D	027115	3743033	Kickdown Servo - apply (small)	Teflon	89-On	1	
21D	027107	M4295965	Kickdown Servo - apply (small)	Metal	90-On	1	Mitsubishi-not in kits
22D	027106	3410372	Kickdown Servo - release (large)	Metal	89-On	2	
22D	027116	4295966	Kickdown Servo - release (large)	Teflon	89-On	2	
22D	027108	M3743014	Kickdown Servo - release (large)	Metal	90-On	2	Mitsubishi-not in kits
23D	027120	4431959	3-4 Accumulator - apply (small)	Teflon	89-On	1	
24D	027121	4431958	3-4 Accumulator - release (large)	Teflon	89-On	1	
25D	027122	3743010	Accumulator - apply (small)	Teflon	89-On	1	
26D	027123	3743013	Accumulator - release (large)	Teflon	89-On	1	

SNAP RINGS

ILL	ALTO No.	REF No.	Description	Spec	Year	Qty	Notes
38B	027260W043	2466283	Forward Clutch PP retainer - inner		89-On	1	
39B	027260-060	4130761	Forward Clutch PP retainer - outer / selective	.060"	89-On	AR	
39B	027260-076	4539121	Forward Clutch PP retainer - outer / selective	.076	89-On	AR	
39B	027260-098	4539122	Forward Clutch PP retainer - outer / selective	.098	89-On	AR	
N I	028253W	4461032	Overdrive Direct		89-On	AR	

BUSHINGS

ILL	ALTO No.	REF No.	Description	Spec	Year	Qty	Notes
KT	027630	NA	Kit		89-On	1	
40A	027202	2466796	Front Pump housing	Bronze	89-On	1	
40A	027202A	2204953	Front Pump housing	Babbit	89-On	1	
41A	027211	4058635	Reaction Shaft		89-On	1	
42A	027206	2801727	Front Clutch drum - rear	2.056	89-93	1	
42A	027206A	4617159	Front Clutch drum - rear	2.06	94-On	1	
43A	027214	4617157	Front Clutch drum - front	2.20	94-On	1	
44B	027212	3681967	Annulus gear support - front		89-On	1	
45C	027207	1942436	Reverse Sun Gear		89-On	2	
46F	027215	4461025	Overdrive Sun Gear		89-96	1	
46F	027215A	NA	Overdrive Sun Gear with Flange		97-On	1	

CHRYSLER

A500 (40RH, 42RH, 42RE, 44RE)

1989-On

BUSHINGS

ILL	ALTO No.	REF No.	Description	Spec	Year	Qty	Notes
47G	027216	4461007	Output Shaft - pilot		89-On	1	
48G	027217	4461006	Output Shaft - inner		89-On	1	
49G	023225	2801724	Extension Housing	1.81	89-On	1	
49G	027210	2801726	Extension Housing	1.69	89-On	1	

WASHERS

ILL	ALTO No.	REF No.	Description	Spec	Year	Qty	Notes
KT	027635A	NA	Washer Kit		89-On	1	
28F	028161-467	4431587	Shim - Overdrive Clutch selective	.184	89-On	1	
28F	028161-505	4431733	Shim - Overdrive Clutch selective	.199	89-On	1	
28F	028161-544	4431588	Shim - Overdrive Clutch selective	.214	89-On	1	

ELECTRONIC CONTROL COMPONENTS

ILL	ALTO No.	REF No.	Description	Spec	Year	Qty	Notes
N I	027501	56027562	Sensor, Governor (3 pin)		93-96	1	
N I	027503	4431954	Solenoid OD, TC L/U (on-off)		88-On	1	
N I	027504	52118500	Solenoid OD L/U 4 Prog		00-On	1	
N I	027505	4617210 50185	Solenoid Governor Pressure 42RE		94-On	1	
N I	077509	4800879	Sensor Output 42RE, 44RE		94-On	1	

CHRYSLER

A518 (46RE, 46RH) 1990-02
A618 (47RE, 47RH) 1994-02, A618 (48RE) 2003-On

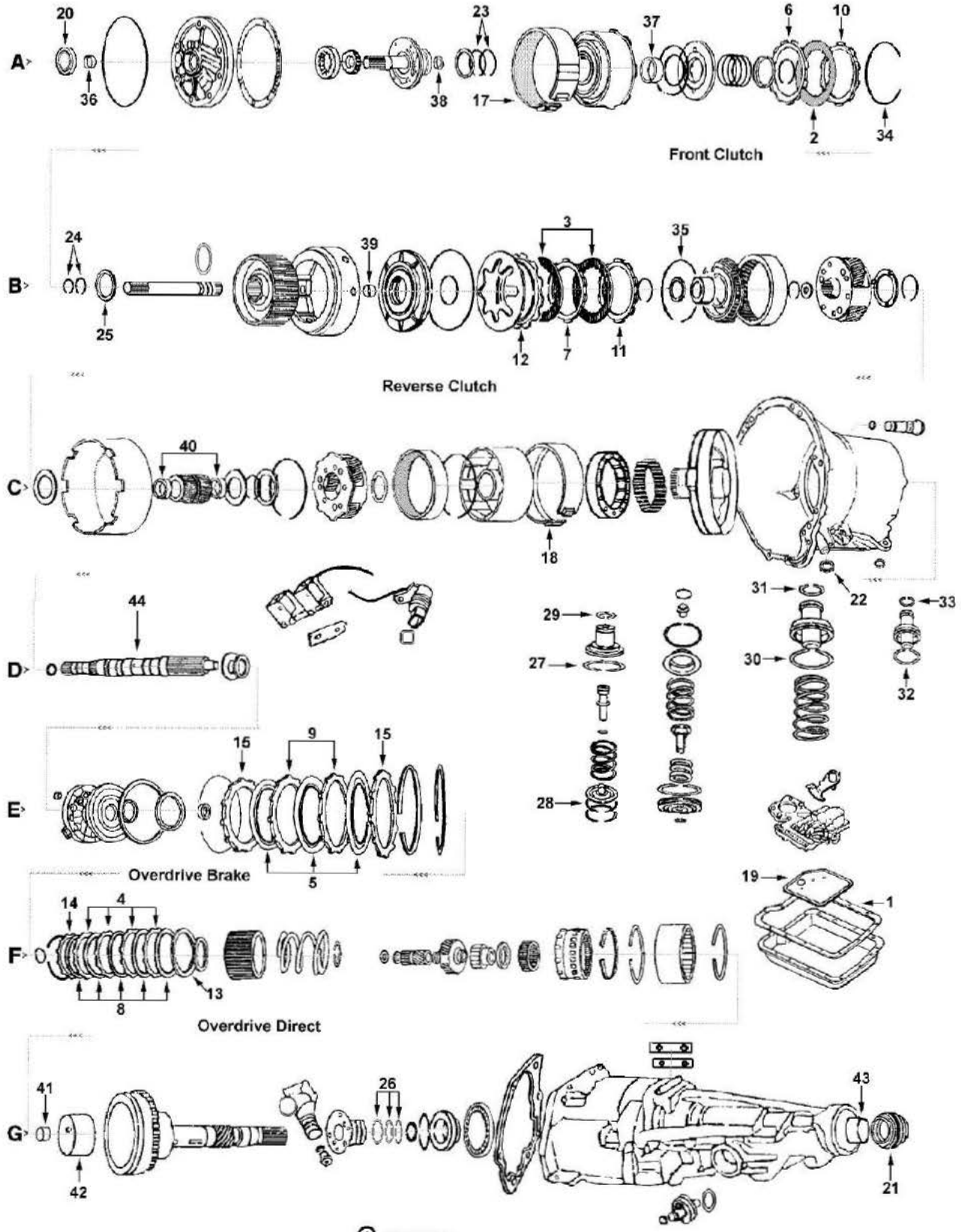

© COPYRIGHT
1999 AMERICAN DATA GRAPHICS, INC.

CHRYSLER

A518 (46RE, 46RH) 1990-02
A618 (47RE, 47RH) 1994-02, A618 (48RE) 2003-On

KITS

*Add Suffix SK for Super Kit

ILL	Description	Years	Friction Module	Steel Module	Overhaul Kit	Banner Kit	Master Kit
KT	Rebuilding Kit - A518	90-93	028752A	028753A	028806	028905LS	028905
KT	Rebuilding Kit - A518/A618	94-97	028752B	028753B	028806	028907BLS	028907B
KT	Rebuilding Kit - A518/A618	98-02	028752D	028753D	028806	028907CLS	028907C
KT	Rebuilding Kit - A618/48RE	03-On	028752F	028753F	028808	028907FLS	028907F

KITS - HI-PERFORMANCE Red Eagle®

ILL	Description	Years	Friction Module	Steel Module	Overhaul Kit	Banner Kit	Master Kit
KT	Rebuilding Kit - A518	90-93	028752BHP	028753BHP	028806	028907BHPLS	028907BHP
KT	Rebuilding Kit - A518/A618	98-02	028752DHP	028753DHP	028806	028907CHPLS	028907CHP
KT	Rebuilding Kit - A518/A618 Combo	94-02	028752EHP	028753EHP	028806	028907EHPLS	028907EHP
KT	Rebuilding Kit - A618/48RE	03-On	028752FHP	028753FHP	028808	028907FHPLS	028907FHP

KITS - HI-PERFORMANCE with PowerPack®

ILL	Description	Years	Friction and Steel Module	Overhaul Kit	Banner Kit	Master Kit
KT	Rebuilding Kit - A518, A618 w/Front PowerPack®	94-02	028750EHPPWR	028806	NA	028907EHPPWR
KT	Rebuilding Kit - A518, A618 w/Front, Rear & Overdrive PowerPack®	90-02	028750XHPPWR	028806	NA	028907XHPPWR
KT	Rebuilding Kit - A618/48RE w/Front, Rear & Overdrive PowerPack®	03-On	028750FHPPWR	028808	NA	028907FHPPWR

KITS - OVERDRIVE (only) REPAIR

ILL	Description	Years	Friction and Steel Module	Overhaul Kit	Banner Kit	Master Kit
KT	OVERDRIVE (only) Repair Kits	90-02	028758	027835	NA	NA
KT	OVERDRIVE (only) Repair Kits - Red Eagle® Clutches	90-02	028758HP	027835	NA	NA

MISCELLANEOUS GASKETS & KIT COMPONENTS

ILL	ALTO No.	REF No.	Description	Spec	Year	Qty	Notes
1F	028816	2464324	Gasket, Oil Pan	Cork/Rub	90-On	1	
N I	032003	6023943	Washer, Front Pump bolt		90-On	8	

FRICTION CLUTCHES

ILL	ALTO No.	REF No.	Description	Spec	Year	Qty	Notes
2A	028718	4617202	Front - A518	.095/2.41	90-97	3-4	HEG - 62T - OD: 6.700" - WF
2A	028714	4617201AB	Front - All	.085/2.16	98-On	3-5	HEG - 62T - OD: 6.700" - PL
3B	028716	NA	Rear	.061/1.55	90-On	opt.	HEG - 62T - OD: 6.700" - SM
3B	028710	NA	Rear	.061/1.55	90-On	4	Tan - 62T - OD: 6.700" - PL
3B	028710A155	NA	Rear	.061/1.55	90-On	4	Tan - 62T - OD: 6.700" - PL
3B	028708-160	52854030AA	Rear - 48RE	.063/1.60	03-On	4	HEG - 93T - OD: 6.700" - 8PL
4F	027720	05143636AA	Overdrive Direct	.063/1.60	90-On	6-8	HEG - 54T - OD: 5.475" - SM
4F	027720B120	05093167AA	Overdrive Direct (1 sided) - internal spline 48RE	.047/1.19	03-On	12	Tan - 54T - OD: 5.475" - 8PL
4F	027721B120	05093168AA	Overdrive Direct (1 sided) - external spline 48RE	.047/1.19	03-On	11	Tan - 12T - ID: 4.685" - 8PL
5E	027722	4462153	Overdrive Brake- flat	.087/2.21	90-95	2-5	HEG - 54T - OD: 6.077" - SM
5E	027722A	4461181	Overdrive Brake - wave	.087/2.21	96-On	3-5	HEG - 54T - OD: 6.077" - SM
5E	027722	4462153	Overdrive Brake - flat 48RE	.087/2.21	03-On	6	HEG - 54T - OD: 6.077" - SM

FRICTION CLUTCHES - HI-PERFORMANCE - Red Eagle® or Carbonite®

ILL	ALTO No.	REF No.	Description	Spec	Year	Qty	Notes
2A	028740	NA	Front - All	.095/2.41	90-97	3-4	Red - 62T - OD: 6.700" - SM
2A	028740PL	NA	Front - All	.095/2.41	90-97	3-4	Red - 62T - OD: 6.700" - PL
2A	028740A	NA	Front - All	.085/2.16	98-On	3-4	Red - 62T - OD: 6.700" - SM
2A	028740APL	NA	Front - All	.085/2.16	98-On	3-4	Red - 62T - OD: 6.700" - PL

CHRYSLER

A518 (46RE, 46RH) 1990-02
A618 (47RE, 47RH) 1994-02, A618 (48RE) 2003-On

FRICTION CLUTCHES - HI-PERFORMANCE - Red Eagle® or Carbonite®

ILL	ALTO No.	REF No.	Description	Spec	Year	Qty	Notes
3B	028742	NA	Rear - smooth	.061/1.54	90-On	4	Red - 62T - OD: 6.700" - SM
3B	028742A155	NA	Rear - grooved	.061/1.54	90-On	4	Red - 62T - OD: 6.700" - PL
3B	028710C155	NA	Rear	.061/1.54	90-On	4	Crb - 62T - OD: 6.700" - PLNI
3B	028748-160	NA	Rear - 48RE	.063/1.60	03-On	4	Red - 93T - OD: 6.700" - PL
4F	027744	NA	Overdrive Direct	.063/1.60	90-On	8-9	Red - 54T - OD: 5.475" - SM
5E	027746	NA	Overdrive Brake	.087/2.21	90-On	2-5	Red - 54T - OD: 6.077" - SM
5E	027746-165	NA	Overdrive Brake	.065/1.65	88-On	7	Red - 54T - OD: 6.077" - SM
5E	027722B165	NA	Overdrive Brake	.065/1.65	88-On	7	G3C - 54T - OD: 6.077" - PPL

FRICTION CLUTCHES - HI-PERFORMANCE - UNIT PACKS (ONE Rebuild)

ILL	ALTO No.	REF No.	Description	Spec	Year	Qty	Notes
KT	028740UP4	NA	UNIT PACK - Front	.095/2.41	90-97	1	4 Red Eagle® Frictions
KT	028742UP4	NA	UNIT PACK - Rear	.061/1.54	90-On	1	4 Red Eagle® Frictions
KT	027744UP8	NA	UNIT PACK - Overdrive Direct	.063/1.60	90-On	1	8 Red Eagle® Frictions
KT	027746UP5	NA	UNIT PACK - Overdrive Brake	.087/2.21	90-On	1	5 Red Eagle® Frictions

STEEL CLUTCHES

ILL	ALTO No.	REF No.	Description	Spec	Year	Qty	Notes
6A	028701	52118812AB	Front	.068/1.73	90-97	4	12T - ID: 5.342"
6A	028701-216	2124826AB	Front	.085/2.16	98-On	4	12T - ID: 5.342"
6A	028701	52118812AB	Front - 48RE	.068/1.73	03-On	4	12T - ID: 5.342"
7B	028701	52118812AB	Rear	.068/1.73	90-97	3-4	12T - ID: 5.342"
7B	028701-216	2124826AB	Rear	.085/2.16	98-On	3-4	12T - ID: 5.342"
7B	028701	52118812AB	Rear - 48RE	.068/1.73	03-On	3	12T - ID: 5.342"
6A	028701-200	NA	Front & Rear - selective	.079/2.01	90-On	AR	12T - ID: 5.342"
6A	028701-122	NA	Front & Rear - selective	.048/1.22	98-On	AR	12T - ID: 5.342"
6A	028707	2124826OS	Front & Rear - oversized	.090/2.29	90-On	AR	12T - ID: 5.342"
8F	027721	4461054	Overdrive Direct except A618 1998-On	.069/1.75	90-97	7-8	12T - ID: 4.685"
8F	027721A	4864053	Overdrive Direct - A618	.053/1.35	98-On	9	12T - ID: 4.685"
9E	027723	4461047	Overdrive Brake	.068/1.73	90-On	3-6	12T - ID: 5.024"

STEEL CLUTCHES - HI-PERFORMANCE - Kolene®

ILL	ALTO No.	REF No.	Description	Spec	Year	Qty	Notes
6A	028701K	NA	Front & Rear	.068/1.73	90-97	AR	Kol - 12T - ID: 5.342"
6A	028701K150	NA	Front & Rear	.059/1.50	06-On	4	Kol - 12T - ID: 5.342"
6A	028701K216	NA	Front & Rear	.085/2.16	98-On	AR	Kol - 12T - ID: 5.342"
6A	028701K200	NA	Front & Rear - selective	.079/2.01	90-On	AR	Kol - 12T - ID: 5.342"
8F	027721K	NA	Overdrive Direct	.069/1.75	90-On	7-8	Kol - 12T - ID: 4.685"
8F	027721AK137	NA	Overdrive Direct - A618	.053/1.35	98-On	9	Kol - 12T - ID: 4.685"
9E	027723K	NA	Overdrive Brake	.068/1.73	90-On	3-4	Kol - 12T - ID: 5.024"

STEEL CLUTCHES - HI-PERFORMANCE - UNIT PACKS (ONE Rebuild)

ILL	ALTO No.	REF No.	Description	Spec	Year	Qty	Notes
KT	028701KUP4	NA	Front or Rear	.068/1.73	90-97	1	4 Kolene® Steels

SPRINGS - WAVE, BELLEVILLE, FINGER

ILL	ALTO No.	REF No.	Description	Spec	Year	Qty	Notes
NA	027763X	NA	Overdrive Brake - wave		90-On	1	Cushion Spring

CHRYSLER

A518 (46RE, 46RH) 1990-02
A618 (47RE, 47RH) 1994-02, A618 (48RE) 2003-On

PRESSURE PLATES

ILL	ALTO No.	REF No.	Description	Spec	Year	Qty	Notes
10A	TBA	2801961	Front - apply		90-On	1	
11B	TBA	2801961	Rear - apply		90-On	1	
12B	TBA	2466803	Rear - backing (bevel)		90-On	1	
N I	028761X		PowerPack® Front Clutch - backing (top)	.170	90-On	2	
13F	027762-550	4461030	Overdrive Direct - backing (stepped)	.216	90-On	1	internal teeth
13F	027762J540	4461183	Overdrive Direct - apply (A618)	.215	94-On	1	external teeth - stepped
14F	027762A550	4461031	Overdrive Direct - apply	.216	90-On	1	external teeth - stepped
15E	027763-540	4461033	Overdrive Brake - Top	.215	90-On	1	
16E	027763-540	4461033	Overdrive Brake - Bottom	.215	90-95	1	
15E	027763-956	4461048	Overdrive Brake - Top & Bottom	.376	90-On	1	12T - ID: 5.024"
15E	027763A	4617567	Overdrive Brake - Bottom (stepped)	.120	03-On	1	12T - ID: 5.024"

OEI® Original Equipment Improvements

ILL	ALTO No.	REF No.	Description	Spec	Year	Qty	Notes
KT	028755	NA	PowerPack® Front		90-On	1	
KT	028756	NA	PowerPack® Rear		90-02	1	
KT	028756A	NA	PowerPack® Rear		03-On	1	
KT	028757	NA	PowerPack® Overdrive Brake		90-On	1	
KT	028985C	SK® TFOD-JR	Shift Kit®	Transgo®	90-On	1	
KT	028985B	TFOD-Diesel	Shift Kit®	Transgo®	90-On	1	
KT	028992	TFOD-HD2	Reprogramming Kit™ - Tow & Go	Transgo®	90-On	1	
KT	028992A	TFOD-3	Reprogramming Kit™ - Competition	Transgo®	90-On	1	Full "stick" shift
KT	028993	SK-48RE	Shift Kit®	Transgo®	90-On	1	

SHAFTS

ILL	ALTO No.	REF No.	Description	Spec	Year	Qty	Notes
44D	028381	4746942	Intermediate - OE Style		90-93	1	
44D	028381PS	4746942X	Intermediate - Modified		90-93	1	
44D	028381A	4617611	Intermediate - OE Style		94-On	1	
44D	028381APS	4617611X	Intermediate - Modified		94-On	1	

BANDS

ILL	ALTO No.	REF No.	Description	Spec	Year	Qty	Notes
17A	028961	4329853	Front (Kickdown) - Flex	Tan	90-On	1	
18C	028952	4505091	Rear (Reverse) - A518 only	Tan	90-91	1	thick lug 1-5/8" Wide
18C	028952B	4471476AB	Rear (Reverse) - Rigid - A518 only	Tan	92-On	1	thick lug - wider
18C	028952A	4531231	Rear (Reverse) - Split A618 only	Tan	90-On	1	

FILTERS

ILL	ALTO No.	REF No.	Description	Spec	Year	Qty	Notes
19F	028944	3515996	Filter - Large Felt		90-97	1	
19F	028948	52118789	Filter - Metal & Plastic		98-On	1	

METAL CLAD SEALS

ILL	ALTO No.	REF No.	Description	Spec	Year	Qty	Notes
20A	028400	3515137	Front Pump	Silicone	90-93	1	
20A	028400A	4531225	Front Pump	Vamac®	94-On	1	Does Retro-fit
21G	031401	3515383	Extension Housing without boot		90-On	1	
21G	023405	4531216	Extension Housing with boot		90-On	1	
21G	028415	4412507	Adapter Housing (4 x 4)		90-On	1	

CHRYSLER

A518 (46RE, 46RH) 1990-02
A618 (47RE, 47RH) 1994-02, A618 (48RE) 2003-On

METAL CLAD SEALS

22C	027406	4505098	Manual Lever		90-On	1	

SEALING RINGS

ILL	ALTO No.	REF No.	Description	Spec	Year	Qty	Notes
KT	028601A	A137	Sealing Ring Kit - 8M / 9T		90-On	1	with SSP rings
23A	028111	3743689	Front Pump stator (Reaction Shaft)		90-On	2	Seal Plated (SSP)
24B	028104	2801054	Input Shaft - small	1.175	90-93	2	
24B	028104A	4741836	Input Shaft - small	1.245	94-On	1-2	
25B	028110	4058443	Input Shaft - Large (Rear Clutch retainer)		90-On	1	
26G	027112	4461011	Governor Support		90-On	3	
27D	028102	1942123	Kickdown Servo - Large		90-On	1	
28E	028102	1942123	Kickdown Servo cover		90-On	1	
29D	027119	4412444	Kickdown Servo - Small	Teflon	90-On	1	
29D	027109	2124851	Kickdown Servo - Small	Metal	90-On	opt.	
30D	027123	3743013	Accumulator - release (large)	Teflon	90-On	1	
30D	027101	1315158	Accumulator - release (large)	Metal	90-On	opt.	
31D	027122	3743010	Accumulator - apply (small)	Teflon	90-On	1	
31D	027104	1401221	Accumulator - apply (small)	Metal	90-On	opt.	
32D	027121	4431958	3-4 Accumulator - release (large)	Teflon	90-On	1	
33D	027120	4431959	3-4 Accumulator - apply (small)	Teflon	90-On	1	

SNAP RINGS

ILL	ALTO No.	REF No.	Description	Spec	Year	Qty	Notes
35B	028252-060	1942063	Rear Clutch PP retainer - rear	.060	90-On	AR	
35B	028252-074	1942064	Rear Clutch PP retainer - rear	.074	90-On	AR	
35B	028252B088	1942065	Rear Clutch PP retainer - rear	.088	90-On	AR	
35B	028252-106	2466811	Rear Clutch PP retainer - rear	.106	90-On	AR	
N I	028254-090	4461059	OD Ring Gear to Output Shaft	.090	90-On	AR	
N I	028253W	4461032	Overdrive Direct		90-On	AR	

SOLENOIDS

ILL	ALTO No.	REF No.	Description	Spec	Year	Qty	Notes
N I	028501	56028196AD	Solenoid, Governor Sensor 46RE, 47RE		90-On	1	

BUSHINGS

ILL	ALTO No.	REF No.	Description	Spec	Year	Qty	Notes
KT	028630	NA	Bushing Kit		90-On	1	
KT	028625B	NA	Bushing Kit (10 bushings)		90-On	1	
KT	028630	NA	Short Bushing Kit (2 bushings)		90-On	1	
36A	028201	2205031	Front Pump body	Babbit	90-On	1	
36A	028200	2466324	Front Pump body	Bronze	90-On	opt.	
37A	028208	4058647	Front Clutch retainer		90-On	1	
38A	028206	2801348	Stator Support	1.125	90-93	1	
38A	028206A	4617416	Stator Support	1.250	94-On	1	
39B	028203	3681709	Input Shaft		90-On	1	
40C	028205	1736520	Reverse Sun Gear		90-On	2	
41G	027216	4461007	Output Shaft - pilot		90-On	1	
42G	027217	4461006	Output Shaft - inner		90-On	1	
43G	023225	2801724	Extension Housing		90-On	1	

CHRYSLER

A518 (46RE, 46RH) 1990-02
A618 (47RE, 47RH) 1994-02, A618 (48RE) 2003-On

WASHERS

ILL	ALTO No.	REF No.	Description	Spec	Year	Qty	Notes
KT	028635A	NA	Washer Kit		90-On	1	
45E	028161-467	4431587	Shim - Overdrive Clutch Selective	.184	90-On	1	
45E	028161-505	4431733	Shim - Overdrive Clutch Selective	.199	90-On	1	
45E	028161-544	4431588	Shim - Overdrive Clutch Selective	.214	90-On	1	

ELECTRONIC CONTROL COMPONENTS

ILL	ALTO No.	REF No.	Description	Spec	Year	Qty	Notes
N I	027502	56027720	Sensor, Governor (4 pin oval) 46RE, 47RE		96-99	1	
N I	027504	52118500	Solenoid OD L/U 4 Prog		00-On	1	
N I	028501	56028196AD	Sensor, Governor 46RE, 47RE		00-On	1	
N I	077509	4800879	Solenoid Sensor Output 46RE		97-On	1	
N I	077509	4800879	Solenoid Sensor Output 48RE		03-On	1	

CHRYSLER

A604 (40TE, 41TE, F4AC1) 1988-On
A606 (42LE) 1993-On, 42RLE 2001-On

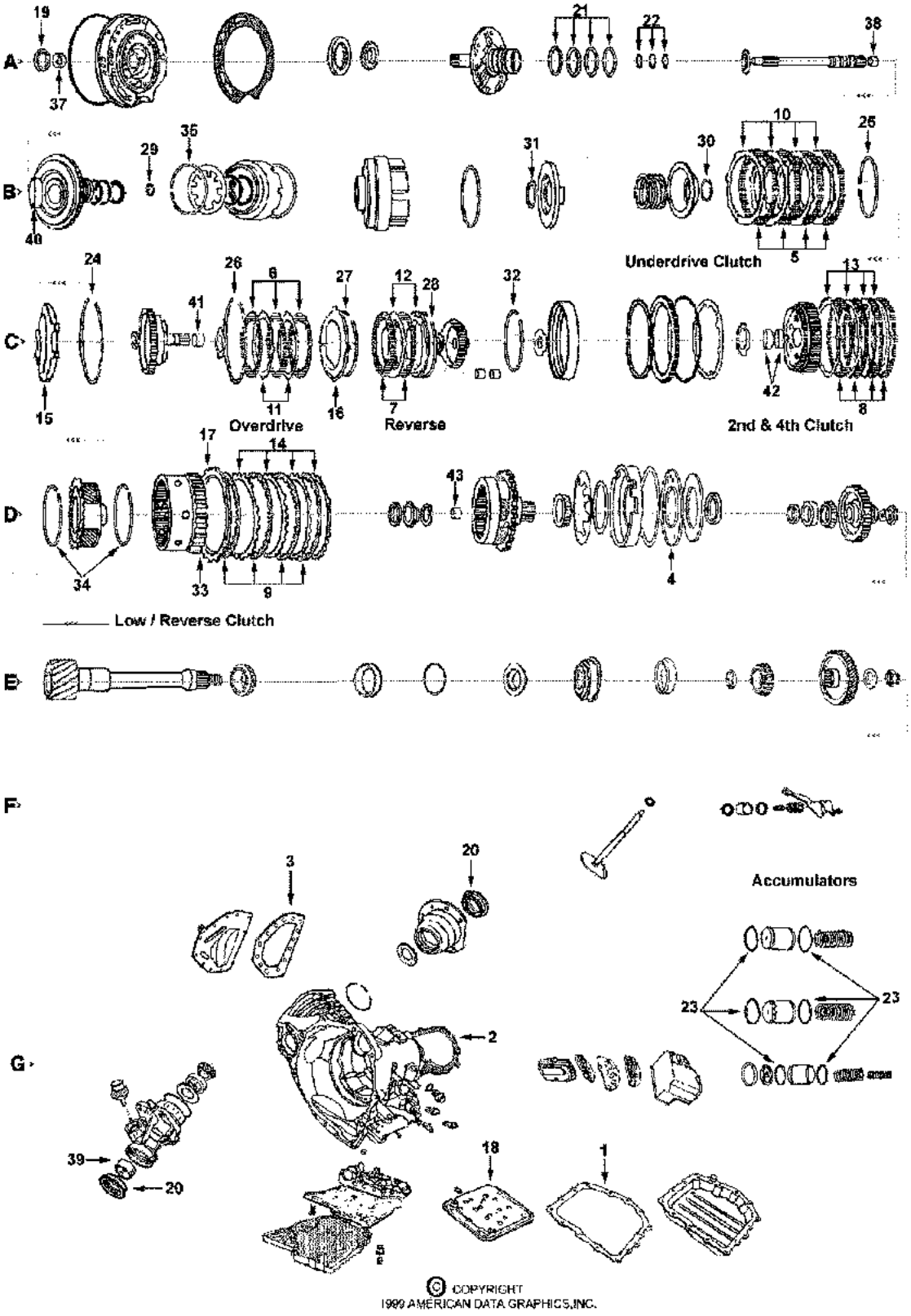

CHRYSLER

A604 (40TE, 41TE, F4AC1) 1988-On
A606 (42LE) 1993-On, 42RLE 2001-On

KITS

*Add Suffix SK for Super Kit

ILL	Description	Years	Friction Module	Steel Module	Overhaul Kit	Banner Kit	Master Kit
KT	Rebuilding Kit 40TE	88-89	077752E	077753E	077800R*	077901ELS	077901E
KT	Rebuilding Kit 40TE	90-03	077752	077753	077800R*	077901LS	077901
KT	Rebuilding Kit - Combo 40TE	88-03	077752X	077753X	077800R*	077901XLS	077901X
KT	Rebuilding Kit - 40TE with Molded Pistons	04-11	077752	077753	077800A	077901ALS	077901A
KT	Rebuilding Kit - 41TE with Molded Pistons	04-11	077752	077753	077800B	077901BLS	077901B
KT	Rebuilding Kit - 40TE, 41TE without Molded Pistons	04-11	077752	077753	077800AX	077901AXLS	077901AX
KT	Rebuilding Kit - A606, 42LE	93-97	077752	077753	077802R*	077903LS	077903
KT	Rebuilding Kit - A606, 42LE	98-On	077752B	077753A	077802R*	077903ALS	077903A
KT	Rebuilding Kit - 42RLE without Molded Pistons	03-On	077752	077753	077804RX *	077909LS	077909
	*OH kits contain cork & rubber pan gaskets						

MISCELLANEOUS GASKETS & KIT COMPONENTS

ILL	ALTO No.	REF No.	Description	Spec	Year	Qty	Notes
1G	077816	NA	Gasket, Oil pan - A604	Cork/Rub	88-On	1	
N I	077816B	NA	Gasket, Oil pan - A606	Cork/Rub	93-On	1	
2G	077816A	NA	Gasket, Side cover - A604	Cork/Rub	88-On	1	
N I	077816C	NA	Gasket, Side cover - A606	Cork/Rub	93-On	1	
3F	077818	NA	Gasket, Differential cover	Cork/Rub	88-On	1	

FRICTION CLUTCHES

ILL	ALTO No.	REF No.	Description	Spec	Year	Qty	Notes
5B	077700	4531678	Underdrive	.073	88-On	4	HEG - 28T - OD: 5.432" - PL
6C	077700A	4377137	Overdrive	.086	88-89	3	HEG - 27T - OD: 5.432" - PL
6C	077700	4531678	Overdrive	.073	90-On	4	HEG - 28T - OD: 5.432" - PL
6C	077710-230	NA	Overdrive - KEVLAR® Heavy Duty Oversize	.090	90-On	AR	Kev - 28T - OD: 5.432" - PL
7C	077700	4531678	Reverse	.073	88-97	2	HEG - 28T - OD: 5.432" - PL
7C	077700	4531678	Reverse	.073	98-On	2-4	HEG - 28T - OD: 5.432" - PL
8C	077702	4799860AA	2nd & 4th	.086	88-On	4	HEG - 31T - OD: 6.064" - PL
9D	077704	4567573AB	Low / Reverse	.072	88-On	5	HEG - 32T - OD: 6.064" - PL

FRICTION CLUTCHES - HI-PERFORMANCE - Red Eagle®

ILL	ALTO No.	REF No.	Description	Spec	Year	Qty	Notes
6C	077740A	NA	Overdrive - PowerPack® Component	.085	88-On	AR	Red - 27T - OD: 5.430" - PL
6C	077740-160	NA	Overdrive - PowerPack® Component	.062	88-On	AR	Red - 27T - OD: 5.430" - PL

STEEL CLUTCHES

ILL	ALTO No.	REF No.	Description	Spec	Year	Qty	Notes
10B	077701	4659053	Underdrive	.067	88-On	3-4	8T - ID: 4.528"
11C	077701A	4377190	Overdrive	.101	88-89	2	8T - ID: 4.528"
11C	077701	4659053	Overdrive	.067	90-On	3-4	8T - ID: 4.528"
11C	077701-150	NA	Overdrive - PowerPack® Component	.060	88-On	AR	8T - ID: 4.528"
12C	077701	4659053	Reverse	.067	88-97	1-2	8T - ID: 4.528"
12C	077701	4659053	Reverse	.067	98-On	1-4	8T - ID: 4.528"
13C	077703	4659054	2nd & 4th	.101	88-On	4	14T - ID: 5.255"
14D	077705	4659055	Low / Reverse	.068	88-On	5	14T - ID: 5.255"

PRESSURE PLATES

ILL	ALTO No.	REF No.	Description	Spec	Year	Qty	Notes
16C	TBA	4377190	Overdrive - 8 lug design		88-89	1	supercedes to 4 lug design
16C	077760A	4531925	Reverse	.340	88-On	1	ID - 4.528

CHRYSLER

A604 (40TE, 41TE, F4AC1) 1988-On
A606 (42LE) 1993-On, 42RLE 2001-On

OEI® Original Equipment Improvements

ILL	ALTO No.	REF No.	Description	Spec	Year	Qty	Notes
KT	077758	NA	Kit, Low/Reverse CaseSaver™		88-On	1	
KT	077670	NA	Low / Reverse retainer with screws		88-On	1	
KT	077985	SK® 604	Shift Kit®	Transgo®	88-On	1	

FILTERS

ILL	ALTO No.	REF No.	Description	Spec	Year	Qty	Notes
18G	077940	4864505AB	Filter - A604		88-On	1	
18G	077942	4796730AB	Filter - A606		93-On	1	
N I	077944A	52852913AB	Filter - 42RLE		03-On	1	

METAL CLAD SEALS

ILL	ALTO No.	REF No.	Description	Spec	Year	Qty	Notes
19A	027400	4269057	Front Pump	Silicone	88-97	1	
19A	027400A	4412475	Front Pump	Vamac®	98-On	1	
20F	045401	4567496AB	Axle		88-On	2	
N I	028402	4269956	Adapter Housing (4 x 4)		01-On	1	

SEALING RINGS

ILL	ALTO No.	REF No.	Description	Spec	Year	Qty	Notes
KT	077600	A136	Sealing Ring Kit - 4M / 11T		88-On	1	
21A	077100	4471874	Front Pump stator - seal plated (SSP)	Metal	88-On	4	
22A	077101	4446543	Input Shaft	Teflon	88-On	3	
23G	077102	4446544	Accumulator piston	Teflon	88-On	8	

SNAP RINGS

ILL	ALTO No.	REF No.	Description	Spec	Year	Qty	Notes
KT	077680	NA	Kit, complete		88-On	1	
KT	077681	NA	Kit, Underdrive / Overdrive / Reverse only		88-96	1	
KT	077681A	NA	Kit, Underdrive / Overdrive / Reverse only		97-On	1	
24C	077250T	4377189	Underdrive PP - Red Stripe / Taper	.068	88-90	1	
24C	077251T	4531411	Underdrive PP - Blue Stripe / Taper	.060	91-92	1	
24C	077253T	4567602	Underdrive PP - Turquoise Stripe / Taper	.077	93-96	1	
24C	077253AT	4659934	Underdrive PP - Flat	.086	97-On	1	
25B	077251	4412307	Underdrive Clutch retainer	.061	88-96	1	
25B	077251-076	4659980	Underdrive Clutch retainer	.076	97-On	1	
30B	077261	6501715	Underdrive Spring retainer	.075	88-On	1	
31B	077262	6501812	Input Clutch retainer	.088	88-On	1	
26C	077259W	4505621	Overdrive Clutch retainer		88-On	1	wave
27C	077258	4505622	Overdrive PP retainer	.070	88-On	1	
28C	077252-060	4377195	Reverse Clutch retainer	.060	88-On	AR	
28C	077252-070	4412871	Reverse clutch retainer	.070	88-On	AR	
28C	077252-080	4412872	Reverse clutch retainer	.080	88-On	AR	
28C	077252-090	4412873	Reverse clutch retainer	.090	88-On	AR	
29B	077260	6501702	Input Shaft	.062	88-On	1	
32D	077254	4412395	Low / Reverse PP retainer	.039	88-On	1	
33D	077254T	4412269	Low / Reverse PP retainer - red stripe	.068	88-98	1	taper
33D	077254AT	4799858	Low / Reverse PP retainer		99-On	1	flat
34D	077255	4130513	Front Planet	.060	88-95	2	
35B	077256	4412203	Reverse Input return spring retainer	.060	88-On	1	
36C	077257	4505591	2nd & 4th Clutch retainer	.060	88-On	1	

CHRYSLER

A604 (40TE, 41TE, F4AC1) 1988-On
A606 (42LE) 1993-On, 42RLE 2001-On

BUSHINGS

ILL	ALTO No.	REF No.	Description	Spec	Year	Qty	Notes
KT	077625	NA	Bushing Kit - (13)		88-On	1	
KT	077630	NA	Short Bushing Kit - (4)		88-On	1	
37A	027202	2466796	Front Pump body		88-On	1	
38A	077201	4212211	Input Shaft - rear		88-On	1	
38A	077201A	4212211AB	Input Shaft - rear		01-On	1	
39G	045207	4269961	Extension Housing - some models		88-On	1	
40B	077203	4377170	Input Clutch Hub		88-On	1	
40B	077203A	92003-01K	Input Clutch Hub	Sonnax	88-On	opt.	restores clearance
41C	077204	4412219	Overdrive Clutch Hub		88-On	2	
41C	077204A	92004-L	Overdrive Clutch Hub - 1pc design	Sonnax	96-On	opt.	
42C	077205	4412222	2nd & 4th Clutch Hub - small I.D.		89-93	2	
42C	077205A	4659619	2nd & 4th Clutch Hub - large I.D.		94-On	2	
43D	077206	4412230	Rear Planetary carrier		88-On	1	

WASHERS

ILL	ALTO No.	REF No.	Description	Spec	Year	Qty	Notes
KT	077635	NA	Kit		88-On	1	

ELECTRONIC CONTROL COMPONENTS

ILL	ALTO No.	REF No.	Description	Spec	Year	Qty	Notes
N I	077506	5015646AC 50083	Solenoid Assembly A604, 41TE		89-On	1	
N I	077508	4800878	Sensor, Input A604, A606		89-On	1	
N I	077509	4800879	Sensor, Output A604, A606		89-On	1	

PISTONS

ILL	ALTO No.	REF No.	Description	Spec	Year	Qty	Notes
KT	077671	NA	Piston Kit, 40TE		04-11	1	3 pistons
KT	077671A	NA	Piston Kit, 41TE		04-11	1	3 pistons
KT	077672	NA	Piston Kit, 42RLE		03-On	1	3 pistons
NI	077301	4431612	Piston, Spring retainer		88-On	1	

HARD PARTS

ILL	ALTO No.	REF No.	Description	Spec	Year	Qty	Notes
4D	077360A	4431648	Retainer, Low / Reverse piston		88-On	1	
N I	077315	6501819	Screw, Low / Reverse retainer to housing		88-On	3	

CHRYSLER
62TE
2007-On

KITS

*Add Suffix SK for Super Kit

ILL	Description	Years	Friction Module	Steel Module	Overhaul Kit	Banner Kit	Master Kit
KT	Rebuilding Kit	07-On	077752F	077753F	077806	077911LS	077911

MISCELLANEOUS GASKETS & KIT COMPONENTS

ILL	ALTO No.	REF No.	Description	Spec	Year	Qty	Notes
N I	077820	NA	Pan Gasket	Cork/Rubber	07-On	1	

FRICTION CLUTCHES

ILL	ALTO No.	REF No.	Description	Spec	Year	Qty	Notes
N I	077700	4659635	Underdrive	.073	07-On	4	HEG - 28T - OD: 5.432" - PL
N I	077700	4659635	Overdrive	.073	07-On	4	HEG - 28T - OD: 5.432" - PL
N I	077700	4659635	Reverse	.073	07-On	2	HEG - 28T - OD: 5.432" - PL
N I	077702	4567212	2nd & 4th	.086	07-On	4	HEG - 31T - OD: 6.064" - PL
N I	077704	4377134	Low / Reverse	.072	07-On	5	HEG - 32T - OD: 6.064" - PL
N I	077706A152	05078628AA	Underdrive Direct (1 sided) - internal spline	.060	07-On	6	HEG - 29T - OD: 4.467" - PL
N I	077707A152	NA	Underdrive Direct (1 sided) - external spline	.060	07-On	6	HEG - 30T - ID: 3.634" - PL
N I	077708-183	05078609AA	Underdrive Low	.072	07-On	3	HEG - 31T - OD: 4.773" - SB

STEEL CLUTCHES

ILL	ALTO No.	REF No.	Description	Spec	Year	Qty	Notes
N I	077701	4659053	Underdrive	.067	07-On	4	8T - ID: 4.528"
N I	077701B200	68010495AA	Overdrive - 4 notched teeth	.078	07-On	3	8T - ID: 4.528"
N I	077701	4659053	Reverse	.067	07-On	1	8T - ID: 4.528"
N I	077703A250	68004330A	2nd & 4th	.099	07-On	3	16T - ID: 5.255"
N I	077703A170	68004331AA	2nd & 4th	.067	07-On	1	16T - ID: 5.255"
N I	077703A170	68004331AA	Low / Reverse	.067	07-On	4	16T - ID: 5.255"
N I	077703A250	68004330A	Low / Reverse	.099	07-On	1	16T - ID: 5.255"
N I	077709-173	68029389AA	Underdrive Low	.068	07-On	3	42T - ID: 4.114"

FILTERS

ILL	ALTO No.	REF No.	Description	Spec	Year	Qty	Notes
N I	077946	5078555AA	Filter		07-On	1	

MOLDED PISTONS

ILL	ALTO No.	REF No.	Description	Spec	Year	Qty	Notes
N I	077673	NA	Piston Kit		07-On	1	6 Pistons

HARD PARTS

ILL	ALTO No.	REF No.	Description	Spec	Year	Qty	Notes
N I	077360A	4800255AB	Retainer, Low / Reverse piston		07-On	1	

CHRYSLER

TF8 - A727 (36RH, 37RH)

1962-97

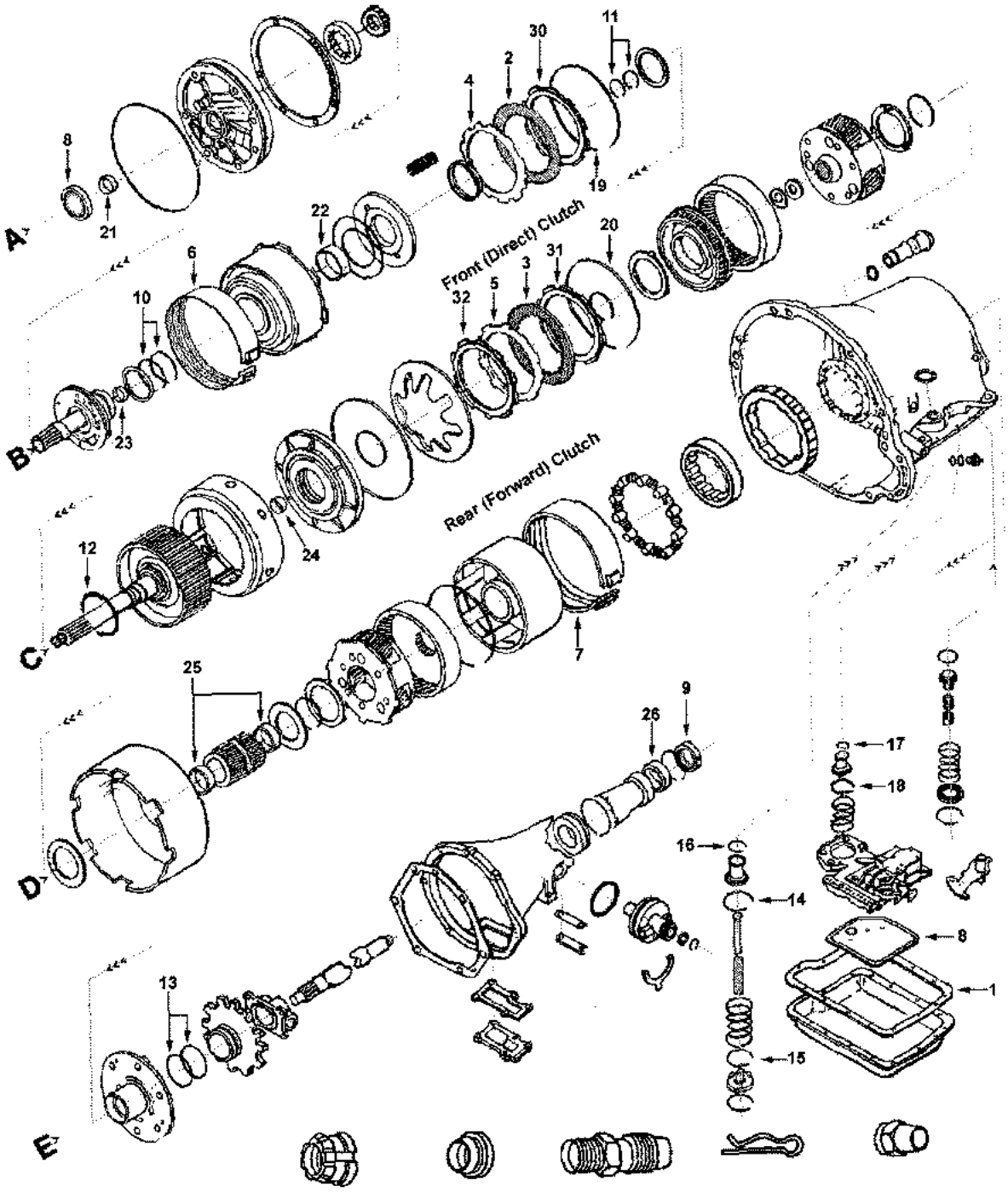

© COPYRIGHT
1999 AMERICAN DATA GRAPHICS,INC.

CHRYSLER

TF8 - A727 (36RH, 37RH)

1962-97

KITS

*Add Suffix SK for Super Kit

ILL	Description	Years	Friction Module	Steel Module	Overhaul Kit	Banner Kit	Master Kit
KT	Rebuilding Kit	62-70	028752	028753	028800	028901LS	028901
KT	Rebuilding Kit	71-97	028752	028753	028802	028903LS	028903
KT	Rebuilding Kit - with Heg Frictions	71-97	028752G	028753	028802	TBA	TBA

KITS - HI-PERFORMANCE Red Eagle®

ILL	Description	Years	Friction Module	Steel Module	Overhaul Kit	Banner Kit	Master Kit
KT	Rebuilding Kit	71-97	028752HP	028753HP	028802	028903HPLS	028903HP

KITS - HI-PERFORMANCE with PowerPack®

ILL	Description	Years	Friction and Steel Module	Overhaul Kit	Banner Kit	Master Kit
KT	Rebuilding Kit with Front PowerPack®	71-97	028750HPPWR	028802	NA	028903HPPWR

MISCELLANEOUS GASKETS & KIT COMPONENTS

ILL	ALTO No.	REF No.	Description	Spec	Year	Qty	Notes
1E	028816	2464324	Gasket, Oil Pan	Cork/Rub	62-97	1	
N I	032003	6023943	Washer, Front Pump bolts		62-97	8	

FRICTION CLUTCHES

ILL	ALTO No.	REF No.	Description	Spec	Year	Qty	Notes
2B	028718	4617202	Front (Direct)	.095	62-97	3-4	HEG - 62T - OD: 6.700" - WF
3C	028710	5252259	Rear (Forward)	.061	62-97	4	Tan - 62T - OD: 6.700" - SM
3C	028710A155	NA	Rear (Forward)	.061	62-97	4	Tan - 62T - OD: 6.700" - 8PL

FRICTION CLUTCHES - HI-PERFORMANCE - Red Eagle® or Carbonite®

ILL	ALTO No.	REF No.	Description	Spec	Year	Qty	Notes
3B	028710C155	NA	Rear (Forward) Carbonite®	.061	62-97	4	Crb - 62T - OD: 6.700" - 8PL
2B	028740	NA	Front (Direct)	.095	62-97	3-4	Red - 62T - OD: 6.700" - SM
2B	028740PL	NA	Front (Direct)	.095	62-97	3-4	Red - 62T - OD: 6.700" - PL
3B	028742	NA	Rear (Forward) - smooth	.061	62-97	4	Red - 62T - OD: 6.700" - SM
3B	028742A155	NA	Rear (Forward) - grooved	.061	62-97	4	Red - 62T - OD: 6.700" - PL

FRICTION CLUTCHES - HI-PERFORMANCE - UNIT PACKS (ONE Rebuild)

ILL	ALTO No.	REF No.	Description	Spec	Year	Qty	Notes
KT	028740UP4	NA	UNIT PACK - Front	.095	62-97	1	4 Red Eagle® Frictions
KT	028742UP4	NA	UNIT PACK - Rear	.061	62-97	1	4 Red Eagle® Frictions

STEEL CLUTCHES

ILL	ALTO No.	REF No.	Description	Spec	Year	Qty	Notes
4B	028701	52118812AB	Front (Direct)	.068	62-97	4	12T - ID: 5.342"
5C	028701	52118812AB	Rear (Forward)	.068	62-97	4	12T - ID: 5.342"
4B	028701-122	NA	Front & Rear - selective	.048	62-97	AR	12T - ID: 5.342"
4B	028701-200	NA	Front & Rear - selective	.079	62-97	AR	12T - ID: 5.342"
4B	028707	2124826OS	Front & Rear - oversize	.090	62-97	AR	12T - ID: 5.342"

CHRYSLER

TF8 - A727 (36RH, 37RH)

1962-97

STEEL CLUTCHES - HI-PERFORMANCE - Kolene®

ILL	ALTO No.	REF No.	Description	Spec	Year	Qty	Notes
4B	028701K	NA	Front & Rear	.068	62-97	4/4	Kol - 12T - ID: 5.342"
4B	028701K200	NA	Front & Rear - selective	.079	62-97	AR	Kol - 12T - ID: 5.342"

STEEL CLUTCHES - HI-PERFORMANCE - UNIT PACKS (ONE Rebuild)

ILL	ALTO No.	REF No.	Description	Spec	Year	Qty	Notes
KT	028701KUP4	NA	Front or Rear	.068	62-97	1	4 Kolene® Steels

PRESSURE PLATES

ILL	ALTO No.	REF No.	Description	Spec	Year	Qty	Notes
30B	TBA	2801961	Front - apply		62-93	1	
30B	TBA	4617567	Front - apply		94-97	1	
31C	TBA	2801961	Rear - apply		62-93	1	
31C	TBA	4617567	Rear - apply		94-97	1	
32C	TBA	2466803	Rear - backing (bevel)		62-97	1	

OEI® Original Equipment Improvements

ILL	ALTO No.	REF No.	Description	Spec	Year	Qty	Notes
KT	028755	NL	PowerPack® Front Clutch		62-97	1	
KT	028985A	SK® TF-SC	Shift Kit®	Transgo®	62-97	1	No Yo Yo
KT	028991	TF-1	Reprogramming Kit™	Transgo®	62-97	1	Heavy Duty & Hi Perf.
KT	028991A	TF-2	Reprogramming Kit™	Transgo®	62-97	1	Competition
KT	028991B	TF-3	Reprogramming Kit™	Transgo®	62-97	1	Converts to manual shift

BANDS

ILL	ALTO No.	REF No.	Description	Spec	Year	Qty	Notes
6B	028961	4329853	Front (Kickdown) - Flex	Tan	62-97	1	
7D	028952E	4412588	Rear (Reverse) - Rigid	Tan	62-89	1	
7D	028952	4505091	Rear (Reverse) - Rigid	Tan	90-91	1	thick lug 1-5/8" wide
7D	028952B	4471476	Rear (Reverse) - Rigid	Tan	92-97	1	thick lug - wider

FILTERS

ILL	ALTO No.	REF No.	Description	Spec	Year	Qty	Notes
8E	028940	3621456	Filter - small felt		62-65	1	
8E	028944	3515996	Filter - large felt		66-97	1	Does Retro-fit to 1962
8E	028946	NA	Filter - large brass		66-97	1	

METAL CLAD SEALS

ILL	ALTO No.	REF No.	Description	Spec	Year	Qty	Notes
8A	028400	3515137	Front Pump	Silicone	62-97	1	
8A	028400A	4531225	Front Pump	Vamac®	62-97	opt.	Does Retro-fit
9E	031401	3515383	Extension Housing without boot		62-97	1	
9E	023405	4531216	Extension Housing with boot		62-97	1	
N I	027406	4505098	Manual Lever		62-97	1	

CHRYSLER

TF8 - A727 (36RH, 37RH)

1962-97

SEALING RINGS

ILL	ALTO No.	REF No.	Description	Spec	Year	Qty	Notes
KT	028600	A108	Sealing Ring Kit - 13M		62-70	1	
KT	028601	A109	Sealing Ring Kit - 12M		71-97	1	
KT	028601T	A109F	Sealing Ring Kit -		71-97	1	
10B	028108	2124813	Front Pump Stator		62-70	2	
10B	028109	3515321	Front Pump Stator		71-97	2	Does Retro-Fit
10B	028111	3743689	Front Pump stator (Reaction Shaft)		71-97	opt.	Seal Plated (SSP)
11B	028103	1942041	Input Shaft - small	1.125	62-66	2	
11B	028104	2801054	Input Shaft - small	1.175	67-93	2	
11B	028104A	4741836	Input Shaft - small	1.245	94-97	1-2	
12C	028110	4058443	Input Shaft - Large (Rear Clutch retainer)		62-97	1	
13E	027100	1942109	Governor		62-97	2	
14E	028102	1942123	Kickdown Servo - Large		62-97	1	
15E	028102	1942123	Kickdown Servo - Guide		62-97	1	
16E	027109	2124851	Kickdown Servo - Small	Metal	62-97	1	
17E	027104	1401221	Accumulator - apply (small)	Metal	62-97	1	
18E	027101	1315158	Accumulator - release (large)	Metal	62-97	1	

SNAP RINGS

ILL	ALTO No.	REF No.	Description	Spec	Year	Qty	Notes
KT	028680	NA	Kit		62-97	1	
20C	028252-060	1942063	Rear Clutch PP retainer - rear	.060	62-97	AR	
20C	028252-074	1942064	Rear Clutch PP retainer - rear	.074	62-97	AR	
20C	028252B088	1942065	Rear Clutch PP retainer - rear	.088	62-97	AR	
20C	028252-106	2466811	Rear Clutch PP retainer - rear	.106	62-97	AR	

BUSHINGS

ILL	ALTO No.	REF No.	Description	Spec	Year	Qty	Notes
KT	028625	NA	Kit		71-97	1	
KT	028625A	NA	Kit		62-97	1	
21A	028200	2466324	Front Pump body	Bronze	62-97	1	
21A	028201	2205031	Front Pump body	Babbit	62-97	opt.	
22B	028202	2205241	Front Clutch retainer - narrow		62-70	1	
22B	028208	4058647	Front Clutch retainer - wide w/ oil groove		71-97	1	
23B	TBA	2205240	Stator Support		62-66	1	
23B	028206	2801348	Stator Support	1.125	67-93	1	
23B	028206A	4617416	Stator Support	1.250	94-97	1	
24C	028203	3681709	Input Shaft		62-97	1	
25D	028205	1736520	Reverse Sun Gear		62-97	2	
26E	023225	2801724	Extension Housing		62-97	1	

WASHERS

ILL	ALTO No.	REF No.	Description	Spec	Year	Qty	Notes
KT	028635	NA	Washer Kit		62-97	1	

CHRYSLER

TF6 - A904, 998, 999 1960-On
30RH, 31RH, 32RH

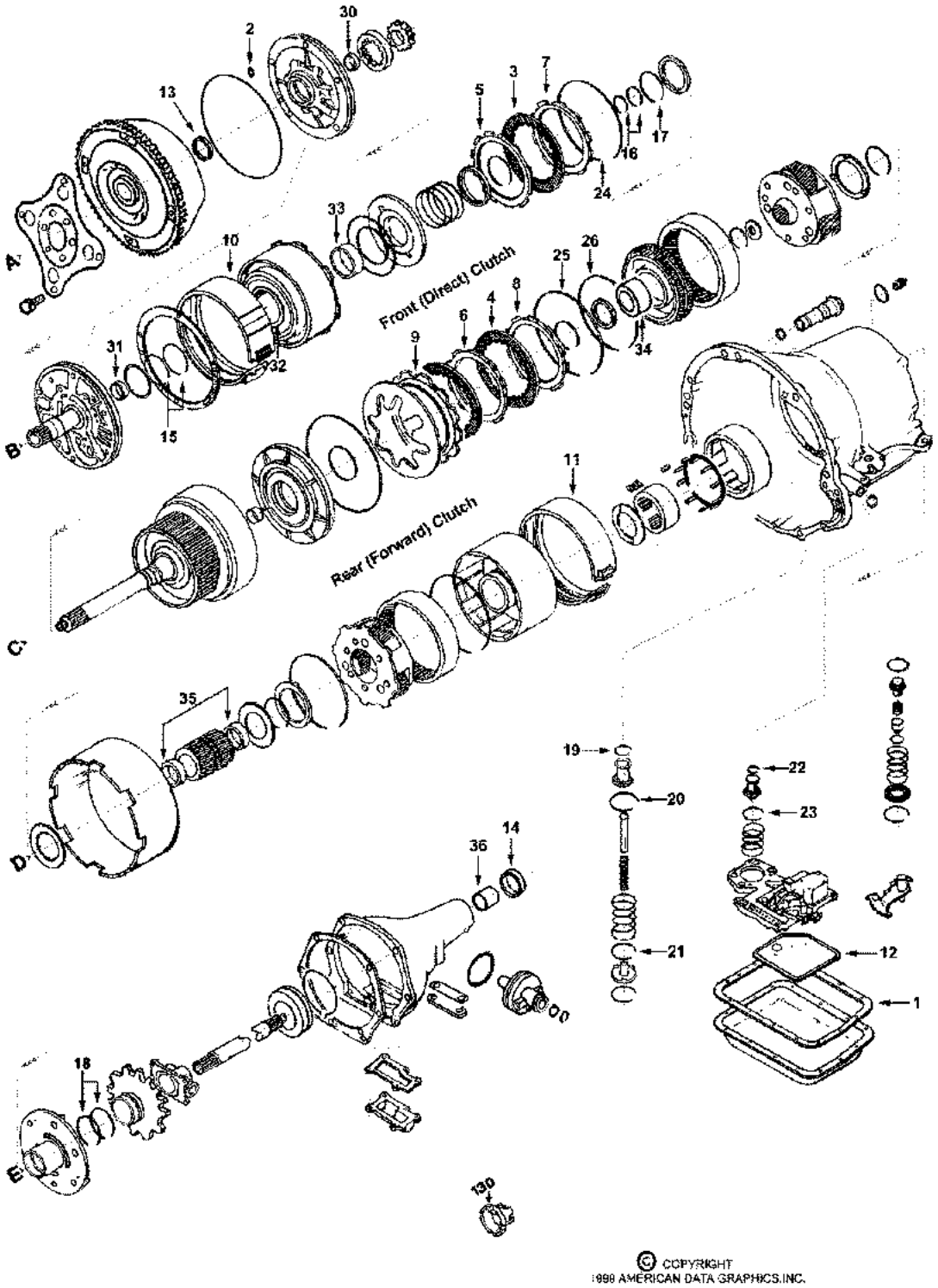

CHRYSLER

TF6 - A904, 998, 999 1960-On
30RH, 31RH, 32RH

KITS

*Add Suffix SK for Super Kit

ILL	Description	Years	Friction Module	Steel Module	Overhaul Kit	Banner Kit	Master Kit
KT	Rebuilding Kit	60-71	027752	027753	027800	027901LS	027901
KT	Rebuilding Kit	72-On	027752	027753	027802	027903LS	027903
KT	Rebuilding Kit - with Heg Frictions	72-On	027752D	027753	027802	TBA	TBA
KT	Rebuilding Kit - 30RH (Jeep)	99-On	027752C	027753C	027802A	027903ALS	027903A
KT	Rebuilding Kit - Baby 904 (Colt-Arrow)	74-80	027752	027753	027806	027907LS	027907

KITS - HI-PERFORMANCE Red Eagle®

ILL	Description	Years	Friction Module	Steel Module	Overhaul Kit	Banner Kit	Master Kit
KT	Rebuilding Kit - TF6	72-On	027752HP	027753HP	027802	027903HPLS	027903HP

MISCELLANEOUS GASKETS & KIT COMPONENTS

ILL	ALTO No.	REF No.	Description	Spec	Year	Qty	Notes
1E	027816	4295875	Gasket, Oil Pan	Cork/Rub	60-On	1	
1E	027818	3681438	Gasket, Oil Pan - Colt, Arrow	Cork/Rub	72-On	1	
22A	032003	6023943	Washer, Front Pump bolts		60-On	8	

FRICTION CLUTCHES

ILL	ALTO No.	REF No.	Description	Spec	Year	Qty	Notes
3B	027700	4617362	Front (Direct)	.086	60-On	3-5	Tan - 45T - OD: 4.940" - PL
4C	027706	4531068	Rear (Forward) - Smooth	.061	60-On	3-4	Tan - 45T - OD: 4.940" - SM
4C	027706PL	4713880	Rear (Forward) - Parallel Lines	.061	60-On	3-4	Tan - 45T - OD: 4.940" - PL

FRICTION CLUTCHES - HI-PERFORMANCE - Red Eagle®

ILL	ALTO No.	REF No.	Description	Spec	Year	Qty	Notes
3B	027740	NA	Front (Direct)	.086	60-On	3-5	Red - 45T - OD: 4.937" - SM
3B	027740PL	NA	Front (Direct)	.086	60-On	3-5	Red - 45T - OD: 4.937" - PL
4C	027742	NA	Rear (Forward)	.061	60-On	3-4	Red - 45T - OD: 4.940" - SM

FRICTION CLUTCHES - HI-PERFORMANCE - UNIT PACKS (ONE Rebuild)

ILL	ALTO No.	REF No.	Description	Spec	Year	Qty	Notes
KT	027740UP4	NA	UNIT PACK - Front (Direct)	.086	60-On	1	4 Red Eagle® Frictions
KT	027742UP4	NA	UNIT PACK - Rear (Forward)	.061	60-On	1	4 Red Eagle® Frictions

STEEL CLUTCHES

ILL	ALTO No.	REF No.	Description	Spec	Year	Qty	Notes
5B	027701	19402403	Front (Direct)	.068	60-On	4	12T - ID: 3.950"
6C	027701	19402403	Rear (Forward)	.068	60-On	4	12T - ID: 3.950"
5B	027701-200	NA	Front & Rear - selective	.079	60-On	AR	12T - ID: 3.950"
5B	027701A217	1942403AC	Front - Jeep	.085	99-On	4	12T - ID: 3.944" with notch
5B	027717	NA	Front & Rear - selective	.085	60-On	AR	12T - ID: 3.950"

STEEL CLUTCHES - HI-PERFORMANCE - Kolene®

ILL	ALTO No.	REF No.	Description	Spec	Year	Qty	Notes
5B	027701K	NA	Front & Rear	.068	60-On	4/4	Kol - 12T - ID: 3.950"
5B	027701K200	NA	Front & Rear - selective	.079	60-On	AR	Kol - 12T - ID: 3.950"
5B	027717K216	NA	Front & Rear - selective	.085	60-On	AR	Kol - 12T - ID: 3.950"

CHRYSLER

TF6 - A904, 998, 999 1960-On
30RH, 31RH, 32RH

STEEL CLUTCHES - HI-PERFORMANCE - UNIT PACKS (ONE Rebuild)

ILL	ALTO No.	REF No.	Description	Spec	Year	Qty	Notes
KT	027701KUP4	NA	UNIT PACK - Front or Rear	.068	60-On	1	4 Kolene® Steels

PRESSURE PLATES

ILL	ALTO No.	REF No.	Description	Spec	Year	Qty	Notes
7B	027760A548	4617176AB	Front Clutch - flat	.216	60-On	1	
8C	027760A548	4617176AB	Rear Clutch - flat	.216	60-On	1	
9C	027760B300	2466281	Rear Clutch - backing (bevel)	.118	60-On	1	

OEI® Original Equipment Improvements

ILL	ALTO No.	REF No.	Description	Spec	Year	Qty	Notes
KT	028985A	SK® TF-SC	Shift Kit®	Transgo®	60-On	1	No Yo Yor
KT	028991	TF-1	Reprogramming Kit™	Transgo®	60-On	1	Heavy Duty & Hi Perf.
KT	028991A	TF-2	Reprogramming Kit™	Transgo®	60-On	1	Competition
KT	028991B	TF-3	Reprogramming Kit™	Transgo®	60-On	1	Converts to manual shift

BANDS

ILL	ALTO No.	REF No.	Description	Spec	Year	Qty	Notes
10B	027950	4419646	Front (Kickdown) - Solid, thin lining	Tan	60-On	1	
10B	027954	4058863	Front (Kickdown) - Flex / 1.375" wide	Tan	60-On	1	
10B	027954A	4617849	Front (Kickdown) - Flex / 1.600" wide	Tan	60-On	1	
11D	027952	4431405	Rear (Reverse) - Solid / 1.375" wide	Tan	60-On	1	6 cylinder
11D	027953	4431406	Rear (Reverse) - Solid / 2.000" wide	Tan	60-On	1	8 cylinder

FILTERS

ILL	ALTO No.	REF No.	Description	Spec	Year	Qty	Notes
12E	028940	3621456	Filter - Small Felt		60-65	1	
12E	028942	3410253	Filter - Stainless		60-65	opt.	
12E	028944	3515996	Filter - Stainless		66-On	1	Does Retro-fit to 1960
12E	028946	NA	Filter - Large Brass		66-On	opt.	

METAL CLAD SEALS

ILL	ALTO No.	REF No.	Description	Spec	Year	Qty	Notes
13A	027400	4412475	Front Pump (with Flange)	Silicone	60-97	1	
13A	027400A	4269057	Front Pump (with Flange)	Vamac®	98-On	1	
14E	027403	2400163	Extension Housing with Long boot		66-72	1	
14E	027404	4058047	Extension Housing with Short boot		73-On	1	
14E	027404A	3515384	Extension Housing without boot		73-On	1	

SEALING RINGS

ILL	ALTO No.	REF No.	Description	Spec	Year	Qty	Notes
KT	027602	A101	Sealing Ring Kit - 16M		60-On	1	
KT	027602T	A101T	Sealing Ring Kit - 16T		60-On	1	
KT	027602X	A103	Sealing Ring Kit - 8M		60-On	1	
15B	027103	1942389	Front Pump Stator (reaction shaft)		60-88	2	
15B	027103A	4471874	Front Pump Stator (reaction shaft)		89-On	2	seal-plated (SSP)
16B	027104	1323593	Input Shaft (small) - Butt Joint	Metal	66-67	2	
16B	027104A	1401221	Input Shaft (small) - Hook Joint	Metal	68-On	2	
16B	027114	4269592	Input Shaft (small)	Teflon	66-On	Opt.	
17B	027109	1323593	Input Shaft (large) - Rear clutch retainer		60-77	1	
17B	027110	4028333	Input Shaft (large) - Rear clutch retainer		78-On	1	

CHRYSLER

TF6 - A904, 998, 999 1960-On
30RH, 31RH, 32RH

SEALING RINGS

ILL	ALTO No.	REF No.	Description	Spec	Year	Qty	Notes
18E	027100	1942109	Governor Support		60-On	2	
19E	027107	1672287	Kickdown Servo - apply (small)	Metal	60-88	1	6 Cylinder
19E	027117	4295965	Kickdown Servo - apply (small)	Teflon	89-On	1	6 Cylinder
19E	027105	3410374	Kickdown Servo - apply (small)	Metal	60-88	1	8 Cylinder
19E	027115	3743033	Kickdown Servo - apply (small)	Teflon	89-On	1	8 Cylinder
20E	027108	1636470	Kickdown Servo - release (large)	Metal	60-On	2	6 Cylinder
20E	027106	3410372	Kickdown Servo - release (large)	Metal	60-88	2	8 Cylinder
20E	027116	4295966	Kickdown Servo - release (large)	Teflon	89-On	2	8 Cylinder
21E	027108	1636470	Kickdown Servo - guide	Metal	60-88	1	6 Cylinder
21E	027118	3743014	Kickdown Servo - guide	Teflon	89-On	1	6 Cylinder
21E	027106	3410372	Kickdown Servo - guide	Metal	60-88	1	8 Cylinder
21E	027116	4295966	Kickdown Servo - guide	Teflon	89-On	1	8 Cylinder
22E	027104	1941831	Accumulator Piston - apply (small)	Metal	60-88	1	
22E	027122	3743010	Accumulator Piston - apply (small)	Teflon	89-On	1	
23E	027101	2124255	Accumulator Piston - release (large)	Metal	60-88	1	
23E	027123	3743013	Accumulator Piston - release (large)	Teflon	89-On	1	

SNAP RINGS

ILL	ALTO No.	REF No.	Description	Spec	Year	Qty	Notes
KT	027680	NA	Kit		60-On	1	
25B	027260W043	2466283	Forward Clutch PP retainer - inner		60-On	1	
26B	027260-060	4130761	Forward Clutch PP retainer - outer / selective	.060	60-On	AR	
26B	027260-076	4539121	Forward Clutch PP retainer - outer / selective	.076	60-On	AR	
26B	027260-098	4539122	Forward Clutch PP retainer - outer / selective	.098	60-On	AR	

BUSHINGS

ILL	ALTO No.	REF No.	Description	Spec	Year	Qty	Notes
KT	027625	NA	Kit		66-On	1	
30A	027202	2466796	Front Pump housing	Bronze	60-On	1	
30A	027202A	2204953	Front Pump housing	Babbit	60-On	1	
31B	027208	2801728	Reaction Shaft		68-77	1	
31B	027211	4058635	Reaction Shaft		68-On	1	
32B	027206	2801727	Front Clutch drum - rear	2.056	60-93	1	
32B	027206A	4617159	Front Clutch drum - rear	2.060	94-On	1	
33B	027214	4617157	Front Clutch drum - front	2.200	94-On	1	
34C	027212	3681967	Annulus gear support - front		60-On	1	
35D	027207	1942436	Reverse Sun Gear		60-On	2	
36E	023225	2801724	Extension Housing	1.81	60-On	1	
36E	027210	2801726	Extension Housing	1.69	60-On	1	Bronze

WASHERS

ILL	ALTO No.	REF No.	Description	Spec	Year	Qty	Notes
KT	027635	NA	Kit		60-On	1	

CHRYSLER
45RFE, 545RFE
1999-On

A>

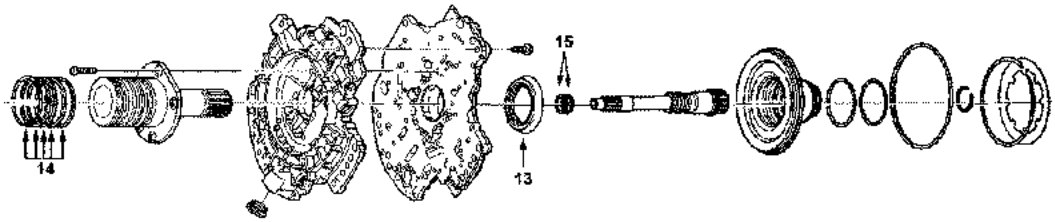

B>

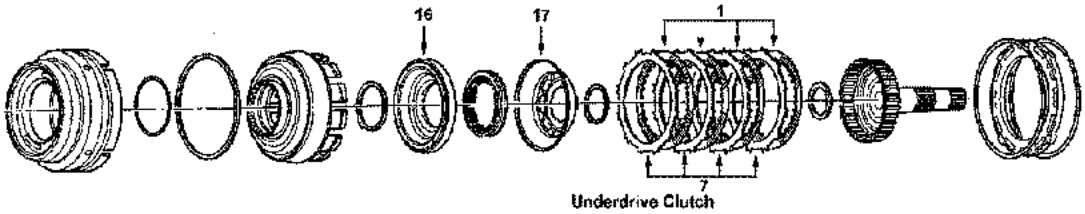

C>

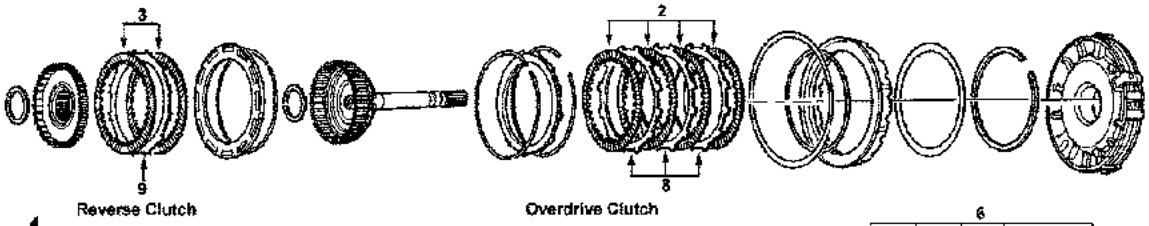

D>

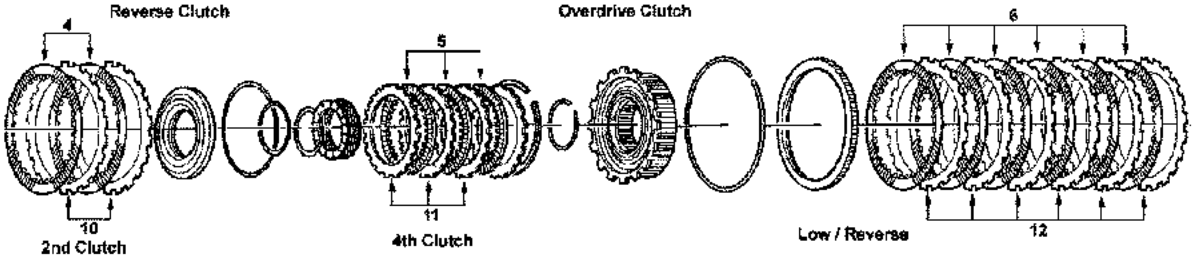

E>

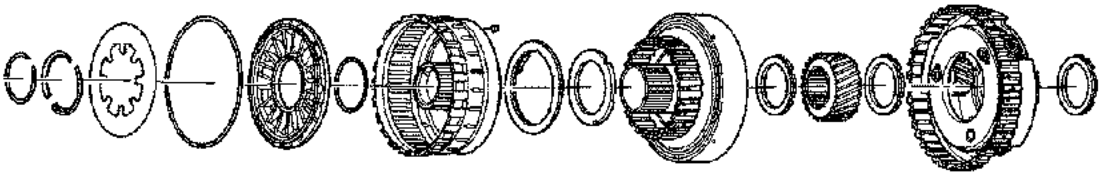

F>

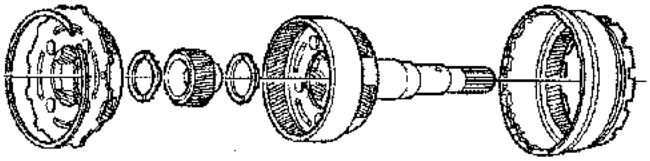

G>

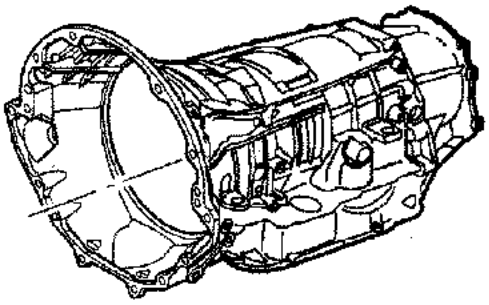

CHRYSLER

45RFE, 545RFE

1999-On

KITS

*Add Suffix SK for Super Kit

ILL	Description	Years	Friction Module	Steel Module	Overhaul Kit	Banner Kit	Master Kit
KT	Rebuilding Kit - with Molded Pistons	98-04	128752	128753	128800	128901LS	128901
KT	Rebuilding Kit - without Molded Pistons	98-04	128752	128753	128800X	128901XLS	128901X
KT	Rebuilding Kit - with Molded Pistons	05-On	128752	128753	128800A	128901ALS	128901A
KT	Rebuilding Kit - without Molded Pistons	05-On	128752	128753	128800AX	128901AXLS	128901AX

KITS - HI-PERFORMANCE with PowerPack®

ILL	Description	Years	Friction and Steel Module	Overhaul Kit	Banner Kit	Master Kit
KT	Rebuilding Kit - includes UD, OD, 2nd & 4th Clutch	98-04	128750HP	128800X	NA	128901XHP
KT	Rebuilding Kit - with Molded Pistons - includes UD, OD, 2nd & 4th Clutch	05-On	128750HP	128800A	NA	128901AHP

MISCELLANEOUS GASKETS & KIT COMPONENTS

ILL	ALTO No.	REF No.	Description	Spec	Year	Qty	Notes
N I	128816	NA	Gasket, Oil Pan	Cork/Rub	98-On	1	
N I	128815	NA	Gasket, Oil Pan	Farpak®	98-On	1	

FRICTION CLUTCHES

ILL	ALTO No.	REF No.	Description	Spec	Year	Qty	Notes
1B	128700B200	04799106	Underdrive	.078	98-On	4	HEG - 32T - OD: 6.364" - PL
2C	128700A230	04799114	Overdrive	.090	98-On	4	HEG - 32T - OD: 6.364" - SB
3C	128700B200	04799757	Reverse	.078	98-On	2	HEG - 32T - OD: 6.364" - PL
4D	128702-230	04799244	2nd	.090	98-On	2	HEG - 40T - OD: 8.107" - SB
5D	128704-230	04799530	4th	.090	98-On	3	HEG - 24T - OD: 5.331" - SB
6D	128706-200	04799461AB	Low / Reverse	.078	98-On	6	HEG - 32T - OD: 6.844" - PL

FRICTION CLUTCHES - HI-PERFORMANCE - Red Eagle®

ILL	ALTO No.	REF No.	Description	Spec	Year	Qty	Notes
1B	128740C155	NL	Underdrive (1 sided) - internal spline PowerPack® Comp.	.061	98-On	5	Red - 32T - OD: 6.357" - PL
7B	128741A145	NL	Underdrive (1 sided) - external spline PowerPack® Comp.	.057	98-On	5	Red - 12T - ID: 5.400" - PL
2C	128740C155	NL	Overdrive (1 sided) - internal spline PowerPack® Comp.	.061	98-On	5	Red - 32T - OD: 6.357" - PL
8C	128741A193	NL	Overdrive (1 sided) - external spline PowerPack® Comp.	.076	98-On	4	Red - 12T - ID: 5.400" - SB
3C	128740B200	NL	Reverse	.078	98-On	2	Red - 32T - OD: 6.357" - PL
4D	128742-203	NL	2nd Powerpack® Component	.080	98-On	3	Red - 40T - OD: 8.107" - SB
5D	128744-203	NL	4th Powerpack® Component	.080	98-On	4	Red - 24T - OD: 5.331" - SB
6D	128746-200	NL	Low / Reverse	.078	98-On	6	Red - 32T - OD: 6.844" - PL

STEEL CLUTCHES

ILL	ALTO No.	REF No.	Description	Spec	Year	Qty	Notes
7B	128701-170	04799105AB	Underdrive	.068	98-On	4	12T - ID: 5.400"
8C	128701-220	04799398AB	Overdrive	.086	98-On	3-4	12T - ID: 5.400"
9C	128701-170	04799105AB	Reverse	.068	98-On	1-2	12T - ID: 5.400"
10D	128703-323	04799243	2nd	.127	98-On	2	10T - ID: 6.771"
11D	128705-250	04799529	4th	.099	98-On	3	20T - ID: 4.239"
12D	128707-170	04799460	Low / Reverse	.078	98-On	6	45T - ID: 5.697"

STEEL CLUTCHES - HI-PERFORMANCE - Kolene®

ILL	ALTO No.	REF No.	Description	Spec	Year	Qty	Notes
9C	128701K170	NL	Reverse	.068	98-On	1-2	Kol - 12T - ID: 5.400"

CHRYSLER

45RFE, 545RFE

1999-On

STEEL CLUTCHES - HI-PERFORMANCE - Kolene®

ILL	ALTO No.	REF No.	Description	Spec	Year	Qty	Notes
10D	128703K157	NL	2nd PowerPack® Component	.062	98-On	3	Kol - 10T - ID: 6.771"
11D	128705K157	NL	4th PowerPack® Component	.062	98-On	4	Kol - 20T - ID: 4.239"
12D	128707K170	NL	Low / Reverse	.078	98-On	6	Kol - 45T - ID: 5.697"

PRESSURE PLATES

ILL	ALTO No.	REF No.	Description	Spec	Year	Qty	Notes
N I	128761A	04799108AD	Underdrive/Overdrive		98-On	1	stepped
N I	128765-500	04799533	4th clutch	.196	98-On	1	

OEI® Original Equipment Improvements

ILL	ALTO No.	REF No.	Description	Spec	Year	Qty	Notes
N I	128755	NA	Underdrive/Overdrive PowerPack®		98-On	1	
N I	128757	NA	2nd clutch PowerPack®		98-On	1	
N I	128758	NA	4th clutch PowerPack®		98-On	1	
N I	128985	SK-45RFE	VB Shift Kit®	Transgo®	98-On	1	

FILTERS

ILL	ALTO No.	REF No.	Description	Spec	Year	Qty	Notes
N I	128940	4800029AA	Filter - 2wd		98-On	1	
N I	128942	5013470AB	Filter - 4wd		98-On	1	
N I		5013470AC			98-On	1	
N I		4799507			98-On	1	
N I	128944	5179267AC	Filter - External spin on		98-On	1	

METAL CLAD SEALS

ILL	ALTO No.	REF No.	Description	Spec	Year	Qty	Notes
13A	128400	04617919	Front Pump		98-On	1	
N I	128405	4531216	Extension Housing - 2wd		98-On	1	
N I	128406	4167929	Adapter Housing - 4wd		98-On	1	

SEALING RINGS

ILL	ALTO No.	REF No.	Description	Spec	Year	Qty	Notes
KT	128600	NA	Sealing Ring Kit - 5M / 12T		98-On	1	
14A	128100	4799056	Reaction Shaft Support		98-On	5	SSP
N I	128101	4446544	Accumulator Pistons	Teflon	98-On	10	
15A	128102	4799539	Input Shaft	Teflon	98-On	2	

SNAP RINGS

ILL	ALTO No.	REF No.	Description	Spec	Year	Qty	Notes
NI	028252-074	1942064	Rear Clutch PP retainer - rear	.074	98-On	AR	

BUSHINGS

ILL	ALTO No.	REF No.	Description	Spec	Year	Qty	Notes
KT	128625	NL	Bushing Kit		98-On	1	

MOLDED PISTONS

ILL	ALTO No.	REF No.	Description	Spec	Year	Qty	Notes
KT	128670	NA	Piston Kit - 45RFE		98-04	1	2 pistons
KT	128670A	NA	Piston Kit - 545RFE		04-On	1	3 pistons
16B	128300	4799650	Bonded Piston - Underdrive		98-On	1	
17B	128301	4799652	Bonded Piston - Underdrive (balance)		98-On	1	

CHRYSLER

68RFE 6 Speed

2007-On

KITS

*Add Suffix SK for Super Kit

ILL	Description	Years	Friction Module	Steel Module	Overhaul Kit	Banner Kit	Master Kit
KT	Rebuilding Kit - with Molded Pistons	07-On	128752A	128753A	128802	128903LS	128903
KT	Rebuilding Kit - without Molded Pistons	07-On	128752A	128753A	128802X	128903XLS	128903X

KITS - HI-PERFORMANCE Red Eagle® with PowerPack®

ILL	Description	Years	Friction and Steel Module	Overhaul Kit	Banner Kit	Master Kit
KT	Rebuilding Kit - with Molded Pistons - 2nd and 4th Clutch PowerPacks®	07-On	128750AHP	128802	NA	128903HP
KT	Rebuilding Kit - without Molded Pistons - 2nd and 4th Clutch PowerPacks®	07-On	128750AHP	128802X	NA	128903XHP

FRICTION CLUTCHES

ILL	ALTO No.	REF No.	Description	Spec	Year	Qty	Notes
N I	128740C147	NA	Underdrive (1 sided) - internal spline	.057	07-On	5	Red - 32T - OD: 6.357" - PL
N I	128741A145	NA	Underdrive (1 sided) - external spline	.057	07-On	5	Red - 12T - ID: 5.400" - PL
N I	128741B145	NA	Underdrive (1 sided) - external spline	.057	07-On	5	G3 - 12T - ID: 5.400" - PL
N I	128740D145	NA	Underdrive (1 sided) - internal spline	.057	07-On	5	G3 - 32T - OD: 6.357" - PL
N I	128740C132	NA	Overdrive (1 sided) - internal spline	.052	07-On	6	Red - 32T - OD: 6.357" - SB
N I	128740D132	NA	Overdrive (1 sided) - internal spline	.052	07-On	6	G3 - 32T - OD: 6.357" - SB
N I	128741A132	NA	Overdrive (1 sided) - external spline	.052	07-On	6	Red - 12T - ID: 5.400" - SB
N I	128741B132	NA	Overdrive (1 sided) - external spline	.052	07-On	6	G3 - 12T - ID: 5.400" - SB
N I	128700B200	04799757	Reverse	.078	07-On	2	HEG - 32T - OD: 6.364" - PL
N I	128702A193	NA	2nd- PPK	.076	07-On	5	G3C - 40T - OD: 8.107" - SB
N I	128702-230	04799244	2nd	.090	07-On	3	HEG - 40T - OD: 8.107" - SB
N I	128704A200	NA	4th- PPK	.079	07-On	4	G3C - 24T - OD: 5.331" - SB
N I	128704-230	04799530	4th	.090	07-On	4	HEG - 24T - OD: 5.331" - SB
N I	128746A157	NA	Low / Reverse (1 sided) - internal spline	.062	07-On	7	Red - 48T - OD: 6.806" - PLNI
N I	128747A157	NA	Low / Reverse (1 sided) - external spline	.062	07-On	7	Red - 45T - ID: 5.870" - PLNI

STEEL CLUTCHES

ILL	ALTO No.	REF No.	Description	Spec	Year	Qty	Notes
N I	128701-170	04799105AB	Reverse	.068	07-On	2	12T - ID: 5.400"
N I	128703-323	04799243	2nd	.127	07-On	3	10T - ID: 6.771"
N I	128703-160	NA	2nd - PPK, Untreated	.063	07-On	5	10T - ID: 6.771"
N I	128705-180	NA	4th - PPK, Untreated	.071	07-On	5	20T - ID: 4.239"
N I	128705-250	04799529	4th	.099	07-On	4	20T - ID: 4.239"
N I	128765A	NA	4th- PP stepped- PPK	.196	07-On	1	20T - ID: 4.239"
N I	128761A	NA	Steel, Pressure Plate		07-On	1	
N I	128761B	NA	Steel, Pressure Plate		07-On	1	

TORQUE CONVERTER - FRICTION RINGS AND CLUTCHES

ILL	ALTO No.	REF No.	Description	Spec	Year	Qty	Notes
N I	128714	CH-CP-1	Torque Converter friction	.160	07-On	4	HEG - 35T - ID: 10.150"

OEI® Original Equipment Improvements

ILL	ALTO No.	REF No.	Description	Spec	Year	Qty	Notes
N I	128757A	NA	Powerpack 2nd Clutch		07-10	1	Kit ends in Middle 2010
N I	128758A	NA	Powerpack 4th Clutch		07-On	1	
N I	128985	SK-45RFE	VB Shift Kit®	Transgo®	98-On	1	

CHRYSLER

68RFE 6 Speed

2007-On

FILTERS

ILL	ALTO No.	REF No.	Description	Spec	Year	Qty	Notes
N I	128940	NA	Filter, 2WD		07-On	1	
N I	128942	NA	Filter, 4WD		07-On	1	

PISTONS

ILL	ALTO No.	REF No.	Description	Spec	Year	Qty	Notes
KT	128671	NA	Piston Kit		07-On	1	5 pistons
N I	128305A	NA	2nd Clutch- modified		07-On	1	
N I	128305AX	52119655AA	2nd Clutch- OE style		07-On	1	

CHRYSLER

AS 68RC 6 Speed, A465

2007-On

KITS

*Add Suffix SK for Super Kit

ILL	Description	Years	Friction Module	Steel Module	Overhaul Kit	Banner Kit	Master Kit
KT	Rebuilding Kit - AS 68RC only (with 1 Piston)	07-On	202752	202753	202800	202901LS	202901
KT	Rebuilding Kit - A465 (with 1 Piston)	07-On	202752A	202753	202800	202901ALS	202901A

KITS-HI-PERFORMANCE WITH POWERPACK®

ILL	Description	Years	Friction and Steel Module	Overhaul Kit	Banner Kit	Master Kit
KT	Rebuilding Kit with K1, K2, B1 PowerPack®	07-On	202750PWR	202800	NA	202901PWR

FRICTION CLUTCHES

ILL	ALTO No.	REF No.	Description	Spec	Year	Qty	Notes
N I	202700-205	NA	K1 Clutch	.081/2.05	07-On	6	HEG - 48T - OD: 5.810" - SB
N I	202702-205	NA	K2 Clutch - AS 68RC	.081/2.05	07-On	5	HEG - 60T - OD: 8.050" - SB
N I	202702A205	NA	K2 Clutch - A465	.081/2.05	07-On	5	HEG - 32T - OD: 8.050" - SB
N I	202704-205	NA	K3 Clutch	.081/2.05	07-On	5	HEG - 78T - OD: 8.050" - SB
N I	202706-205	NA	B1 Clutch	.081/2.05	07-On	5	HEG - 66T - OD: 7.920" - SB
N I	202708-168	NA	B2 Clutch	.066/1.68	07-On	8	HEG - 70T - OD: 7.950" - SB

FRICTION CLUTCHES - HI PERFORMANCE

ILL	ALTO No.	REF No.	Description	Spec	Year	Qty	Notes
N I	202702B165	NA	K2 Clutch- Powerpack®	.065/1.65	07-On	6	G3BK - 60T - OD: 8.068" - Blocked
N I	202704A165	NA	K3 Clutch- Powerpack®	.065/1.65	07-On	6	G3BK - 78T - OD: 8.050" - Blocked
N I	202706A165	NA	B1 Clutch- Powerpack®	.065/1.65	07-On	6	G3BK - 66T - OD: 7.935" - Blocked

STEEL CLUTCHES

ILL	ALTO No.	REF No.	Description	Spec	Year	Qty	Notes
N I	202701-244	NA	K1 Clutch	.096/2.44	07-On	6	20T - ID: 4.130"
N I	202703-244	NA	K2 Clutch	.096/2.44	07-On	5	20T - ID: 6.890"
N I	202703-244	NA	K3 Clutch	.096/2.44	07-On	5	20T - ID: 6.890"
N I	202707-282	NA	B1 Clutch	.111/2.82	07-On	4	16T - ID: 5.940"
N I	202709-279	NA	B2 Clutch	.110/2.79	07-On	7	16T - ID: 6.720"

STEEL CLUTCHES - HI PERFORMANCE

ILL	ALTO No.	REF No.	Description	Spec	Year	Qty	Notes
N I	202703-201	NA	K2, K3 Clutch- Powerpack® - thin	.079/2.01	07-On	12	20T - ID: 6.890"
N I	202703-180	NA	K2, K3 Clutch- Powerpack® - selective	.071/1.80	07-On	1	20T - ID: 6.890"
N I	202707-224	NA	B1 Clutch- Powerpack® - thin	.088/2.24	07-On	5	16T - ID: 5.940"

TORQUE CONVERTER - FRICTION RINGS AND CLUTCHES

ILL	ALTO No.	REF No.	Description	Spec	Year	Qty	Notes
KT	202759	NA	Repair Kit - Includes Friction, Steel, Pressure Plate		07-On	1	
N I	202714	AS-CP-1FK	Friction - Torque Converter	.100/2.54	07-On	3	Red - 36T - OD: 7.438" - SPR
N I	202715	AS-CP-2SK	Steel - Torque Converter	.071/1.8	07-On	3	16T - ID: 6.254"
N I	202760	NA	Pressure Plate - Torque Converter	.249/6.32	07-On	1	16T - ID: 6.254"

CHRYSLER

AS 68RC 6 Speed, A465

2007-On

OEI® Original Equipment Improvements- HI PERFORMANCE

ILL	ALTO No.	REF No.	Description	Spec	Year	Qty	Notes
N I	202756	NA	K2 Clutch Powerpack®		07-On	1	
N I	202757	NA	K3 Clutch Powerpack®		07-On	1	
N I	202758	NA	B1 Clutch Powerpack®		07-On	1	

FILTERS

ILL	ALTO No.	REF No.	Description	Spec	Year	Qty	Notes
N I	202940	68019688AA	Filter - AS 68RC		07-On	1	
N I	TBA	NA	Filter - A465			1	

CHRYSLER
AS69RC
2013-On

KITS

ILL	Description	Years	Friction Module	Steel Module	Overhaul Kit	Banner Kit	Master Kit
KT	Rebuilding Kit	13-On	202752B	202753B	202802	202903LS	202903

FRICTION CLUTCHES

ILL	ALTO No.	REF No.	Description	Spec	Year	Qty	Notes
N I	202720-205	NA	K1 Clutch	.080/2.03	13-On	7	HEG - 54T - OD: 5.970"- Keyhole
N I	202722-205	NA	K2 Clutch	.080/2.03	13-On	6	HEG - 56T - OD: 8.060"- Blocked
N I	202724-225	NA	K3 Clutch	.088/2.24	13-On	5	HEG - 78T - OD: 8.060"- Blocked
N I	202726-220	NA	B1 Clutch	.087/2.21	13-On	5	HEG - 66T - OD: 8.000"- Keyhole
N I	202728-205	NA	B2 Clutch	.080/2.03	13-On	8	HEG - 78T - OD: 8.400"- Seg

STEEL CLUTCHES

ILL	ALTO No.	REF No.	Description	Spec	Year	Qty	Notes
N I	202721-240	NA	K1 Clutch	.095/2.41	13-On	7	20T - ID: 4.720"
N I	202723-240	NA	K2, K3 Clutch	.095/2.41	13-On	11	20T - ID: 7.085"
N I	202727-280	NA	B1 Clutch	.111/2.82	13-On	4	19T - ID: 6.130"
N I	202729-280	NA	B2 Clutch	.110/2.79	13-On	7	19T - ID: 7.225"

TORQUE CONVERTER-FRICTION RINGS AND CLUTCHES

ILL	ALTO No.	REF No.	Description	Spec	Year	Qty	Notes
N I	202716	NA	Friction Torque Converter	.100/2.54	13-On	3	HEG - 42T - OD: 8.550" - SPR
N I	202717	NA	Steel Torque Converter	.071/1.8	13-On	3	16T - ID: 7.340"

FILTERS

ILL	ALTO No.	REF No.	Description	Spec	Year	Qty	Notes
N I	202942	68224232AA	Filter		13-On	1	

CHRYSLER
6F24 POWERTECH
2013-On

KITS

ILL	Description	Years	Friction Module	Steel Module	Overhaul Kit	Banner Kit	Master Kit
KT	Rebuilding Kit with Pistons	13-On	214752	214753A	214802	214903LS	214903
KT	Rebuilding Kit without Pistons	13-On	214752	214753A	214802X	214903XLS	214903X

FRICTION CLUTCHES

ILL	ALTO No.	REF No.	Description	Spec	Year	Qty	Notes
N I	214700-183	45670-3B600	2-6 Brake	.072/1.83	13-On	4	HEG - 36T - OD: 6.970"- WF
N I	214702-208	45425-3B600	3-5-Reverse (1 sided) - internal spline	.083/2.08	13-On	4	HEG - 30T - OD: 5.262" - SB
N I	214703A210	45425-3B600	3-5-Reverse (1 sided) - external spline	.083/2.11	13-On	3	HEG - 27T - ID: 4.575" - SB
N I	214703A250	45425-3B600	3-5-Reverse (1 sided) - external spline	.098/2.49	13-On	1	HEG - 27T - ID: 4.575" - SB
N I	214704-170	45525-3B800	Overdrive	.067/1.7	13-On	5	HEG - 36T - OD: 6.014" - SB
N I	214706-173	45625-3B601	Underdrive	.068/1.73	13-On	3	HEG - 36T - OD: 6.575" - PLNI
N I	214708-173	45641-3B600	Low/Reverse	.068/1.73	13-On	5	HEG - 36T - OD: 6.947" - SB

STEEL CLUTCHES

ILL	ALTO No.	REF No.	Description	Spec	Year	Qty	Notes
N I	214701-210	45670-3B600	2-6 Brake	.083/2.11	13-On	3	7T - ID: 6.230"
N I	214701-230	45670-3B600	2-6 Brake	.091/2.31	13-On	1	7T - ID: 6.230"
N I	212705-210	45525-3B800	Overdrive	.083/2.11	13-On	4	27T - ID: 5.281"
N I	212705-230	45525-26000	Overdrive Bottom Apply	.091/2.31	13-On	1	27T - ID: 5.285"
N I	214707-178	45625-3B601	Underdrive	.070/1.78	13-On	3	7T - ID: 5.837"
N I	214709-102	45641-3B600	Low/Reverse	.040/1.02	13-On	5	15T - ID: 6.291"
N I	214709-150	45641-3B600	Low/Reverse	.059/1.50	13-On	1	15T - ID: 6.291"

MOLDED PISTONS

ILL	ALTO No.	REF No.	Description	Spec	Year	Qty	Notes
KT	214670	NA	Piston Kit		13-On	1	2 pistons
N I	214300	NA	3-5-Reverse Retainer (OEM)		13-On	1	
N I	212301	NA	Overdrive Retainer (OEM)		13-On	1	

CHRYSLER 948TE

ZF9HP48

2013-On

KITS

ILL	Description	Years	Friction Module	Steel Module	Overhaul Kit	Banner Kit	Master Kit
KT	Rebuilding Kit with Pistons	13-3/15	223752	223753	223800	223901LS	223901
KT	Rebuilding Kit without Pistons	13-3/15	223752	223753	223800X	223901XLS	223901X
KT	Rebuilding Kit with Pistons	3/15-On	223752A	223753A	223800	223901ALS	223901A
KT	Rebuilding Kit without Pistons	3/15-On	223752A	223753A	223800X	223901AXLS	223901AX

FRICTION CLUTCHES

ILL	ALTO No.	REF No.	Description	Spec	Year	Qty	Notes
N I	223700-224	NA	B Clutch	.088/2.24	13-3/15	4	SAS - 64T - ID: 5.520" - SEG
N I	223700A226	NA	B Clutch	.089/2.26	3/15-On	5	SAS - 30T - OD: 6.420" - SEG
N I	223702-224	NA	C Clutch	.088/2.24	13-On	4	SAS - 48T - OD: 8.180" - SEG
N I	223704-185	NA	D Clutch	.073/1.85	13-On	4	SAS - 40T - OD: 8.470" - SEG
N I	223706-180	NA	E Clutch	.071/1.88	13-On	5	SAS - 36T - OD: 6.370" - SEG

STEEL CLUTCHES

ILL	ALTO No.	REF No.	Description	Spec	Year	Qty	Notes
N I	223701A305	NA	B Clutch	.120/3.05	13-3/15	5	30T - OD: 6.425"
N I	223701-272	NA	B Clutch	.107/2.72	3/15-On	5	64T - ID: 5.520"
N I	223703-300	NA	C Clutch	.118/3.00	13-On	4	33T - ID: 7.317"
N I	223705-300	NA	D Clutch	.118/3.00	13-On	4	36T - ID: 8.014"
N I	223707-213	NA	E Clutch	.084/2.13	13-On	5	36T - ID: 5.788"

PRESSURE PLATES

ILL	ALTO No.	REF No.	Description	Spec	Year	Qty	Notes
N I	223764-330	NA	D Clutch - 9HP48	.129/3.28	13-On	1	36T - ID: 8.014"
N I	223764-360	NA	D Clutch - 948TE	.142/3.60	13-On	1	36T - ID: 8.014"

BUSHINGS

ILL	ALTO No.	REF No.	Description	Spec	Year	Qty	Notes
KT	223625B	NA	Bushing Kit		13-On	1	Contains 4 Pistons
NI	223200	NA	Front Stator to Input Shaft		13-On	1	
NI	223201A	NA	Front E Clutch to Input Shaft		13-On	1	
NI	223201B	NA	Rear E Clutch to Input Shaft		13-On	1	
NI	223202	NA	F Clutch Ring Gear to Input Shaft		13-On	1	

PISTONS

ILL	ALTO No.	REF No.	Description	Spec	Year	Qty	Notes
KT	223670	NA	Piston Kit		13-On	1	
N I	223300	NA	E Clutch Apply		13-On	1	
N I	223301	NA	E Clutch Inner Drum		13-On	1	

AISIN WARNER / BORG WARNER

T35, TA, TB, TC, T37 (UK) 1962-On
T65, 66 (UK). BW40/51 1971-On

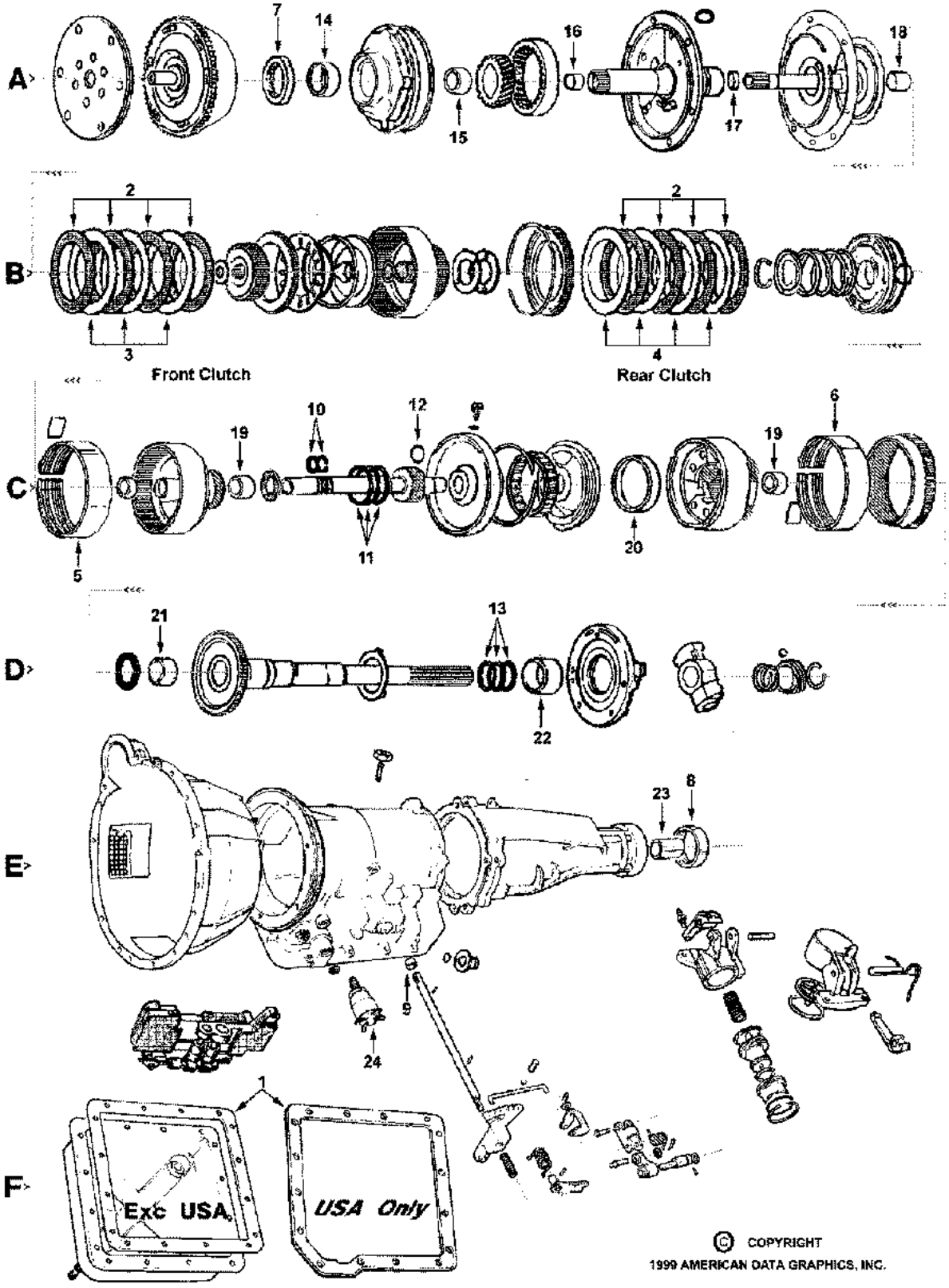

AISIN WARNER / BORG WARNER

T35, TA, TB, TC, T37 (UK) 1962-On
T65, 66 (UK). BW40/51 1971-On

KITS

*Add Suffix SK for Super Kit

ILL	Description	Years	Friction Module	Steel Module	Overhaul Kit	Banner Kit	Master Kit
KT	Rebuilding Kit - T35 USA models	62-71	029752	029753	029800	029901LS	029901
KT	Rebuilding Kit - T35 Non USA models	63-On	029752	029753	029802	029903LS	029903
KT	Rebuilding Kit - T65 / T66	71-On	029752	029753	029804	029905LS	029905
KT	Rebuilding Kit - T35TB / T37	81-93	029752	029753	029806	029909LS	029909

MISCELLANEOUS GASKETS & KIT COMPONENTS

ILL	ALTO No.	REF No.	Description	Spec	Year	Qty	Notes
1F	029816	3164825	Gasket, Oil pan - T35 USA models	Cork/Rub	62-71	1	
1F	029820	211E-7A191A	Gasket, Oil pan - T35 Non USA models	Cork/Rub	63-On	1	
1F	029822	0565-141008	Gasket, Oil pan - T65/66	Cork/Rub	71-On	1	

FRICTION CLUTCHES

ILL	ALTO No.	REF No.	Description	Spec	Year	Qty	Notes
2B	029712	Various	Front & Rear	.061	62-On	4-5	Tan - 36T - OD: 4.248" - PL
2B	029712SM	Various	Front & Rear	.061	62-On	4-5	Tan - 36T - OD: 4.248" - SM
2B	029710	Various	Front & Rear	.061	62-On	4-5	HEG - 36T - OD: 4.248" - PL
2B	029710SM	Various	Front & Rear	.061	62-On	4-5	HEG - 36T - OD: 4.248" - SM
2B	029712BR	Various	Front & Rear - special Bronze	.061	62-On	4-5	Brz - 36T - OD: 4.248" - SB

FRICTION CLUTCHES - HI-PERFORMANCE - Red Eagle®

ILL	ALTO No.	REF No.	Description	Spec	Year	Qty	Notes
2B	029740	NA	Front & Rear	.061	62-On	4-5	Red - 36T - OD: 4.247" - SM

STEEL CLUTCHES

ILL	ALTO No.	REF No.	Description	Spec	Year	Qty	Notes
3B	029701	Various	Front	.068	62-On	4	44T - ID: 3.134"
4B	029701	Various	Rear	.068	62-On	5	44T - ID: 3.134"
4B	029703	Various	Rear - T35 dish	.067	62-On	5	44T - ID: 3.125"
3B	029701-200	Various	Front & Rear - Selective	.078	62-On	AR	44T - ID: 3.134"
3B	029701-230	Various	Front & Rear - Selective	.091	62-On	AR	44T - ID: 3.134"
3B	029711	Various	Front & Rear - Selective	.053	62-On	AR	44T - ID: 3.134"

STEEL CLUTCHES - HI-PERFORMANCE - Kolene®

ILL	ALTO No.	REF No.	Description	Spec	Year	Qty	Notes
3B	029701K	NA	Front & Rear	.068	62-On	4-5	Kol - 44T - ID: 3.134"

BANDS

ILL	ALTO No.	REF No.	Description	Spec	Year	Qty	Notes
5C	029952	Various	Front - Rigid 1.53" wide	Tan	62-On	1	
5C	029976	Various	Front - Flex	Tan	62-On	1	
6C	029956	Various	Rear - Rigid 2.13" wide	Tan	62-On	1	

FILTERS

ILL	ALTO No.	REF No.	Description	Spec	Year	Qty	Notes
N I	029940	3170356	Filter - Front with extended shroud		62-On	1	
N I	029944	NA	Filter - Front with extended shroud Brass		62-On	1	
N I	029942	NA	Filter - Rear (T35)		62-On	1	

AISIN WARNER / BORG WARNER

T35, TA, TB, TC, T37 (UK) 1962-On
T65, 66 (UK). BW40/51 1971-On

METAL CLAD SEALS

ILL	ALTO No.	REF No.	Description	Spec	Year	Qty	Notes
7A	029400	Various	Front Pump - Thick type		62-On	1	
7A	029406	Various	Front Pump - Thin type		62-On	1	
8E	031401	3155168	Extension Housing - T35 Various USA models	2.500	62-On	1	
8E	032402	Various	Extension Housing - T35 Various USA models	2.382	62-On	1	
8E	029404	D2RY-7052B	Extension Housing - T35 Various	1.718	62-On	1	
8E	029405	BWA00011	Extension Housing - T35 Jaguar	1.950	62-On	1	
8E	029407	235728-3	Extension Housing - T65 Jaguar & Rover	1.950	62-On	1	
8E	029409	04-65-0-440-002H	Extension Housing - T65 BMW	2.430	62-On	1	
9E	029403	Various	Manual Lever		62-On	1	

SEALING RINGS

ILL	ALTO No.	REF No.	Description	Spec	Year	Qty	Notes
KT	029600	G742B	Sealing Ring Kit - 10M / 1T (BW35/BW65)		62-On	1	
10C	029100	3165007	Primary Sun Gear (Front) with small shaft	Metal	62-E69	2	
10C	023104	3150877	Primary Sun Gear (Front) with large shaft	Metal	L69-On	2	
11C	029104	3164858	Rear Clutch drum	Metal	62-On	3	
12C	029105	3176130	Primary Sun Gear (Rear)	Teflon	62-On	1	
12C	029101	3165008	Primary Sun Gear (Rear)	Metal	62-On	opt.	
13D	027109	3165806	Output Shaft	Metal	62-On	3	

BUSHINGS

ILL	ALTO No.	REF No.	Description	Spec	Year	Qty	Notes
KT	029625	NA	Bushing Kit		62-On	1	
KT	029630	NA	Short Bushing Kit		62-On	1	
14A	029205	3205306	Front Pump Body		62-On	1	
15A	029208	3205308	Front Pump Drive Gear		62-On	1	
16A	029211	3205309	Stator Support Front (22 & 23 spline)		62-On	1	
16A	029211A	NA	Stator Support Front (26 spline)		69-On	1	
17A	029209	3205307	Stator Support Rear		62-On	1	
18A	029204	3205301	Input Shaft		62-On	1	
19C	029207	3205303	Sun Gear & Rear Clutch drum		62-On	2	
20C	029206	3205304	Planetary Support		62-On	1	
21D	029203	3205305	Output Shaft		62-On	1	
22D	029200	3203639	Case		62-On	1	
23E	029201	3202124	Extension Housing - closed drive		62-On	1	
23E	023224	3203640	Extension Housing - open drive		62-On	1	
23E	041207	NA	Extension Housing - 2.500" OD		62-On	1	

MODULATORS

ILL	ALTO No.	REF No.	Description	Spec	Year	Qty	Notes
24E	033504	4485870	Modulator		62-On	1	

AISIN WARNER / BORG WARNER

AW55 / BW55

1974-81

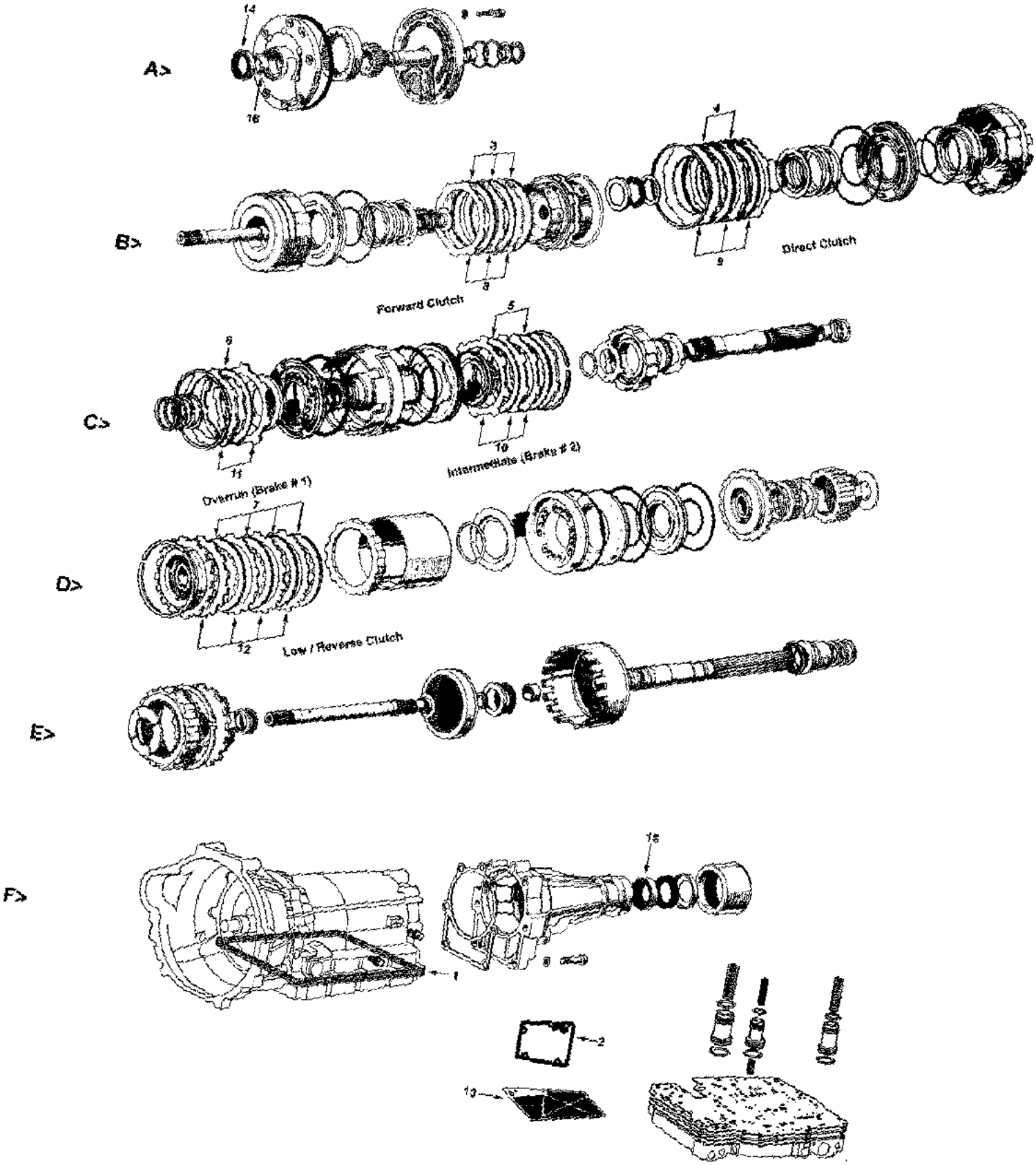

AISIN WARNER / BORG WARNER

AW55 / BW55

1974-81

KITS

*Add Suffix SK for Super Kit

ILL	Description	Years	Friction Module	Steel Module	Overhaul Kit	Banner Kit	Master Kit
KT	Rebuilding Kit	74-81	044752	044753	044808	044901ALS	044901A

MISCELLANEOUS GASKETS & KIT COMPONENTS

ILL	ALTO No.	REF No.	Description	Spec	Year	Qty	Notes
1F	044816	1239683-4	Gasket, Oil Pan	Cork/Rub	74-81	1	
2F	044004	1233337-3	Gasket, Filter		74-81	1	

FRICTION CLUTCHES

ILL	ALTO No.	REF No.	Description	Spec	Year	Qty	Notes
6C	044700A230	1377647-1	Forward, Direct, Intermediate, Overrun	.091	74-81	AR	HEG - 24T - OD: 5.000" - SM
7C	044702A230	6843255-8	Low / Reverse	.091	74-81	4-5	HEG - 16T - OD: 5.00" - SM
6C	044700W230	1377647-1	* Waved Friction - replaces 044700		74-81	AR	Wave

FRICTION CLUTCHES - HI-PERFORMANCE - Red Eagle®

ILL	ALTO No.	REF No.	Description	Spec	Year	Qty	Notes
3B	044740	NA	All except Low / Reverse	.091	74-81	AR	Red - 24T - OD: 5.000" - SM
7C	044742	NA	Low / Reverse	.091	74-81	4-5	Red - 16T - OD: 5.000" - SM

FRICTION CLUTCHES - HI-PERFORMANCE - UNIT PACKS (ONE Rebuild)

ILL	ALTO No.	REF No.	Description	Spec	Year	Qty	Notes
KT	044740UP4	NA	UNIT PACK - All except Low / Reverse	.091	74-81	1	4 Red Eagle® Frictions
KT	044742UP5	NA	UNIT PACK - Low / Reverse	.091	74-81	1	5 Red Eagle® Frictions

STEEL CLUTCHES

ILL	ALTO No.	REF No.	Description	Spec	Year	Qty	Notes
8B	044701	1233029-6	Forward	.071	74-81	3-4	8T - ID: 4.012"
9B	044701	1233029-6	Direct	.071	74-81	3	8T - ID: 4.012"
10C	044705	1340039-5	Intermediate (Brake # 2)	.071	74-81	3	8T - ID: 4.012"
11C	044705	1340039-5	Overrun (Brake # 1)	.071	74-81	1	8T - ID: 4.012"
12C	044703	6814809-7B	Low / Reverse	.071	74-81	4	15T - ID: 4.012"

STEEL CLUTCHES - HI-PERFORMANCE - Kolene®

ILL	ALTO No.	REF No.	Description	Spec	Year	Qty	Notes
10C	044705K180	NA	Intermediate or Overrun	.071	74-81	3/1	Kol - 8T - ID: 4.012"
12C	044703K180	NA	Low / Reverse	.071	74-81	4	Kol - 15T - ID: 4.012"

STEEL CLUTCHES - HI-PERFORMANCE - UNIT PACKS (ONE Rebuild)

ILL	ALTO No.	REF No.	Description	Spec	Year	Qty	Notes
KT	044701KUP4	NA	UNIT PACK - Forward or Direct	.071	74-81	1	4 Kolene® Steels
KT	044705KUP4	NA	UNIT PACK - Intermediate or Overrun	.071	74-81	1	4 Kolene® Steels
KT	044703KUP4	NA	UNIT PACK - Low / Reverse	.071	74-81	1	4 Kolene® Steels

AISIN WARNER / BORG WARNER

AW55 / BW55

1974-81

FILTERS

ILL	ALTO No.	REF No.	Description	Spec	Year	Qty	Notes
13F	044940	35303-22020	Filter	.071	74-81	1	

METAL CLAD SEALS

ILL	ALTO No.	REF No.	Description	Spec	Year	Qty	Notes
14A	044400	1340096-5	Front Pump		74-81	1	
15F	044415	235728-3	Extension Housing		74-81	1	
N I	044410	1233064-3	Manual Lever		74-81	1	

SEALING RINGS

ILL	ALTO No.	REF No.	Description	Spec	Year	Qty	Notes
KT	044600A	D415	Kit		74-81	1	

BUSHINGS

ILL	ALTO No.	REF No.	Description	Spec	Year	Qty	Notes
KT	044625	NA	Bushing Kit		74-81	1	
16A	044200	NA	Front Pump		74-81	1	

AISIN WARNER / BORG WARNER

AW70, 71, 72 4 Speed

1981-97

A>

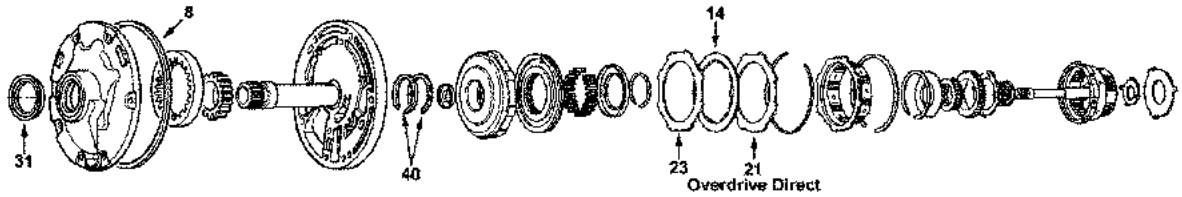

B>

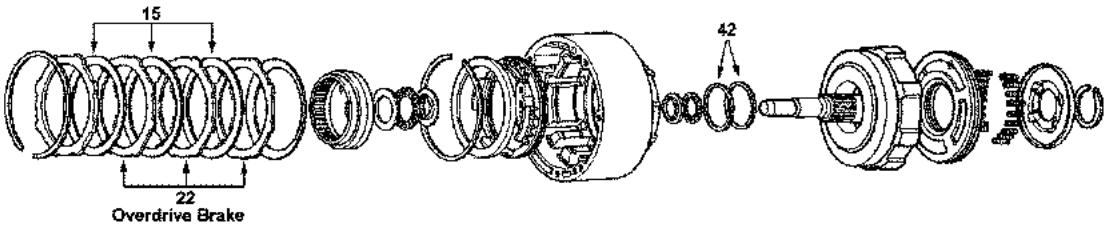

C>

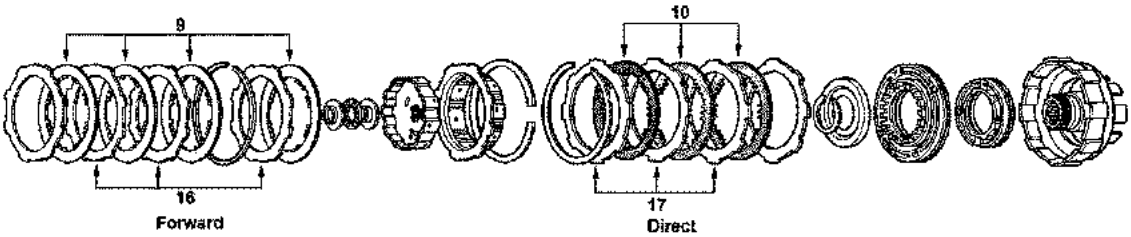

D>

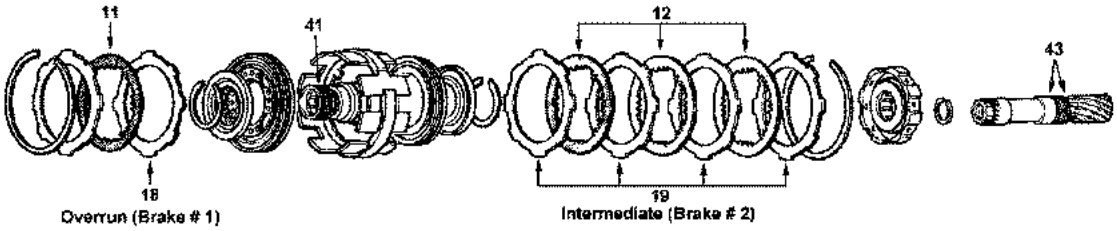

E>

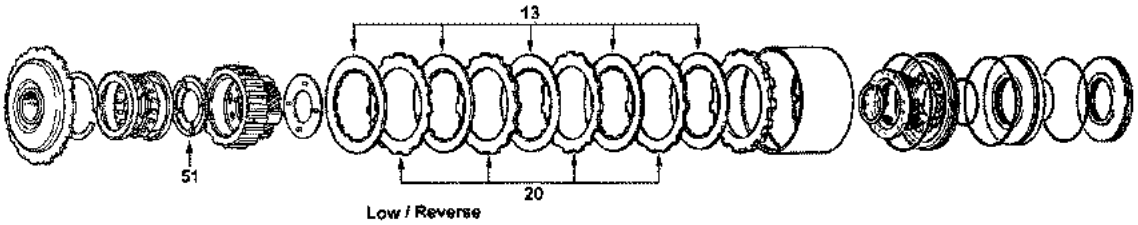

F>

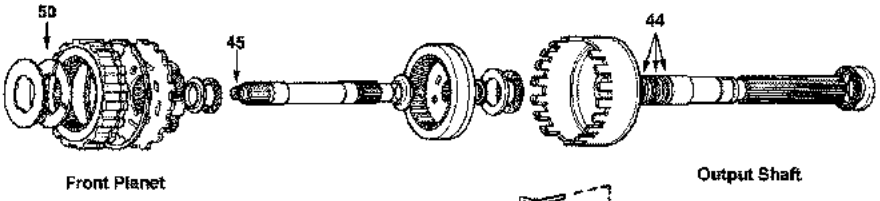

G>

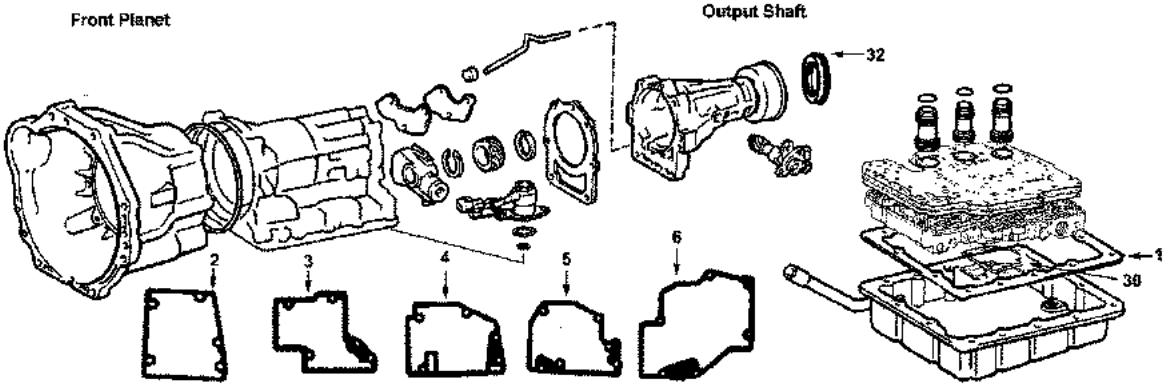

AISIN WARNER / BORG WARNER

AW70, 71, 72 4 Speed

1981-97

KITS

*Add Suffix SK for Super Kit

ILL	Description	Years	Friction Module	Steel Module	Overhaul Kit	Banner Kit	Master Kit
KT	Rebuilding Kit - AW70 / AW71	81-97	044752F	044753F	044810	044911LS	044911

MISCELLANEOUS GASKETS & KIT COMPONENTS

ILL	ALTO No.	REF No.	Description	Spec	Year	Qty	Notes
1G	044816	1233383-7	Gasket, Oil Pan	Cork/Rub	81-97	1	
2F	044004B	3520329-8	Gasket, Filter - AW70 / AW71		81-97	1	
3F	044004D	3520330-6	Gasket, Filter - AW72		81-97	1	

FRICTION CLUTCHES

ILL	ALTO No.	REF No.	Description	Spec	Year	Qty	Notes
4C	044710	3520341-3	Forward - some AW71	.080	81-97	3-4	Tan - 24T - OD: 5.000" - SM
7B	065702	1239992-9	Overdrive Brake	.067	81-97	3	HEG - 33T - OD: 5.589" - SM
9D	044710	3520341-3	Intermediate (Brake # 2) - some AW71	.080	81-97	3	Tan - 24T - OD: 5.000" - SM
4C	044700A230	1340040-3	Forward, Direct, Intermediate, Overrun	.091	81-97	AR	HEG - 24T - OD: 5.000" - SM
10E	044702A230	6814810-5	Low / Reverse	.091	81-97	4-5	HEG - 16T - OD: 5.000" - SM
4C	044700W230	1340040-3	* Waved Friction - replaces 044700		81-97	AR	Wave

FRICTION CLUTCHES - HI-PERFORMANCE - Red Eagle®

ILL	ALTO No.	REF No.	Description	Spec	Year	Qty	Notes
4C	044740	NA	Various	.091	81-97	AR	Red - 24T - OD: 5.000" - SM
10E	044742	NA	Low / Reverse	.091	81-97	4-5	Red - 16T - OD: 5.000" - SM

FRICTION CLUTCHES - HI-PERFORMANCE - UNIT PACKS (ONE Rebuild)

ILL	ALTO No.	REF No.	Description	Spec	Year	Qty	Notes
KT	044740UP4	NA	UNIT PACK - Various	.091	81-97	1	4 Red Eagle® Frictions
KT	044742UP5	NA	UNIT PACK - Various	.091	81-97	1	5 Red Eagle® Frictions

STEEL CLUTCHES

ILL	ALTO No.	REF No.	Description	Spec	Year	Qty	Notes
11C	044701	1233029-6	Forward	.071	81-97	3-4	8T - ID: 4.012"
11C	044701-140	1340057-7	Forward - some AW71	.055	81-97	3-4	8T - ID: 4.012"
11C	044711	1239723-8	Forward - AW72	.079	90-97	3-4	8T - ID: 4.012"
12C	044701	1233029-6	Direct	.071	81-88	3	8T - ID: 4.012"
12C	044711	1239723-8	Direct	.079	89-97	3	8T - ID: 4.012"
13A	044701	1233029-6	Overdrive Direct - AW70	.071	81-97	1	8T - ID: 4.012"
13A	044711	1239723-8	Overdrive Direct - AW71	.079	88-97	1	8T - ID: 4.012"
13A	044767	3502188-0	Overdrive Direct (dish) - AW72	.055	90-97	1	8T - ID: 4.012"
14B	044705	1340028-8	Overdrive Brake (long tooth)	.071	81-97	4	8T - ID: 4.012"
14B	044707	1239738-6	Overdrive Brake	.079	88-97	3	7T - ID: 4.578"
15D	044705	1340028-8	Overrun (Brake # 1)	.071	81-97	1	8T - ID: 4.012"
16D	044725	NA	Intermediate (Brake # 2)	.091	81-97	3	8T - ID: 4.012"
17E	044703	6814809-7	Low / Reverse	.071	81-97	4	15T - ID: 4.012"

AISIN WARNER / BORG WARNER

AW70, 71, 72 4 Speed

1981-97

STEEL CLUTCHES - HI-PERFORMANCE - Kolene®

ILL	ALTO No.	REF No.	Description	Spec	Year	Qty	Notes
14B	044705K180	NA	Various (long tooth)	.071	81-97	AR	Kol - 8T - ID: 4.012"
17E	044703K180	NA	Low / Reverse	.071	81-97	4	Kol - 15T - ID: 4.012"

STEEL CLUTCHES - HI-PERFORMANCE - UNIT PACKS (ONE Rebuild)

ILL	ALTO No.	REF No.	Description	Spec	Year	Qty	Notes
KT	044701KUP4	NA	UNIT PACK - Various	.071	81-97	1	4 Kolene® Steels
KT	044705KUP4	NA	UNIT PACK - Various (long tooth)	.071	81-97	1	4 Kolene® Steels
KT	044703KUP4	NA	UNIT PACK - Low / Reverse	.071	81-97	1	4 Kolene® Steels

FILTERS

ILL	ALTO No.	REF No.	Description	Spec	Year	Qty	Notes
18G	044946	1239829-3	Filter - AW70 / AW71		81-97	1	
18G	044948	NA	Filter - AW72		81-97	1	

METAL CLAD SEALS

ILL	ALTO No.	REF No.	Description	Spec	Year	Qty	Notes
19A	044400	1340096-5	Front Pump		81-97	1	
20G	044408	235728-3	Extension Housing - AW70 / AW72		79-97	1	
20G	TBA	3549226-3	Extension Housing - AW71		92-97	1	
N I	044410	3549669-4	Manual Lever		81-97	1-2	

SEALING RINGS

ILL	ALTO No.	REF No.	Description	Spec	Year	Qty	Notes
KT	044602	NA	Sealing Ring Kit		81-97	1	
21A	044111A	3549632-2	Front Pump Stator	Teflon	81-97	2	
22B	044111A	3549632-2	Overdrive Stator	Teflon	81-97	2	
N I	044111A	3549632-2	Center Support	Teflon	81-97	3	
23D	044103	1239534-9	Sun Gear - AW70	Metal	81-97	2	
23D	044106	1239770-9	Sun Gear - AW71 / AW72	Metal	81-97	2	
24F	044104	1233102-1	Output Shaft - AW70 / AW71	Metal	81-97	3	
24F	044108	NA	Output Shaft - AW72	Metal	81-97	3	
25F	044107	1239780-8	Intemerdiate Shaft	Teflon	81-97	1	

BUSHINGS

ILL	ALTO No.	REF No.	Description	Spec	Year	Qty	Notes
KT	044625	NA	Bushing Kit		81-97	1	
N I	044200	NA	Front Pump body		81-97	1	

AISIN WARNER / BORG WARNER

AW50-40LE, AW50-41LE 1989-On
AW50-42LE, LM 1999-On

KITS

*Add Suffix SK for Super Kit

ILL	Description	Years	Friction and Steel Module	Friction Module	Steel Module	Overhaul Kit	Banner Kit	Master Kit
KT	Rebuilding Kit - LE	89-E97	NA	110752	110753	110800	110901LS	110901
KT	Rebuilding Kit - LE	L97-99	NA	110752	110753	110802	110903LS	110903
KT	Rebuilding Kit - LE	99-On	NA	110752A	110753A	110802	110903ALS	110903A
KT	Rebuilding Kit - LE 2.5L KIA	00-On	110750D	NA	NA	110802	NA	110903B
KT	Rebuilding Kit - LM	99-On	NA	110752C	110753C	110802	110905LS	110905
KT	Rebuilding Kit - LN	99-On	NA	110752E	110753E	NA	NA	NA

FRICTION CLUTCHES

ILL	ALTO No.	REF No.	Description	Spec	Year	Qty	Notes
N I	110700	90542422	Direct (C2)	.067	89-98	2-4	HEG - 34T - OD: 4.260" - SM
N I	110700A170	NA	Direct (C2)	.067	99-On	4	HEG - 34T - OD:4.482" - SM
N I	110700	90542422	Coast (B1)	.067	89-On	3-4	HEG - 34T - OD: 4.260" - SM
N I	110700	90542422	Underdrive (C3) - LE	.067	89-On	3-4	HEG - 34T - OD: 4.260" - SM
N I	110700A170	NA	Underdrive (C3) - LM	.067	99-On	3-4	HEG - 34T - OD:4.482" - SM
N I	110702	90542936	Forward (C1)	.067	89-On	4	Tan - 46T - OD: 5.374" - SM
N I	110704	90348808	Low / Reverse (B3)	.067	89-On	5-6	HEG - 33T - OD: 6.302" - SM
N I	110704A160	NA	2nd Brake (B2) - LE	.067	99-On	5-6	HEG - 40T - OD: 6.302" - SM
N I	110704A190	NA	2nd Brake (B2) - LM	.075	99-On	4	HEG - 40T - OD: 6.302" - SM
N I	110706	90542947	2nd Brake (B2)	.067	89-98	3	HEG - 33T - OD: 6.302" - PL

STEEL CLUTCHES

ILL	ALTO No.	REF No.	Description	Spec	Year	Qty	Notes
N I	110701	90348774	Direct (C2)	.071	89-98	4	12T - ID: 3.582"
N I	110701A180	NA	Direct (C2)	.071	99-On	4	18T - ID: 3.582"
N I	110709	90348787	Coast (B1)	.071	89-On	2-3	8T - ID: 3.582"
N I	110709	90348787	Underdrive (C3) - LE	.071	89-98	3-4	8T - ID: 3.582"
N I	110709A250	NA	Underdrive (C3) - LE, LM	.098	99-On	3	18T - ID: 3.582"
N I	110703	90348778	Forward (C1)	.071	89-On	4	12T - ID: 4.491"
N I	110703-195	90542937	Forward (C1) - selective	.077	89-On	AR	12T - ID: 4.491"
N I	110705	90348807	Low / Reverse (B3)	.071	89-On	5	15T - ID: 5.661"
N I	110707	90348795	2nd Brake (B2) - LE	.098	89-98	2	10T - ID: 5.661"
N I	110707-180	NA	2nd Brake (B2) - LE selective	.071	89-98	AR	10T - ID: 5.661"
N I	110707B250	NA	2nd Brake (B2) - LE	.098	99-On	4	10T - ID: 5.538"
N I	110707B180	NA	2nd Brake (B2) - LM	.071	99-On	4	10T - ID: 5.538"
N I	110711-150	NA	Transfer Case	.059	89-On	AR	66T - ID: 5.220"
N I	159705-180	NA	Low / Reverse (B3) - LN	.071	99-On	11	13T - ID: 5.657"

PRESSURE PLATES

ILL	ALTO No.	REF No.	Description	Spec	Year	Qty	Notes
N I	TBA	0711756	Forward (C1)	.142	89-On	1	
N I	110703-380	0711757	Forward (C1)	.150	89-On	1	12T - ID: 4.491"
N I	TBA	0711758	Forward (C1)	.158	89-On	1	
N I	110765-380	90348809	Low / Reverse (B3)	.150	89-On	2	15T

BANDS

ILL	ALTO No.	REF No.	Description	Spec	Year	Qty	Notes
N I	110950	90348844	Band - B3		89-On	1	

AISIN WARNER / BORG WARNER

AW50-40LE, AW50-41LE 1989-On
AW50-42LE, LM 1999-On

FILTERS

ILL	ALTO No.	REF No.	Description	Spec	Year	Qty	Notes
N I	110940	90348728	Filter - 50-40LE 3 speed		89-On	1	
N I	110940A	30681088	Filter - 50-42LE		97-On	1	

METAL CLAD SEALS

ILL	ALTO No.	REF No.	Description	Spec	Year	Qty	Notes
N I	110400	90348749	Front Pump		89-On	1	
N I	110425	90348718	Axle - with flange (Opel)		89-On	1	
N I	110426	6843112-1	Axle - without flange (Volvo)		89-On	1	
N I	044410	NA	Manual Lever		89-On	1	

SEALING RINGS

ILL	ALTO No.	REF No.	Description	Spec	Year	Qty	Notes
KT	110600	NA	Sealing Ring Kit		89-On	1	16 rings

ELECTRONIC CONTROL COMPONENTS

ILL	ALTO No.	REF No.	Description	Spec	Year	Qty	Notes
N I	110501	6843784	Solenoid, Lock-up		89-On	1	
N I	110502	6843783	Solenoid, A-Shift		89-On	1	green connectors
		504031002N					
N I	110503	93741832	Solenoid, A-Shift		89-On	1	brown connectors

AISIN WARNER / BORG WARNER

AW55-50SN 1999-On, AW55-51SN 2005-On
AF33-5, RE5F22A

KITS

*Add Suffix SK for Super Kit

ILL	Description	Years	Friction Module	Steel Module	Overhaul Kit	Banner Kit	Master Kit
KT	Rebuilding Kit	99-On	159752	159753	159800	159901LS	159901
KT	Rebuilding Kit	05-On	159752A	159753	159800	159901ALS	159901A

FRICTION CLUTCHES

ILL	ALTO No.	REF No.	Description	Spec	Year	Qty	Notes
N I	110700	90542422	B1 - Coast Brake AW55-50SN	.067	99-On	3	HEG - 34T - OD: 4.260" - SM
N I	110700B175	NA	B1 - Coast Brake AW55-51SN	.068	05-On	3	HEG - 34T - OD: 4.254" - SB
N I	110704A160	NA	B2 - 2nd Brake AW55-50SN	.067	99-On	4	HEG - 40T - OD: 6.302" - SM
N I	110704A190	NA	B2 - 2nd Brake AW55-51SN	.076	05-On	4	HEG - 40T - OD: 6.302" - SM
N I	110704	90348808	B3 - Lo/Rev AW55-50SN	.067	99-On	4-5	HEG - 33T - OD: 6.302" - SM
N I	110706	90348796	B3 - Lo/Rev AW55-51SN	.067	05-On	5	HEG - 33T - OD: 6.302" - PL
N I	110700B175	NA	C2 - Direct AW55-50SN	.068	99-On	4	HEG - 34T - OD: 4.254" - SB
N I	110700B150	24228586	C2 - Direct AW55-51SN	.059	05-On	4	HEG - 34T - OD: 4.254" - SB
N I	159702-175	NA	C1 - Forward	.068	99-On	4	HEG - 49T - OD: 5.375" - SB
N I	110700A170	NA	C3 - Underdrive AW55-50SN	.067	99-On	4	HEG - 34T - OD:4.482" - SM
N I	110700A150	NA	C3 - Underdrive AW55-51SN	.059	05-On	4	HEG - 34T - OD:4.482" - SM
N I	159712-175	NA	B4 - 5th Brake	.068	99-On	6	HEG - 47T - OD:5.551" - SB

STEEL CLUTCHES

ILL	ALTO No.	REF No.	Description	Spec	Year	Qty	Notes
N I	110709	90348787	B1 Coast - Brake	.071	99-On	3	8T - ID: 3.582"
N I	110707B180	NA	B2 - 2nd Brake	.071	99-On	4	10T - ID: 5.538"
N I	159705-180	NA	B3 - Lo/Rev	.071	99-On	3-5	13T - ID: 5.657"
N I	110701	90348774	C2 - Direct	.071	99-On	4	12T - ID: 3.582"
N I	110703-195	90542937	C1 - Forward	.073	99-On	4	12T - ID: 4.491"
N I	110701A180	NA	C3 - Underdrive	.071	99-On	4	18T - ID: 3.582"
N I	159713-180	NA	B4 - 5th Brake	.071	99-On	6	12T - ID: 4.898"

OEI® Original Equipment Improvements

ILL	ALTO No.	REF No.	Description	Spec	Year	Qty	Notes
N I	159985	SK® AW55-50	VB Shift Kit®	Transgo®	99-On	1	

BANDS

ILL	ALTO No.	REF No.	Description	Spec	Year	Qty	Notes
N I	159950	NA	Band		99-On	1	

FILTERS

ILL	ALTO No.	REF No.	Description	Spec	Year	Qty	Notes
N I	159940	24220578	Filter with Rib		99-On	1	
N I	159940A	NA	Filter without Rib		99-On	1	
N I	159942	24240239	Filter			1	Chevy Equinox 5 Speed
		93743025				1	

BUSHINGS

ILL	ALTO No.	REF No.	Description	Spec	Year	Qty	Notes
N I	159625	NA	Bushing Kit (11)		99-On	1	
N I	159625B	NA	Bushing Kit (11)		99-On	1	Bi Metal
N I	159200	NA	Solenoid Bushing- brass		99-On	1	
N I	159200T	NA	Solenoid Bushing- teflon coated		99-On	1	
N I	159201	NA	Underdrive Drum		99-On	2	Bi Metal

AISIN WARNER / BORG WARNER

AW55-50SN 1999-On, AW55-51SN 2005-On
AF33-5, RE5F22A

BUSHINGS

ILL	ALTO No.	REF No.	Description	Spec	Year	Qty	Notes
N I	159202	NA	Front Pump		99-On	1	Bi Metal
N I	159203	NA	Rear Planetary - Rear		99-On	1	Bi Metal
N I	159204	NA	Rear Planetary - Front		99-On	1	Bi Metal
N I	159205	NA	Direct Front Hub Rear Sun Gear		99-On	4	Bi Metal
N I	159206	NA	Stator - Rear		99-On	1	Bi Metal
N I	159207	NA	Stator - Front		99-On	1	Bi Metal

WASHERS

ILL	ALTO No.	REF No.	Description	Spec	Year	Qty	Notes
N I	E043100100F	NA	Washer, Solenoid	Brass	99-On	1	4.250 x 2.880 x 1.00"

HARD PARTS

ILL	ALTO No.	REF No.	Description	Spec	Year	Qty	Notes
N I	159320	NA	Sprag Torque Converter	23 Element	99-On	1	
N I	159350	77362135	Valve Body - AW55-50SN, AF23/33 5 Speed (GM)		99-On	1	
N I	159350A		Valve Body - AW55-50SN, AF23/33 5 Speed (VOLVO)		99-On	1	

AISIN WARNER / BORG WARNER

AW TF60-SN (09G),TF61-SN (09K), TF62-SN (09M) 2003-13
TF70-SC 2006-13 6 SPEED

KITS

*Add Suffix SK for Super Kit

ILL	Description	Years	Friction Module	Steel Module	Overhaul Kit	Banner Kit	Master Kit
KT	Rebuilding Kit 09G with Pistons	03-13	129752	129753	129800	129901LS	129901
KT	Rebuilding Kit 09G without Pistons	03-13	129752	129753	129800X	129901XLS	129901X
KT	Rebuilding Kit 09Kwith Pistons	04-10	129752A	129753A	129800B	129903LS	129903
KT	Rebuilding Kit 09K without Pistons	04-13	129752A	129753A	129800BX	129903XLS	129903X
KT	Rebuilding Kit TF70-SC with Pistons	06-13	129752B	129753B	129802	129905LS	129905
KT	Rebuilding Kit TF70-SC without Pistons	06-13	129752B	129753B	129802X	129905XLS	129905X
KT	Rebuilding Kit 09M with Pistons	06-07	129752C	NA	129800C	129907LS	NA
KT	Rebuilding Kit 09M without Pistons	06-07	129752C	NA	129800C	129907XLS	NA
KT	Rebuilding Kit 09G	TBA	129752D	129753D	NA	NA	NA

MISCELLANEOUS GASKETS & KIT COMPONENTS

ILL	ALTO No.	REF No.	Description	Spec	Year	Qty	Notes
N I	129816	09G-321-370	Gasket, Oil Pan- 09G	Cork/Rub	03-13	1	
N I	129816M		Gasket, Oil Pan- 09G with Metal Inserts	Cork/Rub	03-13	1	
N I	129818	09K-321-370	Gasket, Oil Pan- 09K		03-13	1	
N I	129818M		Gasket, Oil Pan- 09K with Metal Inserts		03-13	1	

FRICTION CLUTCHES

ILL	ALTO No.	REF No.	Description	Spec	Year	Qty	Notes
N I	129700-170	NA	B1 - 2nd & 6th	.066/1.67	03-13	4	HEG - 40T - OD: 7.245" - SB
N I	129702-150	NA	B2 - Reverse thin	.059/1.50	03-13	6	HEG - 56T - OD: 5.790" - SB
N I	129702-173	NA	B2 - Reverse	.067/1.70	03-13	6	HEG - 56T - OD: 6.716" - SB
N I	129704-168	NA	C1 - 1st, 2nd, 3rd, 4th	.066/1.67	03-13	5	HEG - 56T - OD: 5.790" - SB
N I	129704-150	NA	C1 - 1st, 2nd, 3rd, 4th thin	.059/1.50	03-13	5	HEG - 56T - OD: 5.790" - SB
N I	129706-170	NA	C2 - 4th, 5th, 6th (09G)	.067/1.70	03-13	3	HEG - 55T - OD: 5.725" - SB
N I	129706-150	NA	C2 - 4th, 5th, 6th thin	.059/1.50	03-13	4	HEG - 55T - OD: 5.725" - SB
N I	129706A152	NA	C2 - 4th, 5th, 6th (09K)	.060/1.52	03-10	6	HEG - 60T - OD: 5.732" - SB
N I	129706A170	NA	C2 - 4th, 5th, 6th (09K)	.067/1.70	03-10	AR	HEG - 60T - OD: 5.732" - SB
N I	129708-150	NA	C3 - Rev, 3rd, 5th thin	.059/1.50	03-13	4	HEG - 56T - OD: 6.180" - SB
N I	129708A150	NA	C3 - Rev, 3rd, 5th thin	.059/1.50	03-13	4	SAS - 56T - OD: 6.180" - SB
N I	129708-173	NA	C3 - Rev, 3rd, 5th	.066/1.67	03-13	3	HEG - 56T - OD: 6.180" - SB
N I	129708A173	NA	C3 - Rev, 3rd, 5th	.066/1.67	03-13	3	SAS - 56T - OD: 6.180" - SB

STEEL CLUTCHES

ILL	ALTO No.	REF No.	Description	Spec	Year	Qty	Notes
N I	129701-180	NA	B1 - 2nd & 6th	.072/1.83	03-13	4	12T - ID: 6.611"
N I	129703-183	NA	B2 - Reverse	.072/1.83	03-13	5	14T - ID: 6.220"
N I	129705-180	NA	C1 - 1st, 2nd, 3rd, 4th	.070/1.78	03-13	5	40T - ID: 5.148"
N I	129707-180	NA	C2 - 4th, 5th, 6th	.071/1.80	03-13	3-6	24T - ID: 5.000"
N I	129707-240	NA	C2 - 4th, 5th, 6th - TF70	.094/2.39	03-13	1	24T - ID: 5.000"
N I	129709-180	NA	C3 - Rev, 3rd, 5th	.071/1.80	03-13	3	40T - ID: 5.149"

PRESSURE PLATES

ILL	ALTO No.	REF No.	Description	Spec	Year	Qty	Notes
N I	129701-230	NA	B1 - 2nd & 6th Apply	.091/2.31	03-13	1	12T - ID: 6.611"

OEI® Original Equipment Improvements

ILL	ALTO No.	REF No.	Description	Spec	Year	Qty	Notes
KT	129985	SK® 09G	VB Shift Kit®	Transgo®	03-13	1	Corrects shifts, shudder, pressure

AISIN WARNER / BORG WARNER

AW TF60-SN (09G),TF61-SN (09K), TF62-SN (09M) 2003-13
TF70-SC 2006-13 6 SPEED

FILTERS

ILL	ALTO No.	REF No.	Description	Spec	Year	Qty	Notes
N I	129940	09G-325-429	Filter - 09G		03-13	1	
N I	129940A	09G-325-429A	Filter - 09G (Deep pan)		03-13	1	
N I	129942	09K-325-429	Filter - 09K		04-10	1	
N I	129944	24347-551-087	Filter - BMW Mini Cooper		02-09	1	
N I	129944A	24347-566-358	Filter - BMW Mini Cooper		02-09	1	
N I	129946	09M-325-429	Filter - 09M		06-07	1	
N I	129948	NA	Filter - TF70SC (Peugeot 308)		09-13	1	

SEALING RINGS

ILL	ALTO No.	REF No.	Description	Spec	Year	Qty	Notes
N I	A40045TCU25	VW-O-3	Sealing Ring - Torque Converter Teflon	Scarf Cut	09-13	25/pk	1.561 x 1.373 x .090"

WASHERS

ILL	ALTO No.	REF No.	Description	Spec	Year	Qty	Notes
N I	E043100100F	NA	Washer, Solenoid- 09G	Brass	04-13	1	4.250 x 2.880 x 1.00"

BUSHINGS

ILL	ALTO No.	REF No.	Description	Spec	Year	Qty	Notes
N I	129200	NA	Front Pump - 09G		04-13	1	
KT	129625B	NA	Bushing Kit- TF60-SN- 09G	Bi-Metal	04-13	1	
N I	129201	NA	Sun Gear - 09G		04-13	2	
N I	129202	NA	Rear Cover - 09G		04-13	1	
N I	129203T	NA	Solenoid- Teflon		04-13	1	

ELECTRONIC CONTROL COMPONENTS

ILL	ALTO No.	REF No.	Description	Spec	Year	Qty	Notes
KT	129570		Solenoid Kit		04-13	1	6 solenoids
N I	129501	09G-927-363	Solenoid wiring harness - 09G		04-13	1	
N I	129502	09G-927-363B	Solenoid wiring harness - 09G		04-13	1	
N I	129503	NA	Solenoid TCC Linear 09G VW/Audi Black Connector (5.3 ohm)		04-13	1	
N I	129504	NA	Solenoid EPC Linear 09G VW/Audi Green Connector (5.3 ohm)		04-13	1	
N I	129504	NA	Solenoid C1 Clutch Linear Shift Control 09G VW/Audi Green Connector (5.3 ohm)		04-13	1	
N I	129504	NA	Solenoid C2 Clutch Linear Shift Control 09G VW/Audi Green Connector (5.3 ohm)		04-13	1	
N I	129504	NA	Solenoid C3 Clutch Linear Shift Control 09G VW/Audi Green Connector (5.3 ohm)		04-13	1	
N I	129504	NA	Solenoid B1 Band Linear Shift Control 09G VW/Audi Green Connector (5.3 ohm)		04-13	1	
N I	129350A	09G-321-361	Valve Body-TF60-SN (09G)		04-13	1	
N I	129350B	09G-325-039B	Valve Body-TF60-SN (09G)		04-13	1	
N I	129350C	09G-325-039D	Valve Body-TF60-SN (09G)		04-13	1	

PISTONS

ILL	ALTO No.	REF No.	Description	Spec	Year	Qty	Notes
N I	129670	NA	Molded Piston Kit - TF60-SN (09G), TF61-SN (09K)		03-10	1	4 pistons
N I	129670A	NA	Molded Piston Kit - TF62-SN (09M)		03-10	1	4 pistons
N I	129671	NA	Molded Piston Kit - TF70-SC		06-On	1	3 pistons
N I	129301	NA	K2 - TF60-SN (09G), TF61-SN (09K), TF62-SN (09M)		04-13	1	

AISIN WARNER / BORG WARNER

AW TF60-SN (09G),TF61-SN (09K), TF62-SN (09M) 2003-13
TF70-SC 2006-13 6 SPEED

PISTONS

ILL	ALTO No.	REF No.	Description	Spec	Year	Qty	Notes
N I	129302	NA	K3 balance - TF60-SN (09G), TF61-SN (09K), TF62-SN (09M)(09G)		04-13	1	
N I	129303	NA	K2 balance - TF60-SN (09G), TF61-SN (09K), TF62-SN (09M)		04-13	1	
N I	129304A	NA	K1 balance - TF60-SN (09G), TF61-SN (09K), height 0.390"		04-On	1	
N I	129304B	NA	K1 balance - TF62-SN (09M), height 0.425"		04-On	1	

HARD PARTS

ILL	ALTO No.	REF No.	Description	Spec	Year	Qty	Notes
N I	129320	BW-SP-5	Torque Converter Sprag - 09G	22 Element	04-13	1	
N I	129350	NA	Oil Pan - 09G		04-13	1	
N I	129355A	NA	Repair Kit for Rear Cover Sleeve - 09G		04-13	1	

AISIN WARNER / BORG WARNER

AW TR60-SN (09D) 6 Speed

2004-On

KITS

*Add Suffix SK for Super Kit

ILL	Description	Years	Friction Module	Steel Module	Overhaul Kit	Banner Kit	Master Kit
KT	Rebuilding Kit	04-On	185752	185753	185800	185901LS	185901

MISCELLANEOUS GASKETS & KIT COMPONENTS

ILL	ALTO No.	REF No.	Description	Spec	Year	Qty	Notes
N I	185816	NA	Gasket, Oil Pan		04-On	1	
N I	010166B	ARP-166	O-Ring, Torque Converter	Poly	04-On	1	6.737" x .103"

FRICTION CLUTCHES

ILL	ALTO No.	REF No.	Description	Spec	Year	Qty	Notes
N I	185708-200	NA	K-1 clutch	.080	04-On	7	HEG - 40T - OD: 6.499" - SB
N I	185706-200	NA	K-2 clutch	.079	04-On	7	HEG - 42T - OD: 5.388" - SB
N I	185702-200	NA	K-3 clutch	.079	04-On	5	HEG - 36T - OD: 6.711" - SB
N I	185700-200	NA	B-1 clutch	.080	04-On	6	HEG - 48T - OD: 7.663" - SB
N I	185704-170	NA	B-2 clutch	.065	04-On	7	HEG - 50T - OD: 6.812" - SB
N I	185710-165	NA	Transfer case (1 sided) -internal spline	.065	04-On	7	HEG - 50T - OD: 4.989" - SB
N I	185711-165	NA	Transfer case (1 sided) - external spline	.065	04-On	7	HEG - 16T - ID: 3.815" - SB

STEEL CLUTCHES

ILL	ALTO No.	REF No.	Description	Spec	Year	Qty	Notes
N I	185709-200	NA	K-1 clutch	.078	04-On	7	36T - ID: 5.888"
N I	185707-200	NA	K-2 clutch	.078	04-On	7	36T - ID: 4.496"
N I	185703-200	NA	K-3 clutch	.078	04-On	5	36T - ID: 5.745"
N I	185703-320	NA	K-3 clutch	.126	04-On	5	36T - ID: 5.745"
N I	185701-200	NA	B-1 clutch	.079	04-On	5	10T - ID: 6.691"
N I	185705-180	NA	B-2 clutch	.071	04-On	6	24T - ID: 6.274"

TORQUE CONVERTER - FRICTION RINGS AND CLUTCHES

ILL	ALTO No.	REF No.	Description	Spec	Year	Qty	Notes
N I	185716	AW-CP-6F	Torque Convertor friction	.147	04-On	2	HEG - 36T - OD: 10.206" - SB
N I	185717-320	AW-CP-4S	Torque Convertor steel	.126	04-On	1	20T - ID: 8.760"
N I	185717-500	AW-CP-5P	Torque Convertor steel	.197	04-On	1	20T - ID: 8.760"
N I	185765-380	NA	Torque Convertor steel	.150	04-On	1	48T - ID: 5.862"

FILTERS

ILL	ALTO No.	REF No.	Description	Spec	Year	Qty	Notes
N I	185940	09D-325-435	Filter		04-On	1	

SNAP RINGS

ILL	ALTO No.	REF No.	Description	Spec	Year	Qty	Notes
KT	A40047M	22451	Transfer Case - Sprocket		04-On	1	

BUSHINGS

ILL	ALTO No.	REF No.	Description	Spec	Year	Qty	Notes
KT	185625	NA	Bushing Kit	Bronze	04-On	1	9 bushings

ELECTRONIC CONTROL COMPONENTS

ILL	ALTO No.	REF No.	Description	Spec	Year	Qty	Notes
KT	129570	NA	Solenoid Kit		04-On	1	6 solenoids
N I	129503	NA	Solenoid TCC Linear 09D VW/Audi/Porsche Black Connector (5.3 ohm)		04-On	1	

AISIN WARNER / BORG WARNER

AW TR60-SN (09D) 6 Speed

2004-On

ELECTRONIC CONTROL COMPONENTS

ILL	ALTO No.	REF No.	Description	Spec	Year	Qty	Notes
N I	129504	NA	Solenoid EPC Linear 09D VW/Audi/Porsche Green Connector (5.3 ohm)		04-On	1	
N I	129504	NA	Solenoid C1 Clutch Linear Shift Control 09D VW/Audi/Porsche Green Connector (5.3 ohm)		04-On	1	
N I	129504	NA	Solenoid C2 Clutch Linear Shift Control 09D VW/Audi/Porsche Green Connector (5.3 ohm)		04-On	1	
N I	129504	NA	Solenoid C3 Clutch Linear Shift Control 09D VW/Audi/Porsche Green Connector (5.3 ohm)		04-On	1	
N I	129504	NA	Solenoid B1 Band Linear Shift Control 09D VW/Audi/Porsche Green Connector (5.3 ohm)		04-On	1	

AISIN WARNER / BORG WARNER

AW60-40, AW60-42LE (AF-13) 1995-On
AW60-41 (AF-17) 1998-On

KITS

*Add Suffix SK for Super Kit

ILL	Description	Years	Friction Module	Steel Module	Overhaul Kit	Banner Kit	Master Kit
KT	Rebuilding Kit - 60-42LE except Suzuki Aero	95-On	115752	115753	115800	115901LS	115901
KT	Rebuilding Kit - 60-42LE- only Suzuki Aerio	95-On	115752	115753B	115800	115901BLS	115901B
KT	Rebuilding Kit - 60-41SN	98-On	115752A	115753A	115800	115903LS	115903

FRICTION CLUTCHES

ILL	ALTO No.	REF No.	Description	Spec	Year	Qty	Notes
N I	115700	90444669	Forward- 60-42LE	.067	95-On	2	HEG - 51T - OD: 5.600" - Radial
N I	115700	90444669	Forward- 60-41SN	.067	95-On	3	HEG - 51T - OD: 5.600" - Radial
N I	115700	90444669	3-4 Clutch- 60-41SN	.067	95-On	3	HEG - 51T - OD: 5.600" - Radial
N I	115700	90444669	3-4 Clutch- 60-42LE	.067	95-On	2	HEG - 51T - OD: 5.600" - Radial
N I	115702	90444546	Reverse - 60-42LE	.071	95-On	2	Tan - 44T - OD: 4.962" - SM
N I	115702A180	09120553	Reverse - 60-41SN	.071	98-On	2	Tan - 44T - OD: 5.250" - SM
N I	110704	NA	Low / Reverse- 60-42LE	.067	95-On	4	HEG - 33T - OD: 6.300" - SM
N I	110704	NA	Low / Reverse- 60-41SN	.067	95-On	5	HEG - 33T - OD: 6.300" - SM
N I	115708	90444685	Coast- 60-42LE	.067	95-On	2	Tan - 44T - OD: 4.962" - SM
N I	115708	90444685	Coast- 60-41SN	.067	95-On	2	Tan - 44T - OD: 4.962" - SM

STEEL CLUTCHES

ILL	ALTO No.	REF No.	Description	Spec	Year	Qty	Notes
N I	115701	90444670	Forward- 60-42LE-except Suzuki Aerio	.071	98-On	3	20T - ID: 4.680"
N I	115701	90444670	Forward-90-41SN	.071	95-On	3	20T - ID: 4.680"
N I	115701-160	NA	Forward - 60-42LE- only Suzuki Aerio	.063	95-On	3	20T - ID: 4.680"
N I	115707	90444885	3-4 Clutch	.071	95-97	2-3	36T - ID: 4.680"
N I	115707-250	NA	3-4 Clutch	.098	98-On	AR	36T - ID: 4.680"
N I	115703	90444686	Reverse - 60-42LE	.071	95-On	2	6T - ID: 4.100"
N I	115703A180	09120554	Reverse - 60-41SN	.071	98-On	2	15T - ID: 4.100"
N I	115705	90444973	Low / Reverse	.071	95-On	5	15T - ID: 5.660"
N I	115709	90444863	Coast	.071	95-On	3	16T - ID: 4.092"

PRESSURE PLATES

ILL	ALTO No.	REF No.	Description	Spec	Year	Qty	Notes
N I	115701-360	NA	Forward	.141	95-On	1	20T - ID: 4.680"
N I	115707-360	NA	3-4 Clutch	.141	95-On	AR	36T - ID: 4.680"
N I	115707-390	NA	3-4 Clutch	.153	95-On	AR	36T - ID: 4.680"
N I	115705-360	NA	Low / Reverse	.141	95-On	1	15T - ID: 5.660"
N I	115709-325	90444550	Coast	.126	95-On	AR	16T - ID: 4.092"
N I	115709-360	NA	Coast	.141	95-On	AR	16T - ID: 4.092"
N I	115709-383	NA	Coast	.148	95-On	AR	16T - ID: 4.092"
N I	115709-400	NA	Coast	.157	95-On	AR	16T - ID: 4.092"

BANDS

ILL	ALTO No.	REF No.	Description	Spec	Year	Qty	Notes
N I	115950	26971-65G10	Band - Intermediate		95-On	1	

FILTERS

ILL	ALTO No.	REF No.	Description	Spec	Year	Qty	Notes
N I	115940	26445-60G10	Filter		95-On	1	

AISIN WARNER / BORG WARNER

AW60-40, AW60-42LE (AF-13) 1995-On
AW60-41 (AF-17) 1998-On

METAL CLAD SEALS

ILL	ALTO No.	REF No.	Description	Spec	Year	Qty	Notes
N I	044400	22881-60G10	Front Pump		95-On	1	
N I	115425	27431-73B20	Axle - Right	2.285	95-On	1	
N I	115426	09283-35037	Axle - Left	2.125	95-On	1	
N I	044410	25981-60G10	Manual Lever		95-On	1	

WASHERS

ILL	ALTO No.	REF No.	Description	Spec	Year	Qty	Notes
N I	115635	NA	Washer Kit		95-On	1	

ELECTRONIC CONTROL COMPONENTS

ILL	ALTO No.	REF No.	Description	Spec	Year	Qty	Notes
N I	115501	NA	Solenoid, TCC		95-On	1	
N I	115502	NA	Solenoid, Shift		95-On	1	

AISIN WARNER / BORG WARNER

AW80-40LS, AW81-40LE, U440E/F, U441E/F
GM/DAEWOO/TOYOTA 2004-ON

KITS

*Add Suffix SK for Super Kit

ILL	Description	Years	Friction Module	Steel Module	Overhaul Kit	Banner Kit	Master Kit
KT	Rebuilding Kit- AW80-40,U440E/F Combo-with Molded Pistons	04-On	187752	187753	187802	187903LS	187903
KT	Rebuilding Kit- AW80-40,U440E/F Combo-without Molded Pistons	04-On	187752	187753	187802X	187903XLS	187903X

MISCELLANEOUS GASKETS & KIT COMPONENTS

ILL	ALTO No.	REF No.	Description	Spec	Year	Qty	Notes
N I	187716	93741472	Gasket, Pan	Cork/Rub	04-On	1	

FRICTION CLUTCHES

ILL	ALTO No.	REF No.	Description	Spec	Year	Qty	Notes
N I	187700-185	35633-80A010	Forward	.073/1.85	04-On	4	HEG - 30T - OD: 4.418" - SB
N I	187702-185	35667-80A020	Direct	.073/1.85	04-On	2	HEG - 36T - OD: 4.679" - 8PLNI
N I	187704-185	35677-80A040	Reverse	.073/1.85	04-On	2	HEG - 30T - OD: 4.622" - SB
N I	187706-185	35682-80A020	Reverse Brake	.073/1.85	04-On	2	HEG - 50T - OD: 6.062" - SB
N I	187708-185	35683-80A020	Low/Reverse (1st & 2nd Brake)	.073/1.85	04-On	4	HEG - 48T - OD: 5.656" - SB
N I	187710-185	35633-80A030	Overdrive (2nd Coast & 4th Brake)	.073/1.85	04-On	2	HEG - 36T - OD: 6.615" - SB

STEEL CLUTCHES

ILL	ALTO No.	REF No.	Description	Spec	Year	Qty	Notes
N I	187701-183	93741572	Forward	.072/1.83	04-On	4	18T - ID: 3.786"
N I	187703-200	93741585	Direct	.079/2.0	04-On	2	12T - ID: 4.005"
N I	187703A180	NA	Direct	.071/1.8	04-On	1	16T - ID: 3.980"
N I	187703B230	NA	Direct	.091/2.31	04-On	1	16T (8 notched) - ID: 3.980"
N I	187707-200	93741617	Reverse Brake	.079/2.0	04-On	2	12T - ID: 5.146"
N I	187709-183	93741618	Low/Reverse (1st & 2nd Brake)	.072/1.83	04-On	4	12T - ID: 5.044"
N I	187711-180	93741450	Overdrive (2nd Coast & 4th Brake)	.071/1.8	04-On	1	12T - ID: 5.878"
N I	187711-203	93741442	Overdrive (2nd Coast & 4th Brake)	.080/2.03	04-On	1	12T - ID: 5.878"
N I	187711-220	NA	Overdrive Brake	.087/2.21	04-On	1	12T - ID: 5.878"

PRESSURE PLATES

ILL	ALTO No.	REF No.	Description	Spec	Year	Qty	Notes
N I	187701-312	NA	Forwrd top	.123/3.12	04-On	1	18T - ID: 3.780"
N I	187703C320	NA	Direct top	.126/3.2	04-On	1	12T - ID: 3.980"
N I	187705-300	93741588	Reverse top	.119/3.02	04-On	1	24T - ID: 3.955"
N I	187705-300	93741588	Reverse bottom apply	.119/3.02	04-On	1	24T - ID: 3.955"
N I	187705-320	NA	Reverse top	.126/3.2	04-On	1	24T - ID: 3.955"
N I	187711-500	93741447	Overdrive Brake top	.197/5.0	04-On	1	12T - ID: 5.848"
N I	187760	93741576	Forward		04-On	1	
N I	187761	93741603	Direct		04-On	1	
N I	187762A	93741925	Reverse top		04-On	1	
N I	187762B	93741589	Reverse bottom apply		04-On	1	
N I	187763	93741613	Reverse Brake		04-On	1	
N I	187764	93741612	Low/Reverse (1st & 2nd Brake)		04-On	1	
N I	187765	93741447	Overdrive (2nd Coast & 4th Brake)		04-On	1	

FILTERS

ILL	ALTO No.	REF No.	Description	Spec	Year	Qty	Notes
N I	187940	35330-52010	Filter - Metal, Sump		04-On	1	
N I	187940A	35303-52020	Filter - Metal/Nylon		13-16	1	

AISIN WARNER / BORG WARNER

AW80-40LS, AW81-40LE, U440E/F, U441E/F
GM/DAEWOO/TOYOTA 2004-ON

METAL CLAD SEALS

ILL	ALTO No.	REF No.	Description	Spec	Year	Qty	Notes
N I	187401	93741869	Axle - Left AW80-40		04-On	1	
N I	187401A	NA	Axle - Left U440		04-On	1	
N I	187402	93741870	Axle - Right AW80-40		04-On	1	
N I	187402A	NA	Axle - Right U440		04-On	1	

PISTONS

ILL	ALTO No.	REF No.	Description	Spec	Year	Qty	Notes
N I	187670	NA	Piston Kit		04-On	1	2 pistons
N I	187670A	NA	Piston Kit		04-On	1	3 pistons
N I	187302	128763	Piston, Forward Drum - U440		04-On	1	

AISIN WARNER / BORG WARNER

AW 450-43LE 1998-On

ISUZU RNJ

KITS

*Add Suffix SK for Super Kit

ILL	Description	Years	Friction Module	Steel Module	Overhaul Kit	Banner Kit	Master Kit
KT	Rebuilding Kit	98-On	153752	153753	153800	153901LS	153901

MISCELLANEOUS GASKETS & KIT COMPONENTS

ILL	ALTO No.	REF No.	Description	Spec	Year	Qty	Notes
N I	083816	NA	Gasket, Oil Pan	Cork/Rub	98-On	1	

FRICTION CLUTCHES

ILL	ALTO No.	REF No.	Description	Spec	Year	Qty	Notes
N I	083700	8-97256-973-0	Forward	.083	98-On	7	HEG - 46T - OD: 4.987" - SM
N I	083700-180	NA	Forward - selective	.071	98-On	AR	HEG - 46T - OD: 4.990" - SM
N I	083700	8-97256-973-0	Direct	.083	98-On	5	HEG - 46T - OD: 4.987" - SM
N I	083700-198	NA	Direct - selective	.078	98-On	5	HEG - 46T - OD: 4.987" - SM
N I	083702	8-97256-938-0	2nd Brake	.083	98-On	5	HEG - 70T - OD: 6.887" - SM
N I	083704	8-97256-954-0	Low / Reverse	.067	98-On	6	HEG - 70T - OD: 6.887" - SM
N I	083710-210	8-97257-043-0	Overdrive Direct	.083	98-On	3	HEG - 47T - OD: 4.987" - SM
N I	083712-160	8-97257-023-0	Overdrive Brake	.063	98-On	3	HEG - 20T - OD: 7.230" - SM
N I	083712-210	NA	Overdrive Brake- selective	.082	98-On	3	HEG - 20T - OD: 7.230" - SM

STEEL CLUTCHES

ILL	ALTO No.	REF No.	Description	Spec	Year	Qty	Notes
N I	083701	8-97256-967-0	Forward	.071	98-On	7	10T - ID: 3.997"
N I	083701-190	NA	Forward - selective	.075	98-On	AR	10T - ID: 3.997"
N I	083701-200	8-97256-970-0	Forward - selective	.079	98-On	AR	10T - ID: 3.997"
N I	083701-220	8-97256-971-0	Forward - selective	.087	98-On	AR	10T - ID: 3.997"
N I	083701-240	8-97256-972-0	Forward - selective	.095	98-On	AR	10T - ID: 3.997"
N I	083701-240	8-97256-972-0	Direct	.095	98-On	5	10T - ID: 3.400"
N I	083701	8-97256-967-0	Direct - selective	.071	98-On	AR	10T - ID: 3.997
N I	083701-190	NA	Direct - selective	.075	98-On	AR	10T - ID: 3.400
N I	083701-200	8-97256-970-0	Direct - selective	.079	98-On	AR	10T - ID: 3.997
N I	083701-220	8-97256-971-0	Direct - selective	.087	98-On	AR	10T - ID: 3.997
N I	083703-280	8-97256-939-0	2nd Brake	.110	98-On	5	6T - ID: 5.995"
N I	083705-280	8-97256-951-0	Low / Reverse	.110	98-On	6	16T - ID: 5.995"
N I	083711-200	8-97256-969-0	Overdrive Direct	.078	98-On	3	20T - ID: 4.050"
N I	083703A240	8-97257-021-0	Overdrive Brake	.095	98-On	2	6T - ID: 6.402

FILTERS

ILL	ALTO No.	REF No.	Description	Spec	Year	Qty	Notes
N I	153940	97202067	Filter		98-On	1	

BUSHINGS

ILL	ALTO No.	REF No.	Description	Spec	Year	Qty	Notes
N I	153625	NA	Bushing Kit		98-On	1	

HARD PARTS

ILL	ALTO No.	REF No.	Description	Spec	Year	Qty	Notes
N I	153320	NA	Sprag Torque Converter		98-On	1	

AISIN WARNER / BORG WARNER

AWF8F35, GA8F22AW, 8F45

8 Speed 2013-On

KITS

*Add Suffix SK for Super Kit

ILL	Description	Years	Friction Module	Steel Module	Overhaul Kit	Banner Kit	Master Kit
KT	Rebuilding Kit with Pistons	13-On	197752A	197753A	197806	197903LS	197903
KT	Rebuilding Kit without Pistons	13-On	197752A	197753A	197806X	197903XLS	197903X

FRICTION CLUTCHES

ILL	ALTO No.	REF No.	Description	Spec	Year	Qty	Notes
N I	197700-150	NA	C1 Clutch - Forward	.059/1.50	13-On	5	HEG - 54T - OD: 6.185"
N I	197702-170	NA	C2 Clutch - Direct/Int	.067/1.70	13-On	4	HEG - 55T - OD: 6.292"
N I	197704B150	NA	C3 Clutch - Underdrive	.059/1.50	13-On	4	HEG - 54T - OD: 6.520"
N I	197706-150	NA	C5 Clutch - Low/Reverse	.059/1.50	13-On	5	HEG - 60T - OD: 7.310
N I	197708-150	NA	C4 Clutch - Underdrive	.059/1.50	13-On	4	HEG - 36T - OD: 4.821"

STEEL CLUTCHES

ILL	ALTO No.	REF No.	Description	Spec	Year	Qty	Notes
N I	197701-180	NA	C1 Clutch - Forward	.072/1.83	13-On	4	40T - ID: 5.550"
N I	197701A140	NA	C1 Clutch - Forward Bottom	.055/1.40	13-On	4	36T - ID: 5.550"
N I	197703-180	NA	C2 Clutch - Direct/Int	.118/3.00	13-On	1	36T - ID: 5.762"
N I	197705A230	NA	C3 Clutch - Reverse	.091/2.31	13-On	2	36T - ID: 5.762"
N I	197705A300	NA	C3 Clutch - Reverse Bottom	.118/3.00	13-On	1	36T - ID: 5.762"
N I	197707-180	NA	C5 Clutch - Low/Reverse	.177/4.50	13-On	4	14T - ID: 6.810"
N I	197707A450	NA	C5 Clutch - Low/Reverse Bottom	.071/1.80	13-On	1	9T - ID: 6.814"
N I	197709-183	NA	C4 Clutch - Underdrive	.072/1.83	13-On	4	32T - ID: 3.963"

FILTERS

ILL	ALTO No.	REF No.	Description	Spec	Year	Qty	Notes
N I	197944	NA	Filter		13-On		

BUSHINGS

ILL	ALTO No.	REF No.	Description	Spec	Year	Qty	Notes
N I	197200A	NA	Pump Body		13-On		
N I	197201A	NA	Rear Planet, Sungear - Wide		13-On		
N I	197201B	NA	Rear Planet, Sungear - Narrow		13-On		
N I	197202	NA	Rear Planet, Sungear		13-On		

PISTONS

ILL	ALTO No.	REF No.	Description	Spec	Year	Qty	Notes
N I	197670A	NA	Piston Kit		13-On		

AISIN WARNER / BORG WARNER

AWF21, TF80-SC, AF40-6, AF4, AM6, AW6A-EL, AF21, TF81-SC
6 Speed 2005-On

KITS

*Add Suffix SK for Super Kit

ILL	Description	Years	Friction Module	Steel Module	Overhaul Kit	Banner Kit	Master Kit
KT	Rebuilding Kit - with Molded Pistons, TF80SC, AF40/AF4	05-On	197752	197753	197802	197901ALS	197901A
KT	Rebuilding Kit - without Molded Pistons, TF80SC, AF40/AF4	05-On	197752	197753	197802X	197901AXLS	197901AX
KT	Rebuilding Kit - with Molded Pistons, TF81SC, AF21/AWF21	05-On	197752	197753	197804	197901BLS	197901B
KT	Rebuilding Kit - without Molded Pistons, TF81SC, AF21/AWF21	05-On	197752	197753	197804X	197901BXLS	197901BX

FRICTION CLUTCHES

ILL	ALTO No.	REF No.	Description	Spec	Year	Qty	Notes
N I	197700-170	NA	C1 Clutch - 1st, 2nd, 3rd & 4th (1st engine braking)	.067/1.7	05-On	7	HEG - 54T - OD: 6.186" - SB
N I	197702-170	NA	C2 Clutch - 4th, 5th & 6th	.067/1.7	05-On	4	HEG - 55T - OD: 6.293" - SB
N I	197704-170	NA	C3 Clutch - Reverse, 3rd & 5th	.067/1.7	05-On	4	HEG - 54T - OD: 6.523" - SB
N I	197704A170	NA	C3 Clutch - Reverse, 3rd & 5th	.067/1.7	05-On	4	SAS - 54T - OD: 6.523" - SB
N I	197706-170	NA	B2 Clutch - Reverse (1st engine braking)	.067/1.7	05-On	7	HEG - 60T - OD: 7.306" - SB

STEEL CLUTCHES

ILL	ALTO No.	REF No.	Description	Spec	Year	Qty	Notes
N I	197701-180	NA	C1 Clutch - 1st, 2nd, 3rd & 4th (1st engine braking)	.071/1.8	05-On	6	40T - ID: 5.558"
N I	197703-180	NA	C2 Clutch - 4th, 5th & 6th	.071/1.8	05-On	3	36T - ID: 5.637"
N I	197705-230	NA	C3 Clutch - Reverse, 3rd & 5th	.091/2.31	05-On	4	36T - ID: 5.557"
N I	197707-180	NA	B2 Clutch - Reverse (1st engine braking)	.071/1.8	05-On	5	14T - ID: 6.811"

OEI® Original Equipment Improvements

ILL	ALTO No.	REF No.	Description	Spec	Year	Qty	Notes
N I	197985	SK® AWF21	VB Shift Kit®	Transgo®	05-On	1	

BANDS

ILL	ALTO No.	REF No.	Description	Spec	Year	Qty	Notes
N I	197950	NA	Band		05-On	1	

FILTERS

ILL	ALTO No.	REF No.	Description	Spec	Year	Qty	Notes
N I	197940	60-27-0F099-0080	Filter		05-On	1	
N I	197940A	NA	Filter		05-On	1	

METAL CLAD SEALS

ILL	ALTO No.	REF No.	Description	Spec	Year	Qty	Notes
N I	197400	5G1Z-7F401AA	Front Pump		05-On	1	
N I	197405	6E5Z-1177D	Right Axle		05-On	1	
N I	197406	6E5Z-1177E	Left Axle		05-On	1	

SNAP RINGS

ILL	ALTO No.	REF No.	Description	Spec	Year	Qty	Notes
N I	197250	NA	C1 & C2 pressure plate retaining snap ring		05-On	1	large
N I	197251	NA	C1 return spring retaining snap ring		05-On	1	small

AISIN WARNER / BORG WARNER

AWF21, TF80-SC, AF40-6, AF4, AM6, AW6A-EL, AF21, TF81-SC
6 Speed 2005-On

BUSHINGS

ILL	ALTO No.	REF No.	Description	Spec	Year	Qty	Notes
KT	197625	NA	Bushing Kit	Bronze	05-On	1	contains 6 bushings
N I	197200	NA	Front Pump Bi-Metal		05-On	1	OD: 50.39mm ID: 47.244mm Length: 13.258mm

WASHERS

ILL	ALTO No.	REF No.	Description	Spec	Year	Qty	Notes
N I	E043100100F	NA	Washer, Solenoid	Brass	05-On	1	4.250 x 2.880 x 1.00"

PISTONS

ILL	ALTO No.	REF No.	Description	Spec	Year	Qty	Notes
KT	197670	NA	Piston Kit- Transaxle		05-On	1	
N I	197300	NA	C1 Retainer		05-On	1	
N I	197301	NA	C2 Apply		05-On	1	
N I	197302	NA	C2 Retainer		05-On	1	
N I	197303	NA	C3 Balance		05-On	1	

HARD PARTS

ILL	ALTO No.	REF No.	Description	Spec	Year	Qty	Notes
N I	197320	BW-SP-2	Sprag, Torque Converter	24 element	05-On	1	
N I	197350A	NA	Valve Body		05-On	1	
N I	197352	NA	Valve Body - 2nd Generation		05-On	1	

AISIN WARNER / BORG WARNER

AISIN TW-40LS

1998-On

KITS

*Add Suffix SK for Super Kit

ILL	Description	Years	Friction Module	Steel Module	Overhaul Kit	Banner Kit	Master Kit
KT	Rebuilding Kit	98-On	175752C	NA	175832BX	175905XLS	TBA

FRICTION CLUTCHES

ILL	ALTO No.	REF No.	Description	Spec	Year	Qty	Notes
N I	175720-173	NL	Friction	.068/1.73	98-On	2	HEG - 36T - OD: 5.481"-PLNI
N I	175722-175	NL	Friction	.069/1.75	98-On	2	HEG - 42T - OD: 5.243"-PLNI
N I	175724-155	NL	Friction	.061/1.55	98-On	7	HEG - 28T - OD: 3.784"-PLNI
N I	175726-150	NL	Friction	.059/1.50	98-On	3	HEG - 50T - OD: 5.094"-PLNI

AISIN WARNER / BORG WARNER

AISIN A581 2001-On

FL50, FL60, FL70 FREIGHTLINER

KITS

*Add Suffix SK for Super Kit

ILL	Description	Years	Friction Module	Steel Module	Overhaul Kit	Banner Kit	Master Kit
KT	Rebuilding Kit	01-On	168752	168753	NA	NA	NA

FRICTION CLUTCHES

ILL	ALTO No.	REF No.	Description	Spec	Year	Qty	Notes
N I	168700-243	NA	D-1 Clutch	.096	01-On	5	HEG - 74T - OD: 9.01"
N I	168702-233	NA	D-2, D-3 Clutch	.092	01-On	12	HEG - 48T - OD: 6.275"
N I	168704-230	NA	B-1, B-2, B-3 Clutch	.092	01-On	16	HEG - 74T - OD: 9.396"
N I	168712-315	NA	Torque Converter	.124	01-On	1	HEG - 50T - OD: 9.800"

STEEL CLUTCHES

ILL	ALTO No.	REF No.	Description	Spec	Year	Qty	Notes
N I	168701-250	NA	D-1 Clutch	.098	01-On	5	6T - ID: 7.604"
N I	168705-250	NA	B-1, B-2 Clutch	.098	01-On	11	8T - ID: 7.639"
N I	168705-285	NA	B-1, B-2 Clutch - selective	.112	01-On	2	8T - ID: 7.639"
N I	168707-250	NA	B-3 Clutch	.098	01-On	7	24T - ID: 7.606"
N I	168707-330	NA	B-3 Clutch - selective	.130	01-On	1	24T - ID: 7.606"

HONDA

3 SPEED - 106mm Clutch

1976-85

A>

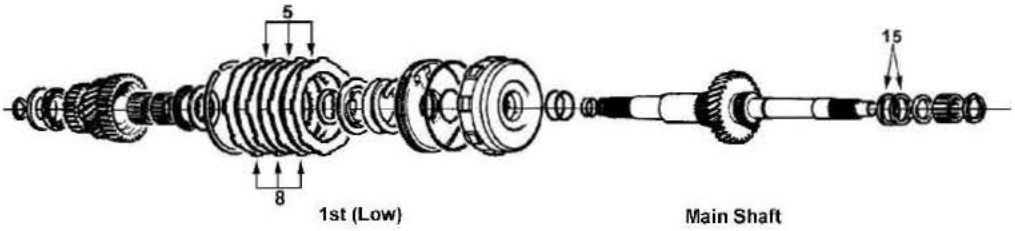

B>

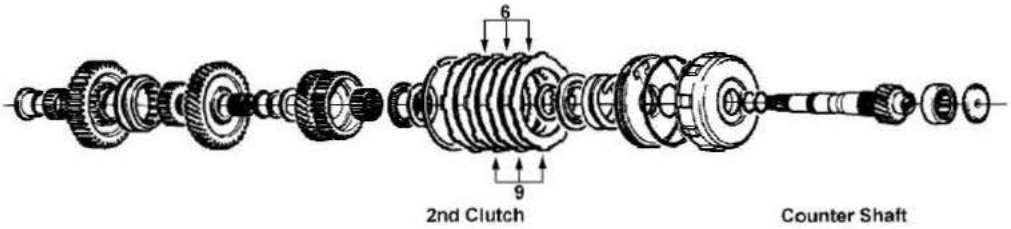

C>

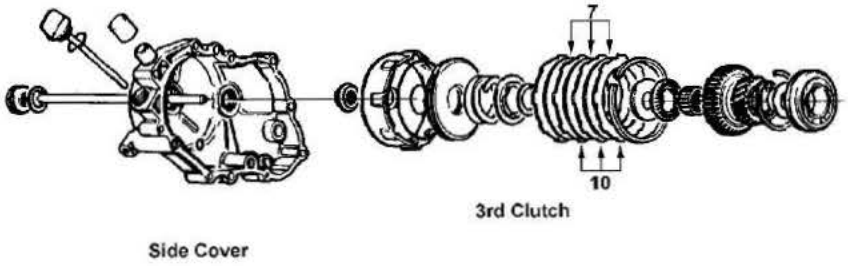

D>

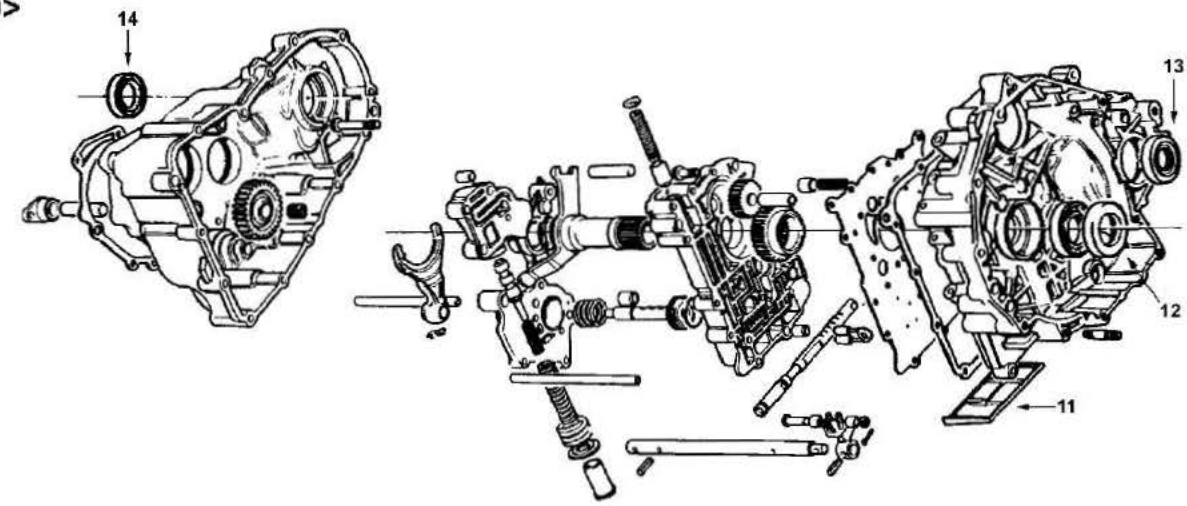

HONDA

3 SPEED - 106mm Clutch

1976-85

KITS

*Add Suffix SK for Super Kit

ILL	Description	Years	Friction Module	Steel Module	Overhaul Kit	Banner Kit	Master Kit
KT	Rebuilding Kit	76-85	058752	058753	058800	058901LS	058901

FRICTION CLUTCHES

ILL	ALTO No.	REF No.	Description	Spec	Year	Qty	Notes
5A	058700A	22544-PA9-000	1st	.075/1.9	76-85	3	SAS - 38T - OD: 4.171" - PL
6B	058700A	22544-PA9-000	2nd	.075/1.9	76-85	3	SAS - 38T - OD: 4.171" - PL
7C	058700A	22544-PA9-000	3rd	.075/1.9	76-85	3	SAS - 38T - OD: 4.171" - PL

STEEL CLUTCHES

ILL	ALTO No.	REF No.	Description	Spec	Year	Qty	Notes
8A	058701	22543-PA9-010	1st	.078/2.0	76-85	3	8T - ID: 3.220"
9B	058701	22543-PA9-010	2nd	.078/2.0	76-85	3	8T - ID: 3.220"
10C	058701	22543-PA9-010	3rd	.078/2.0	76-85	3	8T - ID: 3.220"
N I	058701A	NA	1st, 2nd & 3rd - selective	.071/1.8	76-85	AR	8T - ID: 3.220"
N I	058701-210	NA	1st, 2nd & 3rd - selective	.083/2.1	76-85	AR	8T - ID: 3.220"

FILTERS

ILL	ALTO No.	REF No.	Description	Spec	Year	Qty	Notes
11D	058940	25420-PA9-000	Filter		76-85	1	

METAL CLAD SEALS

ILL	ALTO No.	REF No.	Description	Spec	Year	Qty	Notes
12D	047401	91207-639-015	Converter Housing		76-85	1	
13D	047402	91206-639-005	Left Axle	68mm	76-85	1	
14D	047400	91205-611-005	Right Axle	56mm	76-85	1	
N I	047415	91209-551-015	Speedometer		76-85	1	
N I	058401	91201-PA9-004	Throttle Shaft	18mm	76-85	1	
N I	047410	91209-612-003	Manual Lever	22mm	76-85	1	

SEALING RINGS

ILL	ALTO No.	REF No.	Description	Spec	Year	Qty	Notes
KT	058601	F601A	Sealing Ring Kit - 3M		76-85	1	
15A	058100	22814-PA9-023	Mainshaft	Metal	76-85	2-3	

HONDA

4 SPEED 1983-85
2 SHAFT (106mm Clutch)

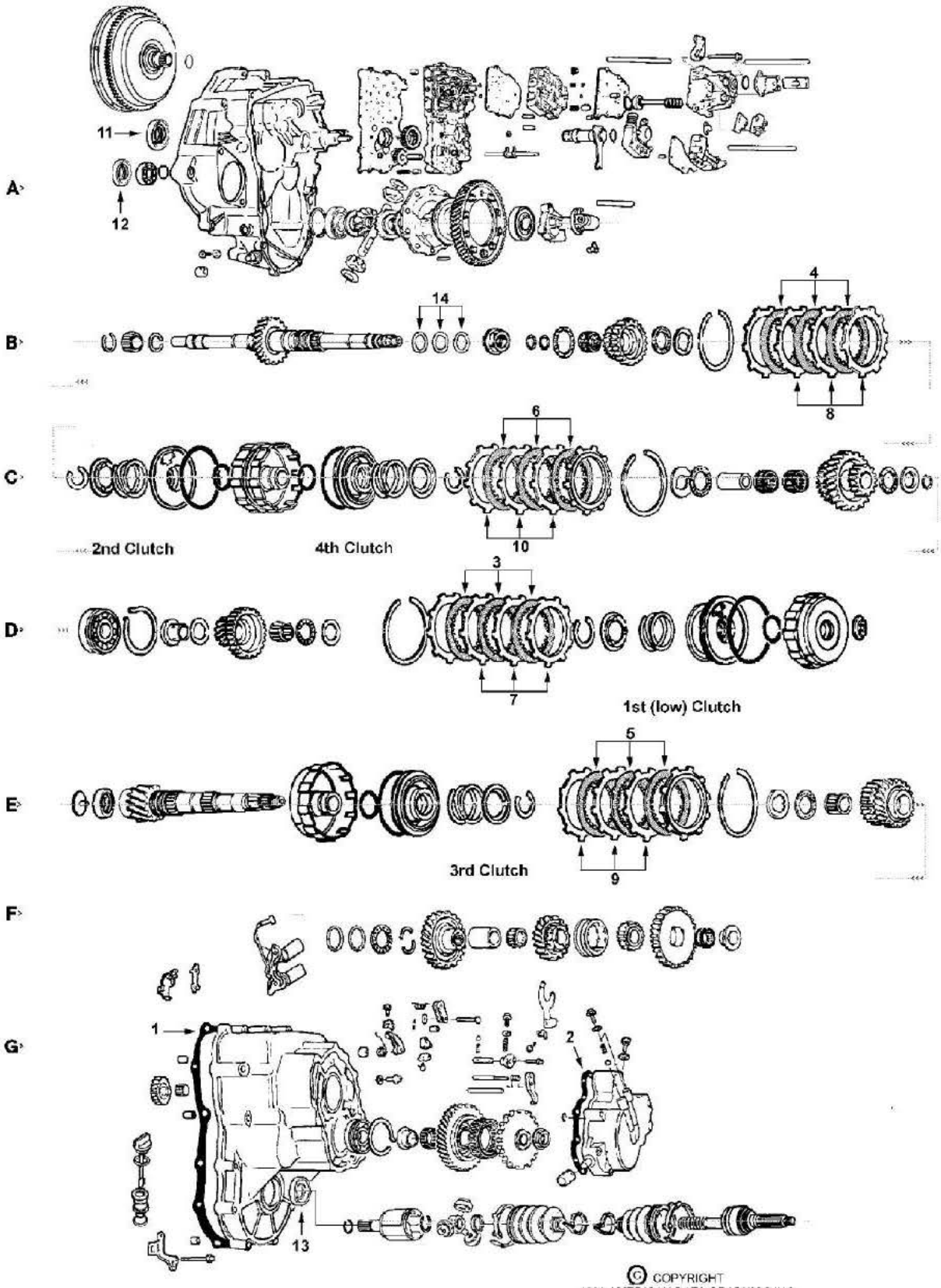

© COPYRIGHT
1999 AMERICAN DATA GRAPHICS, INC.

HONDA

4 SPEED 1983-85

2 SHAFT (106mm Clutch)

KITS

*Add Suffix SK for Super Kit

ILL	Description	Years	Friction Module	Steel Module	Overhaul Kit	Banner Kit	Master Kit
KT	Rebuilding Kit - AK	83-85	058752A	058753A	058802	058901ALS	058901A

MISCELLANEOUS GASKETS & KIT COMPONENTS

ILL	ALTO No.	REF No.	Description	Spec	Year	Qty	Notes
1G	TBA	21811-PC9-000	Gasket, Case		83-85	1	
2G	TBA	21812-PC9-000	Gasket, Right Side		83-85	1	

FRICTION CLUTCHES

ILL	ALTO No.	REF No.	Description	Spec	Year	Qty	Notes
3D	058700A	Various	1st	.075/1.9	83-85	3	SAS - 38T - OD: 4.171" - PL
4B	058700A	Various	2nd	.075/1.9	83-85	3	SAS - 38T - OD: 4.171" - PL
5E	058700A	Various	3rd	.075/1.9	83-85	3	SAS - 38T - OD: 4.171" - PL
6C	058700A	Various	4th	.075/1.9	83-85	3	SAS - 38T - OD: 4.171" - PL

STEEL CLUTCHES

ILL	ALTO No.	REF No.	Description	Spec	Year	Qty	Notes
7D	058701	Various	1st	.078/2.0	83-85	3	8T - ID: 3.220"
8B	058701	Various	2nd	.078/2.0	83-85	3	8T - ID: 3.220"
9E	058701	Various	3rd	.078/2.0	83-85	3	8T - ID: 3.220"
10C	058701	Various	4th	.078/2.0	83-85	3	8T - ID: 3.220"
N I	058701A	NA	1st, 2nd, 3rd & 4th - selective	.071/1.8	83-85	AR	8T - ID: 3.220"
N I	058701-210	NA	1st, 2nd, 3rd & 4th - selective	.083/2.1	83-85	AR	8T - ID: 3.220"

FILTERS

ILL	ALTO No.	REF No.	Description	Spec	Year	Qty	Notes
N I	058942	25420-PC9-010	Filter		83-85	1	

METAL CLAD SEALS

ILL	ALTO No.	REF No.	Description	Spec	Year	Qty	Notes
11A	047401	91207-639-015	Converter Housing		83-85	1	
12A	058400	91206-PC9-005	Left Axle	76mm	83-85	1	
13G	058402	91205-PC9-005	Right Axle	62mm	83-85	1	
N I	047415	91209-551-015	Speedometer		83-85	1	
N I	058401	91201-PA9-004	Throttle Shaft	18mm	83-85	1	
N I	047410	91209-612-003	Manual Lever	22mm	83-85	1	

SEALING RINGS

ILL	ALTO No.	REF No.	Description	Spec	Year	Qty	Notes
KT	058600	NA	Sealing Ring Kit - 3M		83-85	1	
14B	058100	22814-PA9-023	Mainshaft	32mm	83-85	3	

HONDA

4 SPEED 1984-On
2 SHAFT (110mm Clutch)

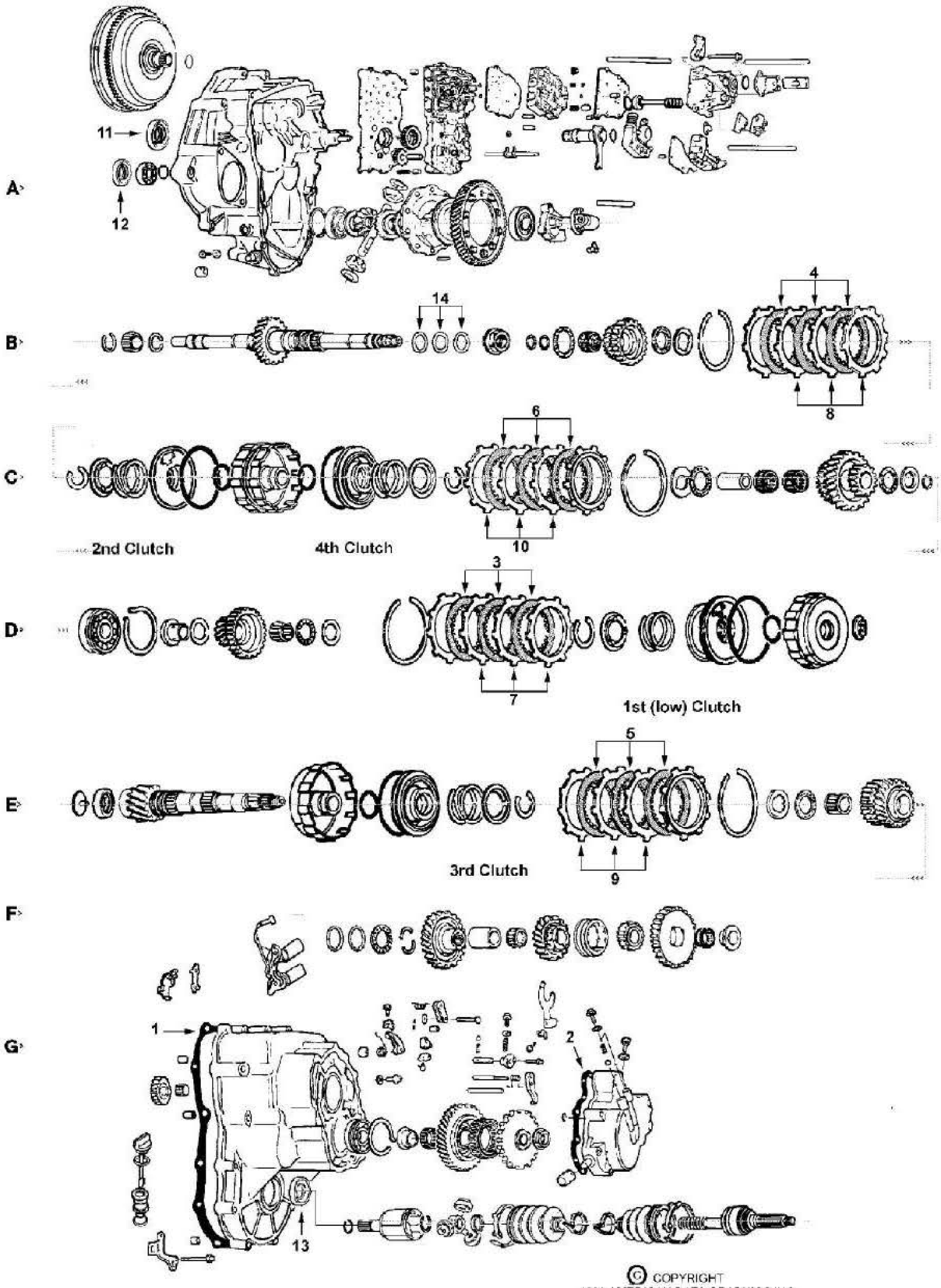

© COPYRIGHT
1999 AMERICAN DATA GRAPHICS, INC.

HONDA

4 SPEED 1984-On

2 SHAFT (110mm Clutch)

KITS

*Add Suffix SK for Super Kit

ILL	Description	Years	Friction Module	Steel Module	Overhaul Kit	Banner Kit	Master Kit
KT	Rebuilding Kit - HONDA ACCORD AS	84-85	058752B	058753B	058802	058903LS	058903
KT	Rebuilding Kit - HONDA CIVIC CA	86-87	058752B	058753C	058808	058903BLS	058903B
KT	Rebuilding Kit - HONDA CIVIC L4, ML4A	88-91	058752B	058753F	058808	058903BLS	058903C
KT	Rebuilding Kit - HONDA CIVIC A4RA, B4RA, BDRA, M4RA	96-00	058752B	058753P	058802A	058903FLS	058903F
KT	Rebuilding Kit - HONDA CIVIC BMXA, SLXA	01-On	058752B	058753P	058802D	058903GLS	058903G
KT	Rebuilding Kit - HONDA PRELUDE DX AS (with Carb)	84-87	058752B	058753B	058802	058903LS	058903
KT	Rebuilding Kit - ACURA INTEGRA CA	86-87	058752B	058753C	058804	058903ALS	058903A
KT	Rebuilding Kit - ACURA INTEGRA P1	88-89	058752B	058753F	058804A	058903DLS	058903D

KITS - HI-PERFORMANCE Red Eagle®

ILL	Description	Years	Friction and Steel Module	Overhaul Kit	Banner Kit	Master Kit
KT	Rebuilding Kit - A4RA, B4RA	96-00	058750PA	058802AT	NA	058903FA

MISCELLANEOUS GASKETS & KIT COMPONENTS

ILL	ALTO No.	REF No.	Description	Spec	Year	Qty	Notes
1G	TBA	21811-PC9-000	Gasket, Case - AS		84-87	1	
1G	TBA	21811-PC9-910	Gasket, Case - CA		86-87	1	
1G	TBA	21811-PL4-000	Gasket, Case - L4, ML4A		88-91	1	
1G	TBA	21811-P56-000	Gasket, Case - Civic (all)		92-On	1	
1G	TBA	21811-PP1-010	Gasket, Case - P1		88-89	1	
2G	TBA	21812-PC9-000	Gasket, Right Side - AS, CA		84-87	1	
2G	TBA	21812-PL4-000	Gasket, Right Side - L4, ML4A, P1		88-91	1	
2G	TBA	21812-P24-J01	Gasket, Right Side - Civic (all)		92-On	1	

FRICTION CLUTCHES

ILL	ALTO No.	REF No.	Description	Spec	Year	Qty	Notes
3D	058710A	Various	1st	.075/1.9	84-On	3	SAS - 38T - OD: 4.323" - PL
4B	058710A	Various	2nd	.075/1.9	84-On	3	SAS - 38T - OD: 4.323" - PL
5E	058710A	Various	3rd	.075/1.9	84-On	3	SAS - 38T - OD: 4.323" - PL
6C	058710A	Various	4th	.075/1.9	84-On	3	SAS - 38T - OD: 4.323" - PL

FRICTION CLUTCHES - HI-PERFORMANCE - Red Eagle®

ILL	ALTO No.	REF No.	Description	Spec	Year	Qty	Notes
1G	058740-190	NA	1st, 2nd, 3rd, 4th	.075/1.9	84-On	AR	Red - 41T - OD: 4.323" - SM

STEEL CLUTCHES

ILL	ALTO No.	REF No.	Description	Spec	Year	Qty	Notes
7D	058711	22543-PC9-000	1st - except below	.078/2.0	84-On	3	8T - ID: 3.230"
7D	058713	22543-PH0-850	1st - L4, ML4A, P1	.063/1.6	88-91	3	8T - ID: 3.230"
7D	058713A160	22543-P4R-003	Low - Civic	.063/1.6	96-On	3	18T - ID:3.229"
8B	058711	22543-PC9-000	2nd	.078/2.0	84-On	3	8T - ID: 3.230"
8B	058713A	22643-P4R-003	2nd - Civic	.079/2.0	96-On	3	18T - ID:3.229"
9E	058711	22543-PC9-000	3rd	.078/2.0	84-On	3	8T - ID: 3.230"
9E	058713A	22643-P4R-003	3rd - Civic	.079/2.0	96-On	3	18T - ID:3.229"
10C	058711	22543-PC9-000	4th	.078/2.0	84-On	3	8T - ID: 3.230"
10C	058713A	22643-P4R-003	4th - Civic	.079/2.0	96-On	3	18T - ID:3.229"
N I	058711-210	22543-PJ4-000	1st, 2nd, 3rd & 4th - selective	.083/2.1	84-On	AR	8T - ID: 3.230"
N I	058711A	NA	1st, 2nd, 3rd & 4th - selective	.070/1.8	84-On	AR	8T - ID: 3.230"

HONDA

4 SPEED 1984-On

2 SHAFT (110mm Clutch)

STEEL CLUTCHES - HI-PERFORMANCE - Kolene®

ILL	ALTO No.	REF No.	Description	Spec	Year	Qty	Notes
7D	058711K200	NA	1st, 2nd, 3rd, 4th	.078/2.0	84-On	AR	Kol - 8T - ID: 3.230"
7D	058713AK160	NA	1st - L4, ML4A, P1	.063/1.6	88-91	3	Kol - 8T - ID: 3.230"
8B	058713AK200	NA	2nd, 3rd, 4th - Civic	.079/2.0	96-On	AR	Kol - 18T - ID:3.229"

OEI® Original Equipment Improvements

ILL	ALTO No.	REF No.	Description	Spec	Year	Qty	Notes
N I	058767-110	NA	DrumSaver® replaces belleville spring		84-On	AR	

FILTERS

ILL	ALTO No.	REF No.	Description	Spec	Year	Qty	Notes
N I	058942	25420-PC9-010	Filter - all except below		84-On	1	
N I	058944	25420-PL4-010	Filter - P1		88-89	1	
N I	058945A	25420-P56-003	Filter - Civic A4RA, B4RA		96-98	1	
N I	058945B	25420-P4R-013	Filter - BMXA, SLXA		99-On	1	

METAL CLAD SEALS

ILL	ALTO No.	REF No.	Description	Spec	Year	Qty	Notes
11A	047401	91207-639-015	Converter Housing		84-On	1	
12A	058400	91206-PC9-005	Left Axle - AS, Civic CA	76mm	84-87	1	
12A	TBA	91205-PL3-A02	Left Axle - Civic (all)	56mm	88-On	1	
12A	058400A	91206-PC9-711	Left Axle - Integra CA	76mm	86-87	1	
12A	058402E	91205-PL3-B02	Left Axle - Integra P1	56mm	88-89	1	
13G	058402	91205-PC9-005	Right Axle - AS, Civic CA	62mm	84-87	1	
13G	058402C	91206-689-005	Right Axle - Civic (all)	76mm	88-On	1	
13G	058402A	91205-PC9-711	Right Axle - Integra CA	62mm	86-87	1	
13G	058402D	91206-PC8-005	Right Axle - Integra P1	76mm	88-89	1	
N I	047415	91209-551-015	Speedometer		84-On	1	
N I	058401	91201-PA9-004	Throttle Shaft	18mm	84-On	1	
N I	047410	91209-612-003	Manual Lever	22mm	84-On	1	

SEALING RINGS

ILL	ALTO No.	REF No.	Description	Spec	Year	Qty	Notes
KT	058601	NA	Sealing Ring Kit - 3M		84-On	1	
14B	058100	22814-PA9-023	Mainshaft	32mm	84-On	3	

HONDA

4 SPEED 1985-98
2 SHAFT (116mm Clutch)

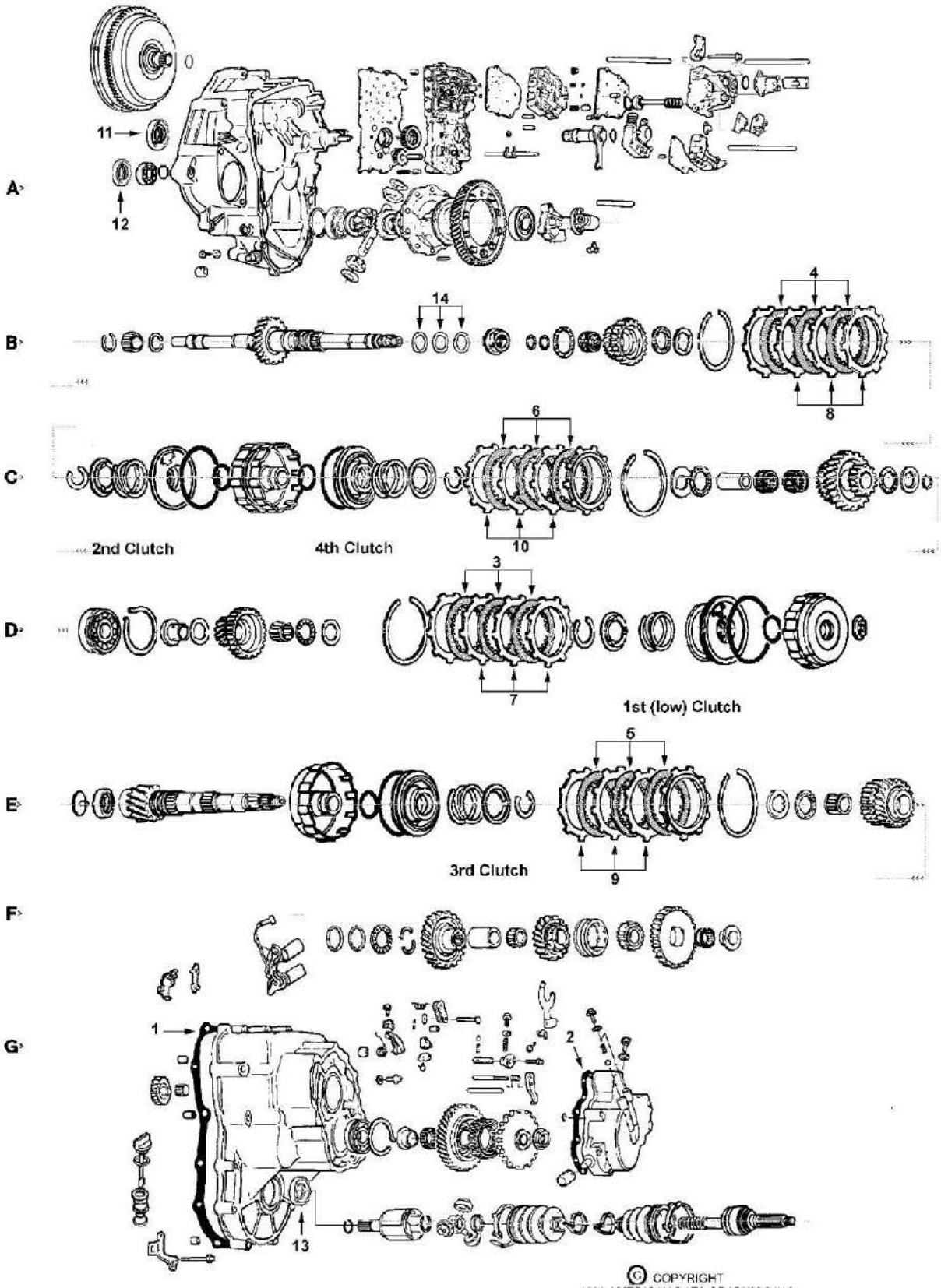

© COPYRIGHT
1999 AMERICAN DATA GRAPHICS, INC.

HONDA

4 SPEED 1985-98

2 SHAFT (116mm Clutch)

KITS

*Add Suffix SK for Super Kit

ILL	Description	Years	Friction Module	Steel Module	Overhaul Kit	Banner Kit	Master Kit
KT	Rebuilding Kit - HONDA ACCORD PF4 (F4)	86-89	058752C	058753D	058802B	058905LS	058905
KT	Rebuilding Kit - HONDA PRELUDE F4 (Fuel Inj)	85-87	058752C	058753D	058802B	058905LS	058905
KT	Rebuilding Kit - HONDA PRELUDE K4, PY8A, MY8A	88-91	058752C	058753D	058810	058905BLS	058905B
KT	Rebuilding Kit - ACURA LEGEND G4, L5, PL5X	86-90	058752D	058753E	058806	058905ALS	058905A
KT	Rebuilding Kit - ACURA VIGOR MPWA	92-94	058752K	058753K	058812	058905DLS	058905D
KT	Rebuilding Kit - ACURA 2.5TL M1WA	95-98	058752K	058753K	058812A	058905HLS	058905H

MISCELLANEOUS GASKETS & KIT COMPONENTS

ILL	ALTO No.	REF No.	Description	Spec	Year	Qty	Notes
1G	TBA	21811-PF4-000	Gasket, Case - PF4 (F4)		85-89	1	
1G	TBA	21811-PK4-000	Gasket, Case - K4		88-89	1	
1G	TBA	21811-PY8-S10	Gasket, Case - PY8A, MY8A		90-91	1	
1G	TBA	21811-PG4-010	Gasket, Case - G4		86-87	1	
1G	TBA	21811-PL5-020	Gasket, Case - L5, PL5X		88-90	1	
1G	TBA	21811-PW7-000	Gasket, Case - MPWA, M1WA		92-98	1	
2G	TBA	21812-PF4-000	Gasket, Right Side - PF4 (F4)		85-89	1	
2G	TBA	21812-PK4-S00	Gasket, Right Side - K4, PY8A, MY8A		88-91	1	
2G	TBA	21812-PG4-010	Gasket, Right Side - G4		86-87	1	
2G	TBA	21812-PL5-S00	Gasket, Right Side - L5, PL5X		86-90	1	
2G	TBA	21812-PW7-000	Gasket, Right Side - MPWA, M1WA		92-98	1	
N I	TBA	21813-PW7-000	Gasket, Oil Pan - MPWA, M1WA		92-98	1	

FRICTION CLUTCHES

ILL	ALTO No.	REF No.	Description	Spec	Year	Qty	Notes
3D	058720G	Various	1st	.075/1.9	85-98	3-4	HEG - 41T - OD: 4.558" - PL
4B	058720G	Various	2nd except below	.075/1.9	85-91	3-4	HEG - 41T - OD: 4.558" - PL
5E	058720G	Various	3rd	.075/1.9	85-98	3-4	HEG - 41T - OD: 4.558" - PL
6C	058720G	Various	4th	.075/1.9	85-98	3-4	HEG - 41T - OD: 4.558" - PL

STEEL CLUTCHES

ILL	ALTO No.	REF No.	Description	Spec	Year	Qty	Notes
7D	058721	22543-PF4-000	1st	.078/2.0	85-98	3-4	10T - ID: 3.438"
8B	058721	22543-PF4-000	2nd except below	.078/2.0	85-98	3-4	10T - ID: 3.438"
8B	058723-230	22544-PR0-000	2nd - MPWA, M1WA	.091/2.3	92-98	4	24T - ID: 3.438"
9E	058721	22543-PF4-000	3rd	.078/2.0	85-98	3-4	10T - ID: 3.438"
10C	058721	22543-PF4-000	4th - except below	.078/2.0	85-98	3-4	10T - ID: 3.438"
10C	058723-230	22544-PR0-000	4th - MPWA, M1WA	.091/2.3	92-98	4	24T - ID: 3.438"
N I	058721-210	NA	1st, 2nd, 3rd & 4th - selective	.083/2.1	85-98	AR	10T - ID: 3.438"
N I	058721-260	NA	1st, 2nd, 3rd & 4th - selective	.102/2.6	85-98	AR	10T - ID: 3.438"
N I	058721A	NA	1st, 2nd, 3rd & 4th - selective	.070/1.8	85-98	AR	10T - ID: 3.438"

STEEL CLUTCHES - HI-PERFORMANCE - Kolene®

ILL	ALTO No.	REF No.	Description	Spec	Year	Qty	Notes
7D	058721K200	NA	1st, 2nd, 3rd & 4th	.078/2.0	85-98	3-4	Kol - 10T - ID: 3.438"

OEI® Original Equipment Improvements

ILL	ALTO No.	REF No.	Description	Spec	Year	Qty	Notes
N I	058767-116	NA	DrumSaver® replaces belleville spring		85-98	AR	

HONDA

4 SPEED 1985-98

2 SHAFT (116mm Clutch)

FILTERS

ILL	ALTO No.	REF No.	Description	Spec	Year	Qty	Notes
N I	058942	25420-PC9-010	Filter - F4 (Accord, Prelude)		85-89	1	
N I	058946	25420-PL5-000	Filter - G4, L5, PL5X (Legend)		86-90	1	
N I	TBA	25420-PK4-000	Filter - K4 (Prelude)		88-89	1	
N I	TBA	25420-PY8-000	Filter - MY8A, PY8A (Prelude)		90-91	1	
N I	058944B	25420-PW4-000	Filter - MPWA, M1WA		92-98	1	

METAL CLAD SEALS

ILL	ALTO No.	REF No.	Description	Spec	Year	Qty	Notes
11A	047401	91207-639-015	Converter Housing - except Legend		85-98	1	
11A	058400B	91207-PG4-005	Converter Housing - Legend		86-90	1	
12A	058400A	91206-PC9-711	Left Axle - PF4 (F4)	76mm	85-89	1	Accord/Prelude
12A	058402B	91205-PC8-935	Left Axle - K4	54mm	88-89	1	Prelude
12A	TBA	91205-PL3-A02	Left Axle -PY8A, MY8A	54mm	90-91	1	Prelude
12A	058401A	91206-PG2-005	Left Axle - G4, L5, PL5X	56mm	86-90	1	Legend
12A	TBA	91206-PW5-015	Left Axle - MPWA, M1WA	56mm	92-98	1	Vigor/2.5TL
13G	058402A	91205-PC9-711	Right Axle - PF4 (F4)	62mm	85-89	1	Accord/Prelude
13G	058402F	91206-PK4-003	Right Axle - K4, PY8A, MY8A	66mm	88-91	1	Prelude
13G	058401A	91206-PG2-005	Right Axle - G4, L5, PL5X	56mm	86-91	1	Legend
13G	TBA	91207-639-015	Right Axle - MPWA, M1WA	68mm	92-98	1	Vigor/2.5TL

SEALING RINGS

ILL	ALTO No.	REF No.	Description	Spec	Year	Qty	Notes
KT	058603	NA	Sealing Ring Kit - 6M		85-98	1	
14B	058103	22814-PF4-003	Mainshaft	35mm	85-98	3-4	Legend requires 4
15B	058104	22814-PK4-003	Mainshaft	29mm	85-98	1	

BUSHINGS

ILL	ALTO No.	REF No.	Description	Spec	Year	Qty	Notes
KT	058625	NA	Bushing Kit		85-98	1	3 Bushings

HONDA

4 SPEED 1991-On
2 SHAFT (125mm Clutch)

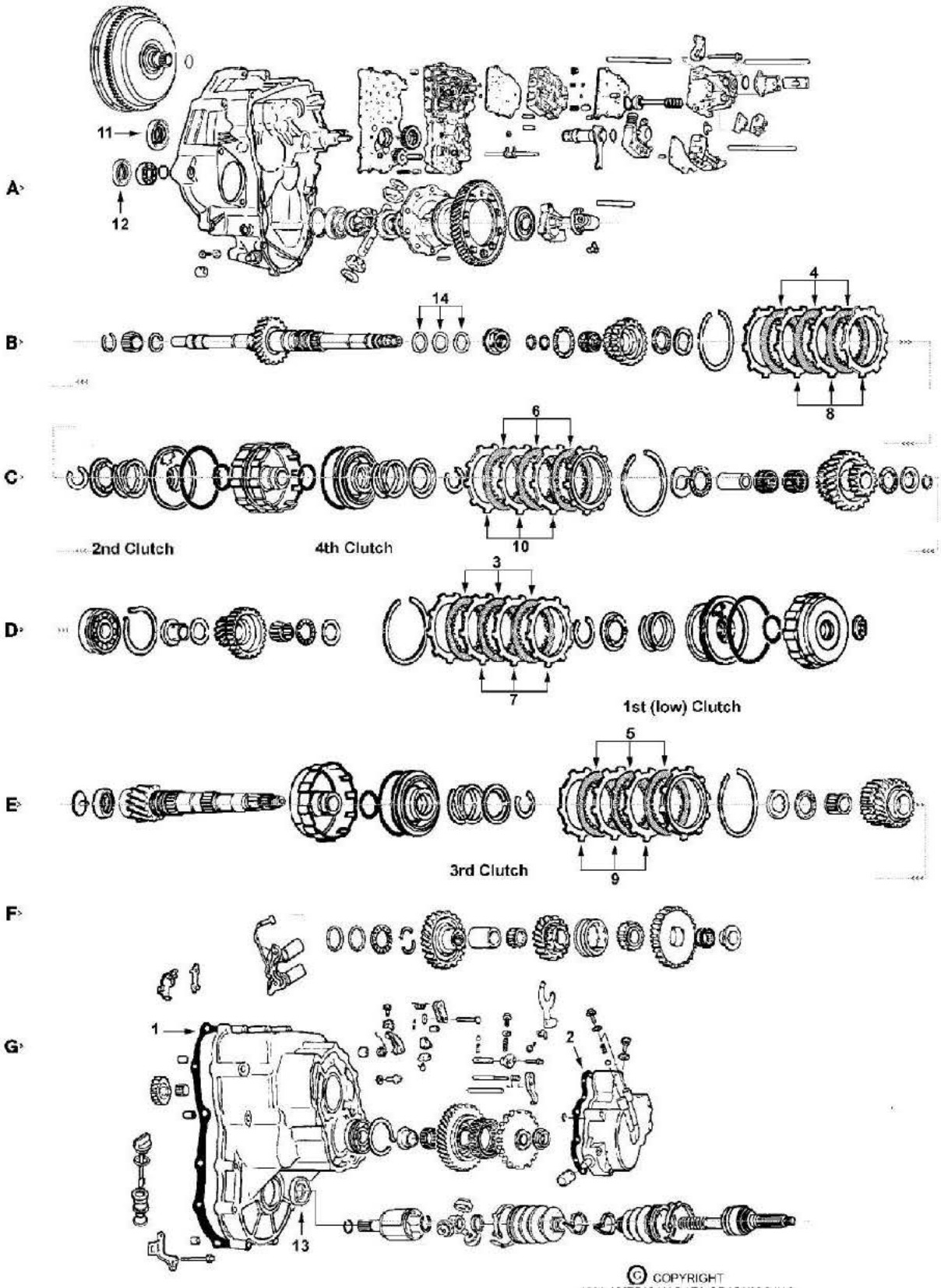

© COPYRIGHT
1999 AMERICAN DATA GRAPHICS, INC.

HONDA

4 SPEED 1991-On

2 SHAFT (125mm Clutch)

KITS

*Add Suffix SK for Super Kit

ILL	Description	Years	Friction Module	Steel Module	Overhaul Kit	Banner Kit	Master Kit
KT	Rebuilding Kit - ACURA LEGEND MPYA	91-95	101752	101753	101802	101901LS	101901A
KT	Rebuilding Kit - ACURA 3.2TL M5HA	96-98	101752A	101753A	101802	101903LS	101903
KT	Rebuilding Kit - ACURA 3.5RL M5DA	96-04	101752A	101753A	101802	101903LS	101903

MISCELLANEOUS GASKETS & KIT COMPONENTS

ILL	ALTO No.	REF No.	Description	Spec	Year	Qty	Notes
N I	TBA	21811-PY4-010	Gasket, Case - all		91-On	1	
N I	TBA	21812-PY4-000	Gasket, Right Side - all		91-On	1	
N I	101816	21813-PY4-000	Gasket, Oil Pan - MPYA		91-95	1	
N I	TBA	21813-P5H-000	Gasket, Oil Pan - M5DA, M5HA		96-On	1	

FRICTION CLUTCHES

ILL	ALTO No.	REF No.	Description	Spec	Year	Qty	Notes
N I	101700G	Various	1st	.078/2.0	91-On	4	HEG - 45T - OD: 5.041" - PL
N I	101700R	Various	2nd	.078/2.0	91-On	4	Red - 45T - OD: 5.041" - PL
N I	101700G235	22644-PY4-E01	3rd	.094/2.3	91-95	4	HEG - 45T - OD: 5.041" - PL
N I	101700R235	22644-P5D-003	3rd	.094/2.3	96-On	4	Red - 45T - OD: 5.041" - PL
N I	101700G235	22644-PY4-E01	4th	.094/2.3	91-95	4	HEG - 45T - OD: 5.041" - PL
N I	101700R235	22644-P5D-003	4th	.094/2.3	96-On	4	Red - 45T - OD: 5.041" - PL
N I	101700G	Various	Reverse	.078/2.0	91-On	4	HEG - 45T - OD: 5.041" - PL
N I	101700G	Various	Low-Hold	.078/2.0	91-On	4	HEG - 45T - OD: 5.041" - PL

STEEL CLUTCHES

ILL	ALTO No.	REF No.	Description	Spec	Year	Qty	Notes
N I	101701	22543-PY4-003	1st	.078/2.0	91-On	4	20T - ID: 3.756"
N I	101701	22543-PY4-003	2nd	.078/2.0	91-On	4	20T - ID: 3.756"
N I	101701-260	22643-PY4-003	3rd	.102/2.6	91-95	4	20T - ID: 3.756"
N I	101701	22543-PY4-003	3rd	.078/2.0	96-On	4	20T - ID: 3.756"
N I	101701-260	22643-PY4-003	4th	.102/2.6	91-On	4	20T - ID: 3.756"
N I	101701	22543-PY4-003	Reverse	.078/2.0	91-On	4	20T - ID: 3.756"
N I	101701	22543-PY4-003	Low-Hold	.078/2.0	91-On	4	20T - ID: 3.756"

FILTERS

ILL	ALTO No.	REF No.	Description	Spec	Year	Qty	Notes
N I	101940	25420-PY4-000	Filter		91-On	1	

METAL CLAD SEALS

ILL	ALTO No.	REF No.	Description	Spec	Year	Qty	Notes
N I	101400	91207-PR9-003	Converter Housing	70mm	91-On	1	
N I	101425	91205-PY5-003	Left Axle	61mm	91-On	1	
N I	101426	91201-PY5-003	Right Axle	75mm	91-On	1	
N I	047410	91209-612-003	Manual Lever	22mm	91-On	1	

HONDA

4 SPEED 1991-On

2 SHAFT (125mm Clutch)

SEALING RINGS

ILL	ALTO No.	REF No.	Description	Spec	Year	Qty	Notes
KT	101600	NA	Sealing Ring Kit - 6M		91-95	1	
KT	101600A	NA	Sealing Ring Kit - 6T		96-On	1	
N I	101100	22814-PR9-003	Mainshaft - Metal	37mm	91-95	4	
N I	101110	22814-P5H-003	Mainshaft - Teflon	37mm	96-On	4	
N I	101101	22814-PY4-003	Countershaft - Metal	42mm	91-95	2	
N I	101111	22815-P5H-003	Countershaft - Teflon	42mm	96-On	2	

HONDA

4 SPEED 1992-97

3 SHAFT (110mm Clutch)

A>

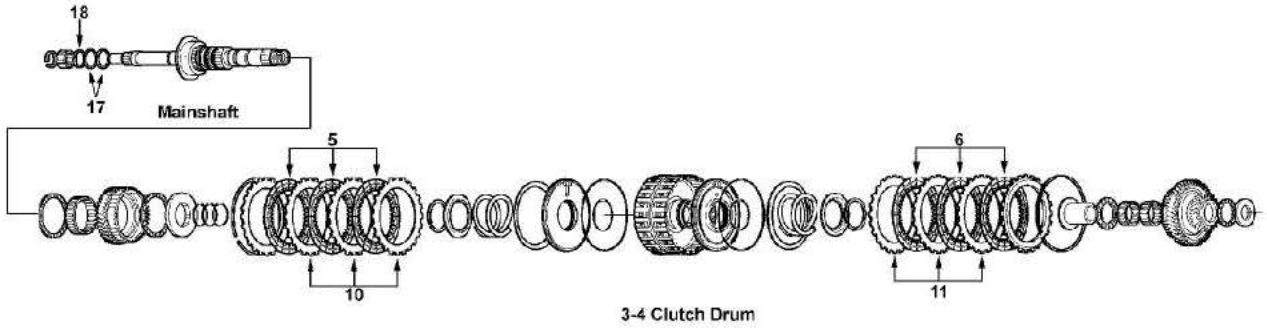

B>

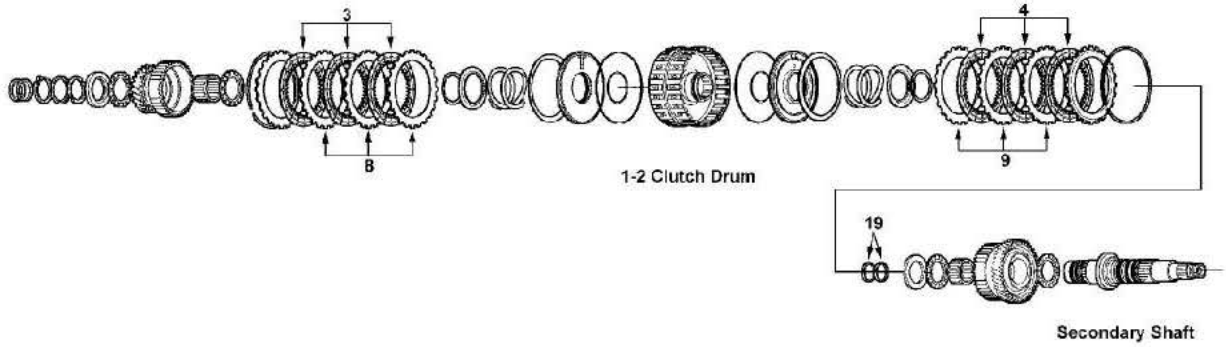

C>

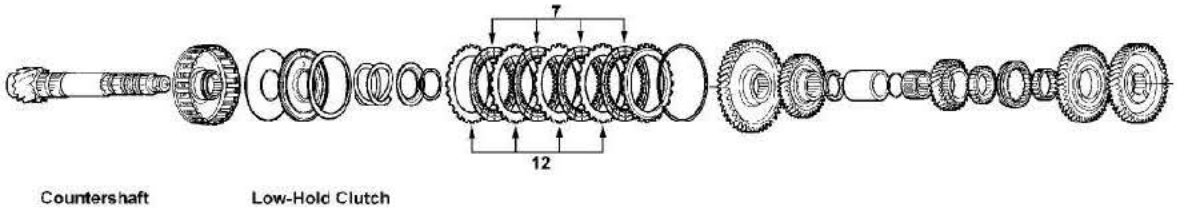

D>

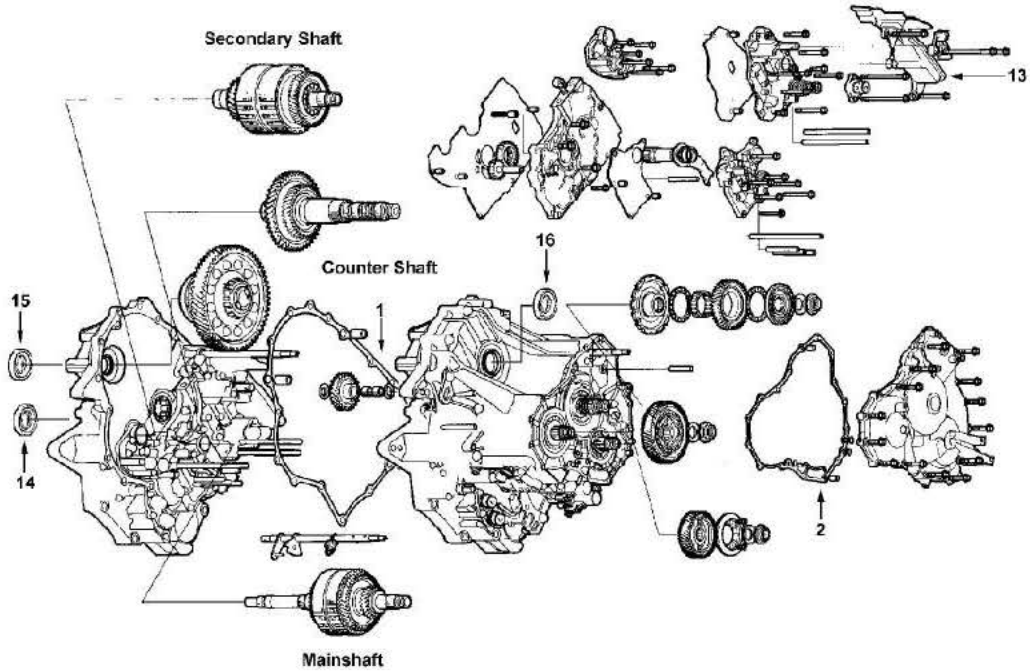

HONDA

4 SPEED 1992-97

3 SHAFT (110mm Clutch)

KITS

*Add Suffix SK for Super Kit

ILL	Description	Years	Friction Module	Steel Module	Overhaul Kit	Banner Kit	Master Kit
KT	Rebuilding Kit - HONDA CIVIC A24A, M24A, S24A	92-97	058752L	058753L	058802A	058903ELS	058903E

KITS - HI-PERFORMANCE Red Eagle®

ILL	Description	Years	Friction and Steel Module	Overhaul Kit	Banner Kit	Master Kit
KT	Rebuilding Kit - A24A, M24A, S24A	92-97	058750LA	058802AT	NA	058903EA

MISCELLANEOUS GASKETS & KIT COMPONENTS

ILL	ALTO No.	REF No.	Description	Spec	Year	Qty	Notes
1G	TBA	21811-P24-000	Gasket, Case - all		92-97	1	21811-P56-000 (combo)
2G	TBA	21812-P24-J01	Gasket, Side - all		92-97	1	

FRICTION CLUTCHES

ILL	ALTO No.	REF No.	Description	Spec	Year	Qty	Notes
3B	058710A	Various	1st (low)	.075/1.9	92-97	3	SAS - 38T - OD: 4.323" - PL
4B	058710A	Various	2nd	.075/1.9	92-97	3	SAS - 38T - OD: 4.323" - PL
5A	058710A	Various	3rd	.075/1.9	92-97	3	SAS - 38T - OD: 4.323" - PL
6A	058710A	Various	4th	.075/1.9	92-97	3	SAS - 38T - OD: 4.323" - PL
7C	058724	22544-P24-S00	Low-Hold	.078/2.0	92-97	3	Tan - 38T - OD: 3.928" - PL

FRICTION CLUTCHES - HI-PERFORMANCE - Red Eagle®

ILL	ALTO No.	REF No.	Description	Spec	Year	Qty	Notes
3B	058740-190	NA	1st, 2nd, 3rd, 4th	.075/1.9	89+	AR	Red - 41T - OD: 4.323" - SM
7C	058744-198	NA	Low-Hold	.078/2.0	89+	AR	Red - 38T - OD: 3.928" - PL

STEEL CLUTCHES

ILL	ALTO No.	REF No.	Description	Spec	Year	Qty	Notes
8B	058713	22543-PH0-850	1st (low)	.063/1.6	92-97	3	8T - ID: 3.230"
9B	058711	22543-PC9-000	2nd	.078/2.0	92-97	3	8T - ID: 3.230"
10A	058711	22543-PC9-000	3rd	.078/2.0	92-97	3	8T - ID: 3.230"
11A	058711	22543-PC9-000	4th	.078/2.0	92-97	3	8T - ID: 3.230"
12C	058725	22543-PS5-003	Low-Hold	.078/2.0	92-97	3	18T - ID: 2.800"

STEEL CLUTCHES - HI-PERFORMANCE - Kolene®

ILL	ALTO No.	REF No.	Description	Spec	Year	Qty	Notes
9B	058711K200	NA	2nd, 3rd, 4th	.078/2.0	92-97	3	Kol - 8T - ID: 3.230"
12C	058725K200	NA	Low-Hold	.078/2.0	92-97	3	Kol - 18T - ID: 2.800"

FILTERS

ILL	ALTO No.	REF No.	Description	Spec	Year	Qty	Notes
13D	058942A	25420-P24-J01	Filter		92-97	1	

METAL CLAD SEALS

ILL	ALTO No.	REF No.	Description	Spec	Year	Qty	Notes
14D	047401	91207-639-015	Converter Housing		92-97	1	
15D	TBA	91205-PL3-A02	Left Axle	54mm	92-97	1	
16D	058402C	91206-689-005	Right Axle	76mm	92-97	1	
N I	047415	91209-551-015	Speedometer		92-97	1	
N I	058401	91201-PA9-004	Throttle Shaft	18mm	92-97	1	
N I	047410	91209-612-003	Manual Lever	22mm	92-97	1	

HONDA

4 SPEED 1992-97

3 SHAFT (110mm Clutch)

SEALING RINGS

ILL	ALTO No.	REF No.	Description	Spec	Year	Qty	Notes
KT	058603	NA	Sealing Ring Kit - 6M		92-97	1	
17A	058103	22814-PF4-003	Mainshaft	35mm	92-97	3	
18A	058104	22814-PK4-003	Mainshaft	29mm	92-97	1	

BUSHINGS

ILL	ALTO No.	REF No.	Description	Spec	Year	Qty	Notes
KT	058625A	NA	Bushing Kit - A24A, M24A, S24A		92-97	1	

HONDA

4 SPEED 1990-On

3 SHAFT (116mm Clutch)

A>

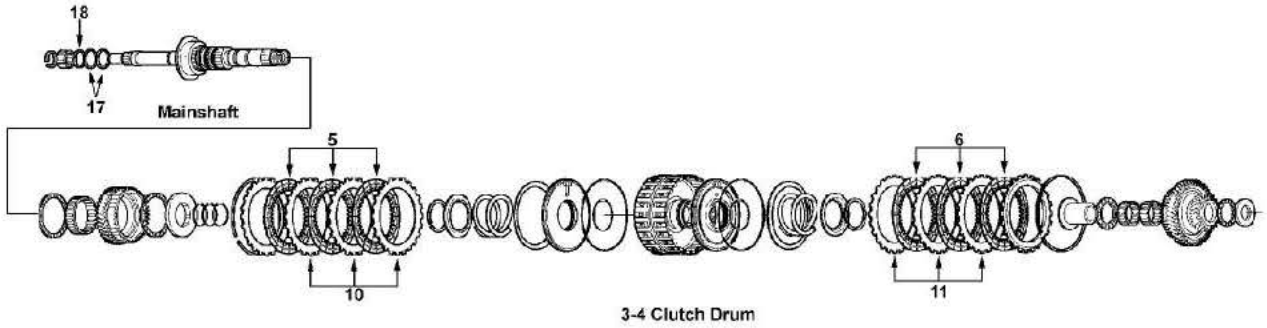

B>

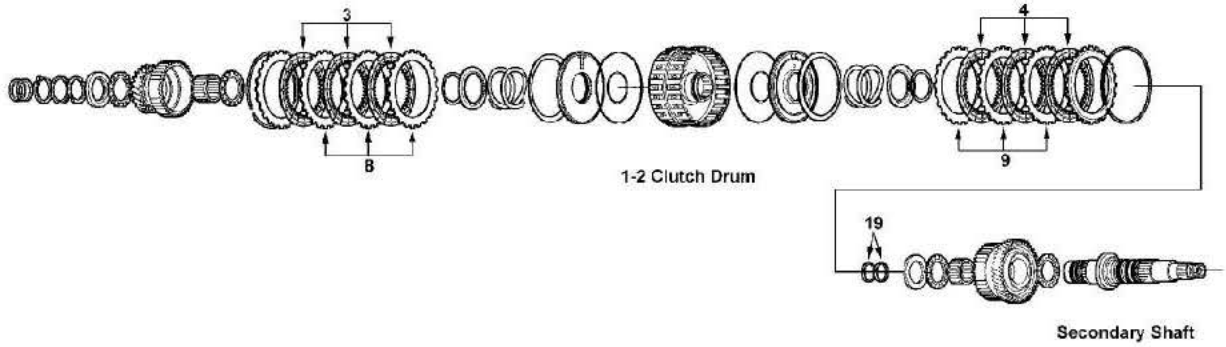

C>

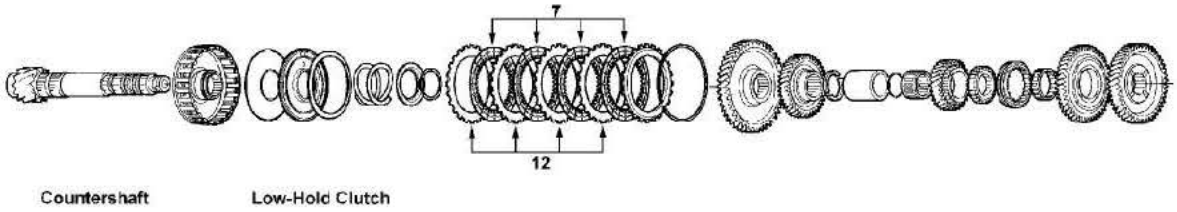

D>

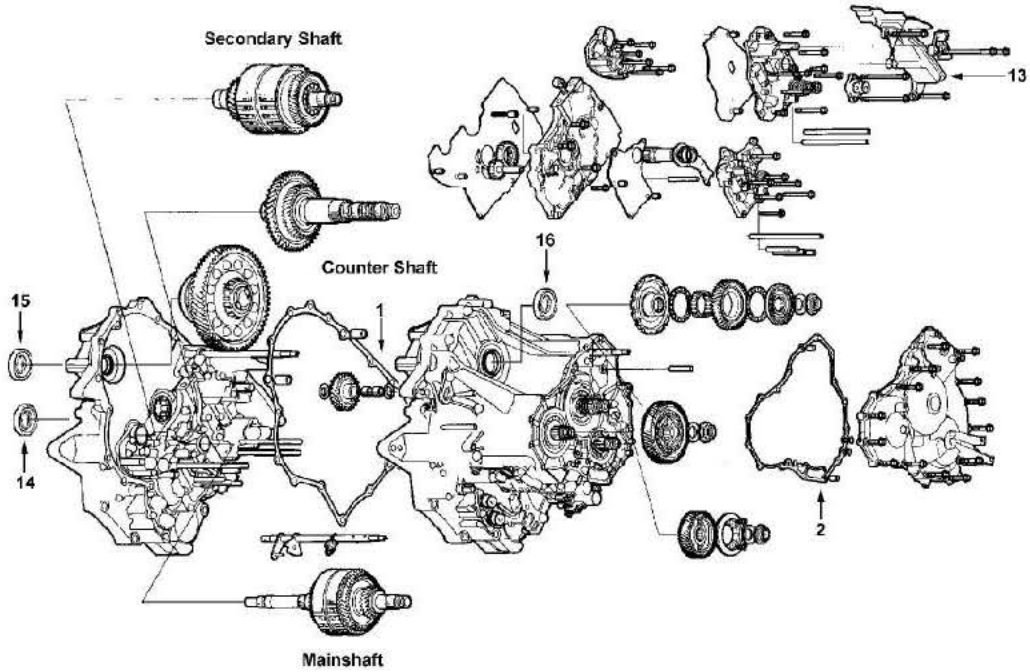

HONDA

4 SPEED 1990-On
3 SHAFT (116mm Clutch)

KITS

*Add Suffix SK for Super Kit

ILL	Description	Years	Friction Module	Steel Module	Overhaul Kit	Banner Kit	Master Kit
KT	Rebuilding Kit - HONDA CR-V M4TA, MDMA, MDLA	97-On	058752N	058753N	058804C	058905GLS	058905G
KT	Rebuilding Kit - ACURA INTEGRA RO	90	058752C	058753G	058804B	058905CLS	058905C
KT	Rebuilding Kit - ACURA INTEGRA MPRA	91-93	058752C	058753H	058804B	058905CLS	058905E
KT	Rebuilding Kit - ACURA INTEGRA Combo RO, MPRA	90-93	058752C	058753J	058804B	058905CLS	058905EX
KT	Rebuilding Kit - ACURA INTEGRA MP7A, SP7A	94-95	058752M	058753M	058804C	058905FLS	058905F
KT	Rebuilding Kit - ACURA INTEGRA S4XA, SKWA	96-On	058752N	058753N	058804C	058905GLS	058905G

MISCELLANEOUS GASKETS & KIT COMPONENTS

ILL	ALTO No.	REF No.	Description	Spec	Year	Qty	Notes
1D	TBA	21811-P24-000	Gasket, Case - all except below		92-On	1	21811-P56-000 (combo)
1D	TBA	21811-P4T-000	Gasket, Case - MDMA, M4TA		97-On	1	4wd only
1D	TBA	21811-PR0-010	Gasket, Case - RO, MPRA		90-93	1	
2D	TBA	21812-P24-J01	Gasket, Side - all except below		92-On	1	
2D	TBA	21812-PR0-010	Gasket, Side - RO, MPRA		90-93	1	

FRICTION CLUTCHES

ILL	ALTO No.	REF No.	Description	Spec	Year	Qty	Notes
3B	058720G	Various	1st (low) - R0, MPRA, MP7A, SP7A	.075/1.9	90-95	3	HEG - 41T - OD: 4.558" - PL
3B	058730G	Various	1st (low)	.075/1.9	96-On	3	HEG - 38T - OD: 4.558" - PL
4B	058720G	Various	2nd - R0 & MPRA	.075/1.9	90-93	3	HEG - 41T - OD: 4.558" - PL
4B	058730A	Various	2nd	.075/1.9	94-On	3	SAS - 38T - OD: 4.558" - PL
5A	058720G	Various	3rd - R0 & MPRA	.075/1.9	90-93	3	HEG - 41T - OD: 4.558" - PL
5A	058730A	Various	3rd	.075/1.9	94-On	3	SAS - 38T - OD: 4.558" - PL
6A	058720G	Various	4th - R0 & MPRA	.075/1.9	90-93	3	HEG - 41T - OD: 4.558" - PL
6A	058730A	Various	4th	.075/1.9	94-On	3	SAS - 38T - OD: 4.558" - PL
7C	058720G	Various	Low-Hold	.075/1.9	90-93	3	HEG - 41T - OD: 4.558" - PL
7C	058724	22544-P24-S00	Low-Hold	.078/2.0	94-On	3	Tan - 38T - OD: 3.928" - PL

FRICTION CLUTCHES - HI-PERFORMANCE - Red Eagle®

ILL	ALTO No.	REF No.	Description	Spec	Year	Qty	Notes
7C	058744-198	NA	Low-Hold	.078/2.0	94-On	3	Tan - 38T - OD: 3.928" - PL

STEEL CLUTCHES

ILL	ALTO No.	REF No.	Description	Spec	Year	Qty	Notes
8B	058721	22543-PF4-000	1st (low) - R0, MPRA, MP7A, SP7A	.078/2.0	90-95	3	10T - ID: 3.438"
8B	058731-160	22543-P4X-000	1st (low)	.063/1.6	96-On	3	10T - ID: 3.220"
9B	058721	22543-PF4-000	2nd - R0, MPRA	.078/2.0	90-93	3	10T - ID: 3.438"
9B	058731	22543-P56-N00	2nd	.078/2.0	94-On	3	10T - ID: 3.220"
10A	058721	22543-PF4-000	3rd - R0, MPRA	.078/2.0	90-93	3	10T - ID: 3.438"
10A	058731	22543-P56-N00	3rd	.078/2.0	94-On	3	10T - ID: 3.220"
11A	058721	22543-PF4-000	4th- R0, MPRA	.078/2.0	90-93	3	10T - ID: 3.438"
11A	058731	22543-P56-N00	4th	.078/2.0	94-On	3	10T - ID: 3.220"
12C	058723-300	22644-PR0-003	Low-Hold - R0	.118/3.0	90	3	24T - ID: 3.438"
12C	058723-200	22643-PR0-003	Low-Hold - MPRA	.078/2.0	91-93	3	24T - ID: 3.438"
12C	058725	22543-PS5-003	Low-Hold	.078/2.0	94-95	3	18T - ID: 2.800"
12C	058725-160	22543-PS5-013	Low-Hold	.063/1.6	96-On	3	18T - ID: 2.800"

HONDA

4 SPEED 1990-On
3 SHAFT (116mm Clutch)

STEEL CLUTCHES - HI-PERFORMANCE - Kolene®

ILL	ALTO No.	REF No.	Description	Spec	Year	Qty	Notes
8B	058721K200	NA	1st, 2nd, 3rd & 4th	.078/2.0	90-95	AR	Kol - 10T - ID: 3.438"
12C	058725K200	NA	Low-Hold	.078/2.0	94-95	3	Kol - 18T - ID: 2.800"

OEI® Original Equipment Improvements

ILL	ALTO No.	REF No.	Description	Spec	Year	Qty	Notes
N I	058767-116	NA	DrumSaver® replaces belleville spring		90-On	1	

FILTERS

ILL	ALTO No.	REF No.	Description	Spec	Year	Qty	Notes
13D	058944A	25420-PR0-030	Filter - Integra RO		90	1	
13D	TBA	25420-PR0-020	Filter - Integra		91-93	1	
13D	058945A	25420-P56-003	Filter - Integra (94-On), CRV (97-98)		94-On	1	
13D	058945	25420-P4R-003	Filter - CRV		99-On	1	
NI	116940	25420-P0Z-003	Filter - MPZA, M7ZA		95-97	1	

METAL CLAD SEALS

ILL	ALTO No.	REF No.	Description	Spec	Year	Qty	Notes
14D	047401	91207-639-015	Converter Housing		90-On	1	
15D	058401A	91206-PG2-005	Left Axle - Integra	56mm	90-93	1	
15D	TBA	91205-PL3-A02	Left Axle - Integra, CRV	54mm	94-On	1	
16D	058402D	91206-PC8-005	Right Axle - all	76mm	90-On	1	
N I	047415	91209-551-015	Speedometer		90-On	1	
N I	058401	91201-PA9-004	Throttle Shaft	18mm	90-On	1	
N I	047410	91209-612-003	Manual Lever	22mm	90-On	1	

SEALING RINGS

ILL	ALTO No.	REF No.	Description	Spec	Year	Qty	Notes
KT	058603	NA	Sealing Ring Kit - 6M		90-95	1	
KT	058603A	NA	Sealing Ring Kit - 4T		96-On	1	
17A	058103	22814-PF4-003	Mainshaft - Metal	35mm	90-95	2-3	
17A	058113	22814-P4P-003	Mainshaft - Teflon	35mm	96-On	3	
18A	058104	22814-PK4-003	Mainshaft - Metal	29mm	90-95	1	
18A	058114	22815-P4P-003	Mainshaft - Teflon	29mm	96-On	1	
19B	058105	22814-PR0-003	Secondary Shaft - Integra only	27mm	90-On	3	Not in Kit

HONDA

4 SPEED 1990-On
3 SHAFT (120mm Clutch)

A>

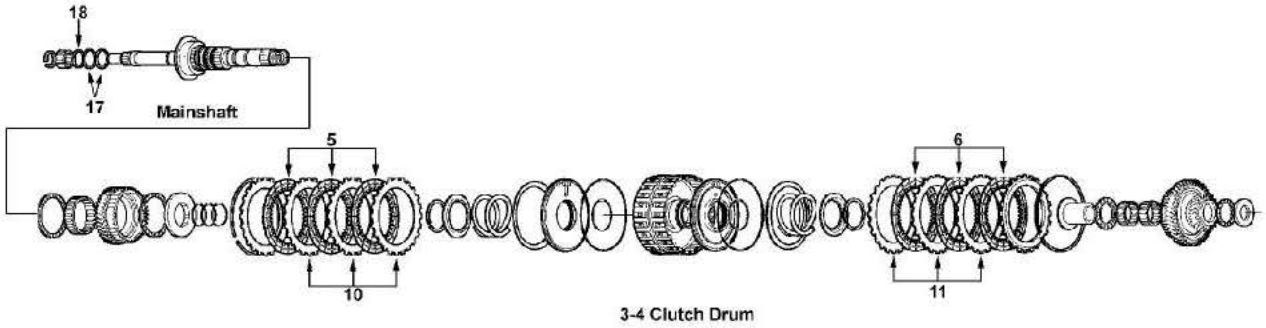

B>

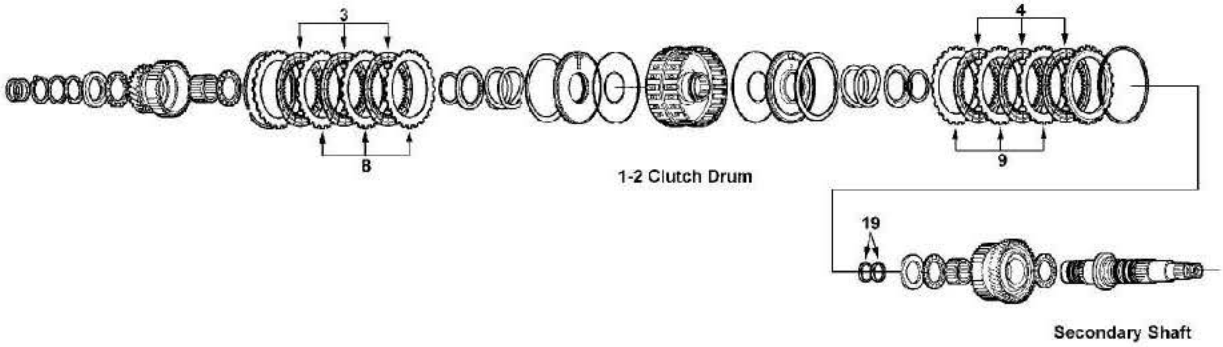

C>

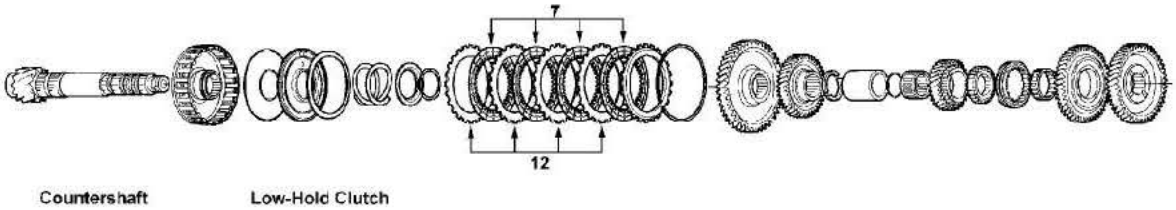

D>

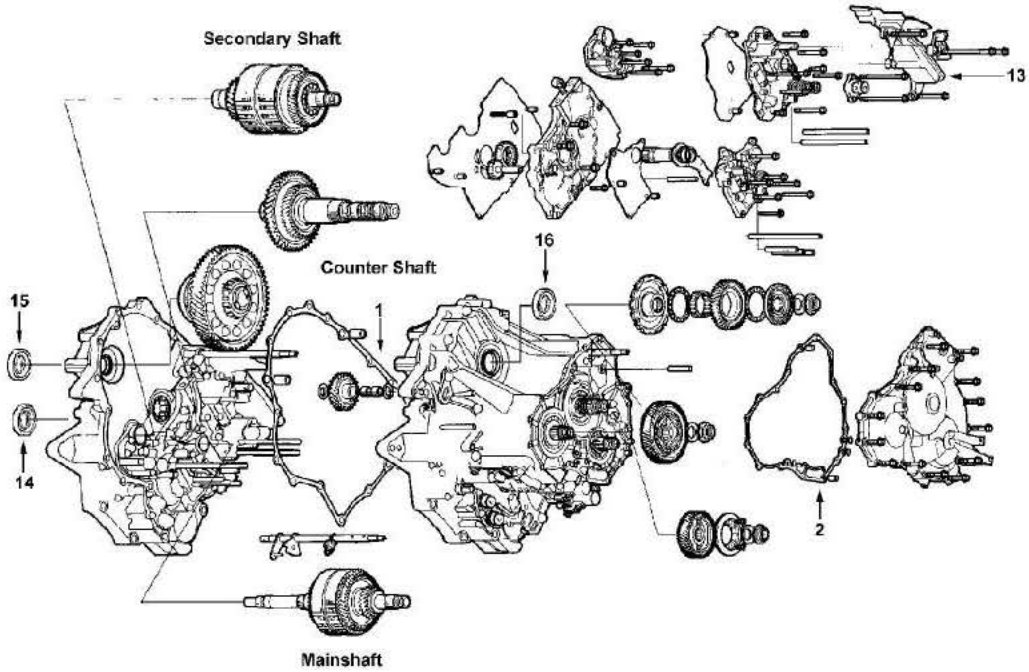

HONDA

4 SPEED 1990-On
3 SHAFT (120mm Clutch)

KITS

*Add Suffix SK for Super Kit

ILL	Description	Years	Friction Module	Steel Module	Overhaul Kit	Banner Kit	Master Kit
KT	Rebuilding Kit - HONDA ACCORD APXA, AOYA, MPOA, MPWA, MPXA, PX4B	90-97	078752	078753	078804	078901LS	078901
KT	Rebuilding Kit - HONDA ACCORD BOYA	96-97	078752	078753D	078804	078901BLS	078901B
KT	Rebuilding Kit - HONDA ACCORD B7XA (V6 Eng.)	98-01	078752D	078753E	078804A	078901CLS	078901C
KT	Rebuilding Kit - HONDA ODYSSEY 2.2L MPJA	95-97	078752	078753D	078804	078901BLS	078901B
KT	Rebuilding Kit - PRELUDE MP1A	92-96	078752A	078753A	078804	078901ALS	078901A
KT	Rebuilding Kit - ACURA 2.2CL A6VA	97	078752	078753D	078804	078901BLS	078901B
KT	Rebuilding Kit - ACURA 3.0CL M7ZA	97-00	078752D	078753E	078804A	078901CLS	078901C
KT	Rebuilding Kit - ISUZU OASIS	95-97	078752	075753D	078804	078901BLS	078901B

MISCELLANEOUS GASKETS & KIT COMPONENTS

ILL	ALTO No.	REF No.	Description	Spec	Year	Qty	Notes
1D	TBA	21811-P0X-000	Gasket, Case - all except below		90-97	1	
1D	TBA	21811-P7Z-000	Gasket, Case - B7XA, M7ZA		97-On	1	
2D	TBA	21812-P0X-000	Gasket, Side - all except below		90-97	1	
2D	TBA	21812-PX4-000	Gasket, Side - PX4B		90	1	
2D	TBA	21812-P7Z-000	Gasket, Side - B7XA, M7XA		97-On	1	

FRICTION CLUTCHES

ILL	ALTO No.	REF No.	Description	Spec	Year	Qty	Notes
3B	078700A	Various	1st (low)	.075/1.9	90-On	3/6*	SAS - 44T - OD: 4.732" - PL
4B	078700A	Various	2nd	.075/1.9	90-On	3-4/6*	SAS - 44T - OD: 4.732" - PL
5A	078700A	Various	3rd	.075/1.9	90-On	3/4*	SAS - 44T - OD: 4.732" - PL
6A	078700A	Various	4th	.075/1.9	90-On	3/4*	SAS - 44T - OD: 4.732" - PL
7C	078700A	Various	Low-Hold	.075/1.9	90-On	3	SAS - 44T - OD: 4.732" - PL

STEEL CLUTCHES

ILL	ALTO No.	REF No.	Description	Spec	Year	Qty	Notes
8B	078701	Various	1st (low)	.078/2.0	90-On	3/6*	24T - ID: 3.677"
8B	078701-160	22543-P0X-003	1st (low) - Prelude	.063/1.6	95-96	3	24T - ID: 3.677"
9B	078703	Various	2nd - all & Prelude S model	.102/2.6	90-On	3	24T - ID: 3.677"
9B	078701	Various	2nd - Prelude except S model	.078/2.0	92-96	3/6*	24T - ID: 3.677"
10A	078705	Various	3rd	.091/2.3	90-On	3/4*	24T - ID: 3.677"
11A	078705	Various	4th	.091/2.3	90-On	3	24T - ID: 3.677"
11A	078701	Various	4th	.078/2.0	97-On	4*	24T - ID: 3.677"
12C	078701	Various	Low-Hold	.078/2.0	92-95	3	24T - ID: 3.677"
12C	078701-160	22543-P0X-003	Low-Hold	.063/1.6	95-On	3	24T - ID: 3.677"
ALL	078701-210	NA	All - selective	.083/2.1	90-On	AR	24T - ID: 3.677"
ALL	078701A	NA	All - selective	.070/1.8	90-On	AR	24T - ID: 3.677"
			* Higher Qty used in B7XA & M7ZA				

OEI® Original Equipment Improvements

ILL	ALTO No.	REF No.	Description	Spec	Year	Qty	Notes
N I	078767	NA	DrumSaver® replaces belleville spring		90-On	AR	

HONDA

4 SPEED 1990-On
3 SHAFT (120mm Clutch)

FILTERS

ILL	ALTO No.	REF No.	Description	Spec	Year	Qty	Notes
13D	078940	25420-PX4-023	Filter - Accord		90-91	1	
13D	078942	25420-PX4-701	Filter - Accord, Prelude, Odyssey, 2.2CL		92-97	1	
NI	116940	25420-P0Z-003	Filter - M7ZA 3.0 CL		97-99	1	
NI	134940	25420-P7X-003	Filter - B7XA, M7ZA 3.0 CL		98-99	1	

METAL CLAD SEALS

ILL	ALTO No.	REF No.	Description	Spec	Year	Qty	Notes
14D	047401	91207-639-015	Converter Housing		90-On	1	
15D	058401A	91206-PG2-005	Left Axle - all except below	56mm	90-On	1	
15D	TBA	91205-PL3-A02	Left Axle - Odyssey	54mm	95-97	1	
16D	058402F	91206-PK4-003	Right Axle - all except below	66mm	90-On	1	
16D	TBA	91207-PH8-005	Right Axle - 3.0CL	54mm	97-00	1	
N I	047415	91209-551-015	Speedometer		90-On	1	
N I	058401	91201-PA9-004	Throttle Shaft	18mm	90-On	1	
N I	047410	91209-612-003	Manual Lever	22mm	90-On	1	

SEALING RINGS

ILL	ALTO No.	REF No.	Description	Spec	Year	Qty	Notes
KT	058603	NA	Sealing Ring Kit - 6M		90-95	1	works for all
KT	058603B	NA	Sealing RIng Kit - 5T		96-97	1	works for all
KT	119601	NA	Sealing Ring Kit - 3T/2P		98-On	1	works for all
17A	058103	22814-PF4-003	Mainshaft Large - Metal	35mm	90-95	3	
17A	058113	22814-P4P-003	Mainshaft Large - Teflon	35mm	96-97	3	
17A	058113A	22814-PAX-005	Mainshaft Large - Teflon	32mm	98-On	1	
18A	058104	22814-PK4-003	Mainshaft Small - Metal	29mm	90-95	1	
18A	058114	22815-P4P-003	Mainshaft Small - Teflon	29mm	96-On	1	
19B	058100	22814-PA9-003	Secondary Shaft - Metal	32mm	90-95	2	
19B	058113A	22814-P0X-003	Secondary Shaft - Teflon	32mm	96-97	2	
19B	058113B	22816-P6H-003	Secondary Shaft - Peak®	35mm	98-On	2	

ELECTRONIC CONTROL COMPONENTS

ILL	ALTO No.	REF No.	Description	Spec	Year	Qty	Notes
N I	146502A	28200-POZ-003	Solenoid - Shift B7XA, M7ZA		97-01	1	
N I	146503A	28250-P6H-024	Solenoid - Linear, dual B7XA, M7ZA		97-01	1	

HONDA

4 SPEED 1995-On

3 SHAFT (116, 120, 132mm Clutch)

A>

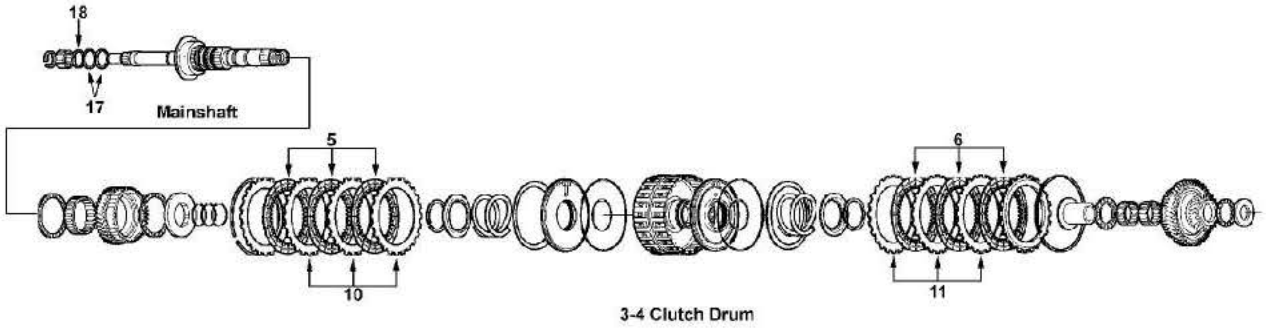

B>

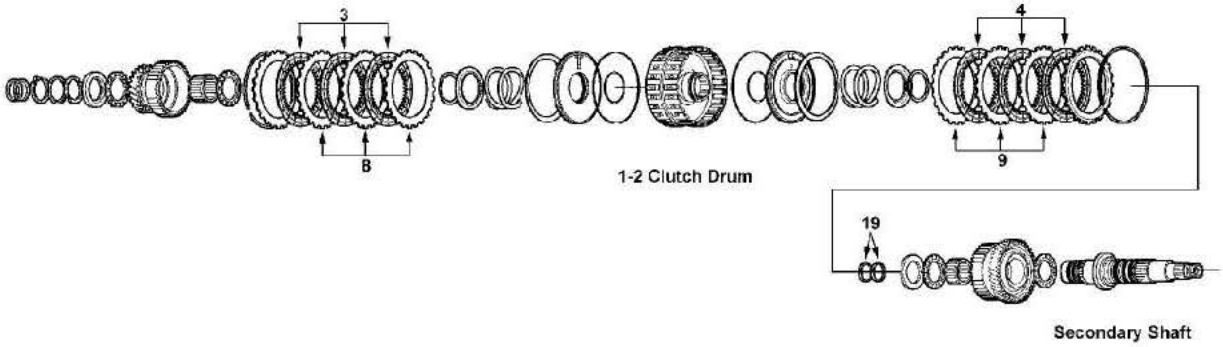

C>

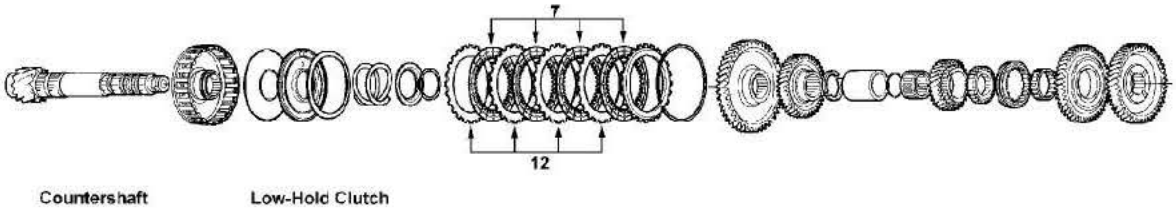

D>

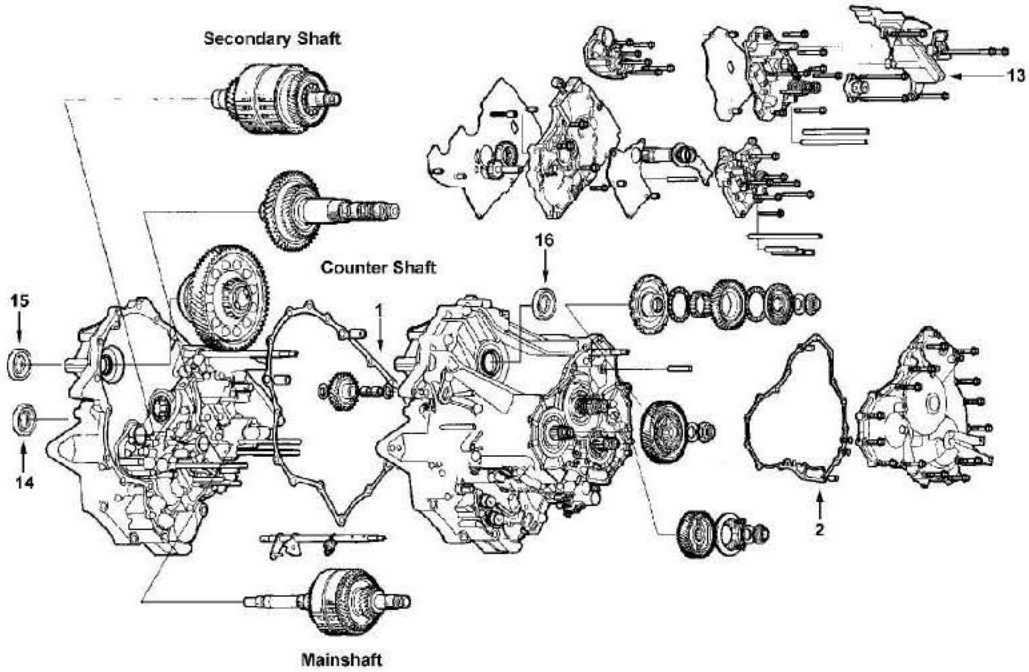

HONDA

4 SPEED 1995-On

3 SHAFT (116, 120, 132mm Clutch)

KITS

*Add Suffix SK for Super Kit

ILL	Description	Years	Friction Module	Steel Module	Overhaul Kit	Banner Kit	Master Kit
KT	Rebuilding Kit - HONDA ACCORD MPZA (V6 eng.)	95-97	116752	116753	116800	116901LS	116901
KT	Rebuilding Kit - HONDA ACCORD BAXA, MAXA (4 cyl. eng.)	98-02	119752	119753	119800	119901LS	119901
KT	Rebuilding Kit - HONDA ODYSSEY 2.3L MDWA	98	119752	119753	119800	119901LS	119901
KT	Rebuilding Kit - HONDA PRELUDE M6HA	97-01	119752	119753A	119800	119901LS	119901A
KT	Rebuilding Kit - ACURA 2.3CL B6VA	98-99	119752	119753A	119802	119903LS	119903
KT	Rebuilding Kit - ISUZU OASIS	98	119752	119753	119800	119901LS	119901

MISCELLANEOUS GASKETS & KIT COMPONENTS

ILL	ALTO No.	REF No.	Description	Spec	Year	Qty	Notes
1D	119816A	21811-P0Z-000	Gasket, Case - MPZA		95-97	1	
1D	119816	21811-P6H-000	Gasket, Case - all others		97-On	1	
2D	119818	21812-P0Z-000	Gasket, Side - MPZA		95-97	1	
2D	119818A	21812-PCJ-000	Gasket, Side - MAXA, MDWA, M6HA (97)		97-01	1	
2D	119818B	21812-P6H-000	Gasket, Side - BAXA, B6VA, M6HA (98+)		98-99	1	
N I	A50005	28200-P0Z-003	Gasket, Shift Solenoid Assembly- B7XA, MPZA, B7TA, B7YA		95-On	1	

FRICTION CLUTCHES - MPZA

ILL	ALTO No.	REF No.	Description	Spec	Year	Qty	Notes
3B	116702A	22544-P0Z-003	1st (low)	.075/1.9	95-97	4	SAS - 49T - OD: 5.190" - PL
4B	078700A	Various	2nd	.075/1.9	95-97	5	SAS - 44T - OD: 4.732" - PL
5A	078700A	Various	3rd	.075/1.9	90-97	4	SAS - 44T - OD: 4.732" - PL
6A	078700A	Various	4th	.075/1.9	90-97	4	SAS - 44T - OD: 4.732" - PL
7C	116700A	22674-P0Z-003	Low-Hold	.075/1.9	90-97	3	SAS - 44T - OD: 4.564" - PL

FRICTION CLUTCHES - MDWA, M6HA, B6VA, MAXA, BAXA

ILL	ALTO No.	REF No.	Description	Spec	Year	Qty	Notes
3B	119700A	Various	1st (low)	.077/1.96	97-02	6	SAS - 44T - OD: 4.560" - SB
4B	119700A	Various	2nd	.077/1.96	97-02	5	SAS - 44T - OD: 4.560" - SB
5A	078700A	Various	3rd	.076/1.94	97-02	3	SAS - 44T - OD: 4.732"
6A	078700A	Various	4th	.076/1.94	97-02	3	SAS - 44T - OD: 4.732"

STEEL CLUTCHES - MPZA

ILL	ALTO No.	REF No.	Description	Spec	Year	Qty	Notes
8B	116703	22543-P0Z-003	1st (low) MPZA	.078/2.0	95-97	4	18T - ID: 4.070"
9B	078701	Various	2nd MPZA	.078/2.0	95-97	5	24T - ID: 3.677"
10A	078701	Various	3rd MPZA	.078/2.0	95-97	4	24T - ID: 3.677"
11A	078701	Various	4th MPZA	.078/2.0	95-97	4	24T - ID: 3.677"
N I	078701-210	Various	2nd, 3rd, & 4th - MPZA selective	.083/2.1	95-97	AR	24T - ID: 3.677"
12C	116701	22683-P0Z-003	Low-Hold MPZA	.078/2.0	95-97	2	6T - ID: 3.680"
12C	116701-160	22681-P0Z-003	Low-Hold - MPZA selective	.063/1.6	95-97	AR	6T - ID: 3.680"
12C	116701-180	22682-P0Z-003	Low-Hold - MPZA selective	.070/1.8	95-97	AR	6T - ID: 3.680"
12C	116701-220	22683-P0Z-003	Low-Hold - MPZA selective	.087/2.2	95-97	AR	6T - ID: 3.680"
12C	116701-240	22684-P0Z-003	Low-Hold - MPZA selective	.094/2.4	95-97	AR	6T - ID: 3.680"

STEEL CLUTCHES

ILL	ALTO No.	REF No.	Description	Spec	Year	Qty	Notes
8B	119701	Various	1st (low) MDWA, M6HA, B6VA, MAXA, BAXA	.078/2.0	97-02	5	24T - ID: 3.600"
9B	119701-160	22543-P6H-003	2nd - B6VA & M6HA	.063/1.6	97-02	6	24T - ID: 3.600"
9B	119701-230	Various	2nd - BAXA, MAXA, MDWA	.091/2.3	97-02	5	24T - ID: 3.600"

HONDA

4 SPEED 1995-On

3 SHAFT (116, 120, 132mm Clutch)

STEEL CLUTCHES

ILL	ALTO No.	REF No.	Description	Spec	Year	Qty	Notes
10A	078703	Various	MCLA, MDWA, M6HA, B6VA, MAXA, BAXA	.102/2.6	97-02	3	24T - ID: 3.680"
11A	078705	Various	4th MDWA, M6HA, B6VA, MAXA, BAXA	.091/2.3	97-02	3	24T - ID: 3.680"

OEI® Original Equipment Improvements

ILL	ALTO No.	REF No.	Description	Spec	Year	Qty	Notes
N I	119756	NA	2nd Clutch PowerPack®		97-02	1	

FILTERS

ILL	ALTO No.	REF No.	Description	Spec	Year	Qty	Notes
13D	116940	25420-P0Z-003	Filter - MPZA		95-97	1	
13D	119940	25420-PAX-003	Filter		97-02	1	

METAL CLAD SEALS

ILL	ALTO No.	REF No.	Description	Spec	Year	Qty	Notes
14D	047401	91207-639-015	Converter Housing		92-97	1	
15D	058401A	91206-PG2-005	Left Axle - all except below	56mm	95-97	1	
15D	TBA	91205-PL3-A02	Left Axle - Odyssey / Oasis	54mm	98	1	
16D	058402F	91206-PK4-003	Right Axle - all except below	66mm	97-On	1	
16D	TBA	91207-PH8-005	Right Axle - MPZA	54mm	95-97	1	
N I	047415	91209-551-015	Speedometer		92-97	1	
N I	058401	91201-PA9-004	Throttle Shaft	18mm	92-97	1	
N I	047410	91209-612-003	Manual Lever	22mm	92-97	1	

SEALING RINGS

ILL	ALTO No.	REF No.	Description	Spec	Year	Qty	Notes
KT	058603	NA	Sealing Ring Kit, MPZA - 6M		95-97	1	
KT	119601	NA	Sealing Ring Kit, all others - 3T/2P		97-On	1	
17A	058100	22814-PA9-023	Mainshaft Large - MPZA Metal	32mm	95-97	2	
18A	058104	22814-PK4-003	Mainshaft Small - MPZA Metal	29mm	95-97	1	
19B	058103	22814-PF4-003	Secondary Shaft - MPZA Metal	35mm	95-97	3	
17A	058113A	22814-PAX-005	Mainshaft Large - MDWA, M6HA, B6VA, MAXA, BAXA Teflon	32mm	97-On	1	
18A	058114	22815-P4P-003	Mainshaft Small - MDWA, M6HA, B6VA, MAXA, BAXA Teflon	29mm	97-On	1	
19B	058113B	22816-P6H-003	Secondary Shaft - MDWA, M6HA, B6VA, MAXA, BAXA Peak®	35mm	97-On	2	

ELECTRONIC CONTROL COMPONENTS

ILL	ALTO No.	REF No.	Description	Spec	Year	Qty	Notes
N I	146502A	28200-POZ-003	Solenoid - Shift MPZA		95-97	1	
N I	146503A	28250-P6H-024	Solenoid - Linear, dual MPZA		95-97	1	

HONDA

4 & 5 SPEED 2002-On
3 SHAFT (120 & 123 Clutch)

KITS

*Add Suffix SK for Super Kit

ILL	Description	Years	Friction Module	Steel Module	Overhaul Kit	Banner Kit	Master Kit
KT	Rebuilding Kit - ACURA RSX MRMA with Molded Pistons	02-On	161752	161753	169800A	161901LS	161901
KT	Rebuilding Kit - ACURA RSX MRMA without Molded Pistons	02-On	161752	161753	169800	161901XLS	161901X
KT	Rebuilding Kit - HONDA CR-V MRVA, MCVA with Molded Pistons	02-04	164752	164753	164800A	164901LS	164901
KT	Rebuilding Kit - HONDA CR-V MRVA, MCVA without Molded Pistons	02-04	164752	164753	164800	164901XLS	164901X
KT	Rebuilding Kit - HONDA CR-V MKYA/GPLA, MKZA/GPPA with Molded Pistons	05-On	169752A	169753A	169800	169901ALS	169901A
KT	Rebuilding Kit - HONDA CR-V MKYA/GPLA, MKZA/GPPA without Molded Pistons	05-On	169752A	169753A	169800A	169901AXLS	169901AX
KT	Rebuilding Kit - HONDA ELEMENT BZKA, MZKA with Molded Pistons	03-04	164752	164753	164800	164901LS	164901
KT	Rebuilding Kit - HONDA ELEMENT BZKA, MZKA without Molded Pistons	03-04	164752	164753	164800A	164901XLS	164901X
KT	Rebuilding Kit - HONDA ELEMENT BZKA, MZKA with Molded Pistons	05-On	164752A	164753A	164800	164901ALS	164901A
KT	Rebuilding Kit - HONDA ELEMENT BZKA, MZKA without Molded Pistons	05-On	164752A	164753A	164800A	164901AXLS	164901AX
KT	Rebuilding Kit - HONDA ACCORD BCLA, MCLA with Molded Pistons	03-04	169752	169753	169800A	169901LS	169901
KT	Rebuilding Kit - HONDA ACCORD BCLA, MCLA without Molded Pistons	03-04	169752	169753	169800	169901XLS	169901X
KT	Rebuilding Kit - HONDA ACCORD BCLA, MCLA with Molded Pistons	05-On	169752A	169753A	169800	169901ALS	169901A
KT	Rebuilding Kit - HONDA ACCORD BCLA, MCLA without Molded Pistons	05-On	169752A	169753A	169800A	169901AXLS	169901AX

FRICTION CLUTCHES - MRMA

ILL	ALTO No.	REF No.	Description	Spec	Year	Qty	Notes
N I	078700A	22544-PRP-003	Low / 3rd	.075/1.9	02-On	8	SAS - 44T - OD: 4.732" - PL
N I	078700A	22544-PRP-003	2nd	.075/1.9	02-On	4	SAS - 44T - OD: 4.732" - PL
N I	134700A195	22546-PRP-003	4th / 5th	.077/1.95	02-On	6	SAS - 44T - OD: 4.833" - PL

FRICTION CLUTCHES - MRVA, MCVA, BZKA, MZKA

ILL	ALTO No.	REF No.	Description	Spec	Year	Qty	Notes
N I	078700A	22544-PRP-003	Low	.076/1.93	02-On	5	SAS - 44T - OD: 4.732" - PL
N I	078700A	22545-PPV-003	2nd	.076/1.93	02-On	5	SAS - 44T - OD: 4.732" - PL
N I	134700A195	22546-PPV-A01	3rd / 4th	.077/1.96	02-On	6-8	SAS - 44T - OD: 4.833" - PL

FRICTION CLUTCHES - BCLA, MCLA

ILL	ALTO No.	REF No.	Description	Spec	Year	Qty	Notes
N I	078700A	22544-PRP-003	Low / 3rd	.076/1.93	03-On	10	SAS - 44T - OD: 4.732" - PL
N I	078700A	22545-PRP-013	2nd	.076/1.93	03-On	5	SAS - 44T - OD: 4.732" - PL
N I	134700A195	22546-PPV-A01	4th / 5th	.077/1.96	03-On	6	SAS - 44T - OD: 4.833" - PL

FRICTION CLUTCHES - BCLA, MCLA, MKYA/GPLA, MKZA/GPPA

ILL	ALTO No.	REF No.	Description	Spec	Year	Qty	Notes
N I	078700A	22544-PRP-003	Low / 2nd	.076/1.93	03-On	10	SAS - 44T - OD: 4.732" - PL
N I	169700A200	22545-RCR-003	3rd	.078/1.98	05-On	5	SAS - 42T - OD: 4.670" - SB
N I	134700A195	22546-RFK-003	4th / 5th	.077/1.96	03-On	8	SAS - 44T - OD: 4.833" - PL

HONDA

4 & 5 SPEED 2002-On
3 SHAFT (120 & 123 Clutch)

STEEL CLUTCHES - MRMA

ILL	ALTO No.	REF No.	Description	Spec	Year	Qty	Notes
N I	161701A200	22543-PRP-003	Low / 3rd	.079/2.0	02-On	7	Wave - 20T
N I	161701-200	22543-PRP-901	Low / 3rd	.079/2.0	02-On	1	Flat - 20T
N I	TBA	22643-PRP-003	2nd	.079/2.0	02-On	AR	Wave
N I	078701	22653-P7Z-003	2nd	.079/2.0	02-On	4	Flat 24T - ID: 3.677"
N I	134701A200	22653-PRP-003	4th / 5th	.079/2.0	02-On	6	Wave

STEEL CLUTCHES - MRVA, MCVA, BZKA, MZKA

ILL	ALTO No.	REF No.	Description	Spec	Year	Qty	Notes
N I	078701-160	22543-RCL-901	Low	.063/1.6	02-On	5	24T - ID: 3.677
N I	078701	22643-PRP-003	2nd	.078/2.0	02-On	4-5	24T - ID: 3.677
N I	134705-230	22653-PPV-A01	3rd / 4th - MRVA, MCVA	.091/2.3	02-04	6	20T - ID: 3.696"
N I	078701-400	22643-RCL-801	2nd - BZKA, MZKA	.157/4.0	05-On	1	24T - ID: 3.677
N I	169701A200	22653-PRP-901	3rd / 4th - BZKA, MZKA	.079/2.00	05-On	8	24T Notched - ID: 3.697"

STEEL CLUTCHES - BCLA, MCLA

ILL	ALTO No.	REF No.	Description	Spec	Year	Qty	Notes
N I	TBA	22543-RCL-003	Low / 3rd	.063/1.6	03-On	8	Wave - 24T - ID: 3.677
N I	078701-160	22543-RCL-901	Low / 3rd	.063/1.6	03-On	8/2	24T - ID: 3.677
N I	TBA	22643-RCL-003	2nd	.063/1.6	03-On	3	Wave - 24T - ID: 3.677
N I	078701-400	22643-RCL-801	2nd	.157/4.0	03-On	1	24T - ID: 3.677
N I	078701	22653-P7Z-003	2nd	.063/1.6	03-On	3/1	24T - ID: 3.677
N I	169701-230	22653-RCL-003	4th / 5th	.090/2.3	03-04	6	Wave - 24T

STEEL CLUTCHES - BCLA, MCLA, MKYA/GPLA, MKZA/GPPA

ILL	ALTO No.	REF No.	Description	Spec	Year	Qty	Notes
N I	078701-160	22543-RCL-901	Low / 3rd	.063/1.6	03-On	10	24T - ID: 3.677"
N I	078701	22643-RCL-003	2nd	.078/2.0	03-On	4	24T - ID: 3.677"
N I	078701-400	22643-RCL-801	2nd	.157/4.0	03-On	1	24T - ID: 3.677"
N I	169701A200	22653-PRP-901	4th / 5th	.079/2.00	05-On	8	24T Notched - ID: 3.697"

PRESSURE PLATES

ILL	ALTO No.	REF No.	Description	Spec	Year	Qty	Notes
N I	TBA	22551-PRP-003	3rd		02-On	AR	
N I	TBA	22571-PRP-003	2nd		02-On	1	Stepped
N I	TBA	22581-PRP-003	4th / 5th		02-On	2	

FILTERS

ILL	ALTO No.	REF No.	Description	Spec	Year	Qty	Notes
N I	161940	25420-PRP-003	Filter		02-On	1	

ELECTRONIC CONTROL COMPONENTS

ILL	ALTO No.	REF No.	Description	Spec	Year	Qty	Notes
N I	146501A	28250-P7W-003	Solenoid - Linear, single BCLA, MCLA		03-On	1	
N I	146503A	28250-P6H-024	Solenoid - Linear, dual BCLA, MCLA		03-On	1	

PISTONS

ILL	ALTO No.	REF No.	Description	Spec	Year	Qty	Notes
N I	164670	NA	Piston Kit BZKA, MZKA, MCVA, MRVA		02-On	1	2 pistons
N I	169670	NA	Piston Kit 4 & 5 SP BCLA, MCLA, MRMA, MKYA, MKZA, GPLA, GPPA		02-On	1	3 pistons

HONDA

4 SPEED 1999-On

3 SHAFT (123 & 128 Clutch)

A>

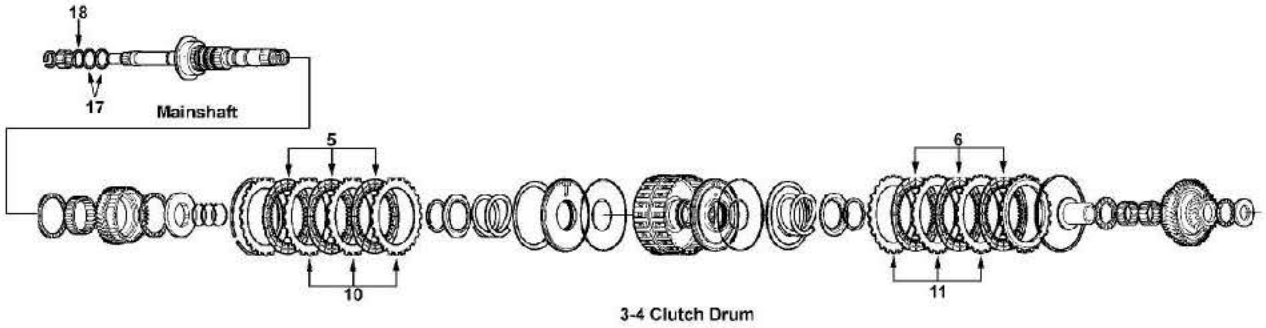

B>

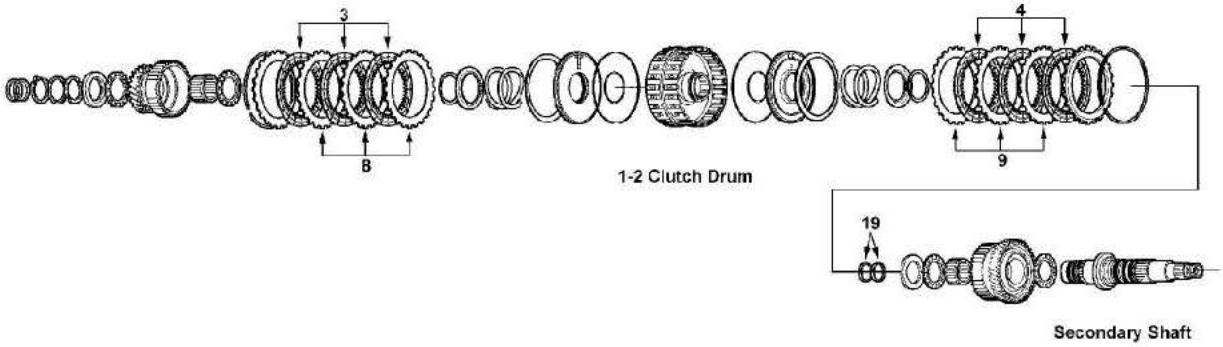

C>

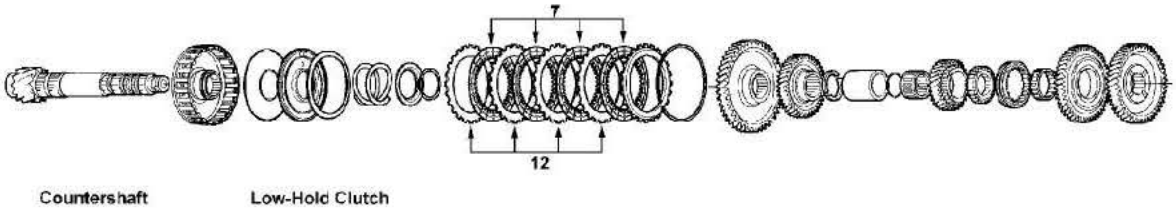

D>

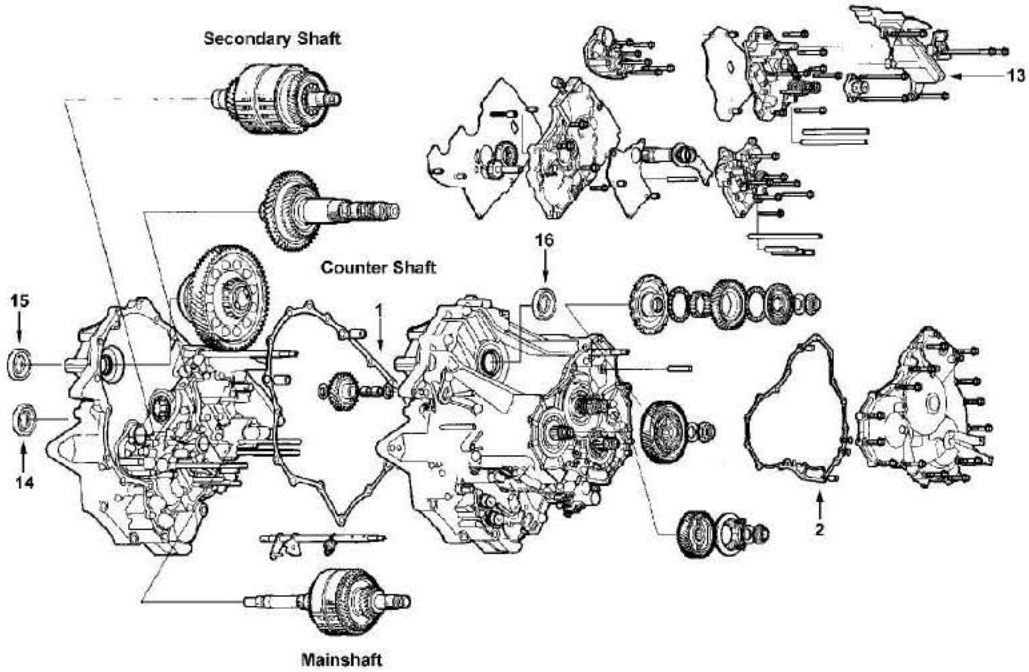

HONDA

4 SPEED 1999-On

3 SHAFT (123 & 128 Clutch)

KITS

*Add Suffix SK for Super Kit

ILL	Description	Years	Friction Module	Steel Module	Overhaul Kit	Banner Kit	Master Kit
KT	Rebuilding Kit - HONDA ODYSSEY B7TA, B7YA	99-On	134752	134753	078804A	134901LS	134901
KT	Rebuilding Kit - ACURA 3.2TL B7VA	99-03	134752	134753	078804A	134901LS	134901
KT	Rebuilding Kit - ISUZU OASIS B7TA, B7YA	99-On	134752	134753	078804A	134901LS	134901

MISCELLANEOUS GASKETS & KIT COMPONENTS

ILL	ALTO No.	REF No.	Description	Spec	Year	Qty	Notes
1D	TBA	21811-P7T-000	Gasket, Case		99-On	1	
2D	TBA	21812-P7T-000	Gasket, Side		99-On	1	
N I	A50005	28200-P0Z-003	Gasket, Shift Solenoid Assembly- B7XA, MPZA, B7TA, B7YA		99-On	1	

FRICTION CLUTCHES

ILL	ALTO No.	REF No.	Description	Spec	Year	Qty	Notes
3B	134700A195	22545-P7T-003	1st (low)	.077/1.95	99-On	6	SAS - 44T - OD: 4.833" - PL
4B	134700A195	22545-P7T-003	2nd	.077/1.95	99-On	6	SAS - 44T - OD: 4.833" - PL
5A	134702A195	22644-P7T-003	3rd	.077/1.95	99-On	4	SAS - 44T - OD: 5.040" - PL
6A	134702A195	22644-P7T-003	4th	.077/1.95	99-On	4	SAS - 44T - OD: 5.040" - PL

STEEL CLUTCHES

ILL	ALTO No.	REF No.	Description	Spec	Year	Qty	Notes
8B	134701-200	22543-P7T-003	1st (low) - wide tooth	.078/2.0	99-On	6	20T - ID: 3.675"
9B	134701-200	22543-P7T-003	2nd - wide tooth	.078/2.0	99-On	6	20T - ID: 3.675"
9B	134701-220	NA	2nd - wide tooth- selective	.087/2.2	99-On	AR	20T - ID: 3.675"
9B	134701-260	NA	2nd - wide tooth- selective	.102/2.6	99-On	AR	20T - ID: 3.675"
10A	134703-230	22656-P7T-003	3rd - narrow tooth	.091/2.3	99-On	4	20T - ID: 3.675"
11A	134703-200	22653-P7T-003	4th - narrow tooth	.078/2.0	99-On	4	20T - ID: 3.675"

FILTERS

ILL	ALTO No.	REF No.	Description	Spec	Year	Qty	Notes
13D	134940	25420-P7X-003	Filter		99-On	1	

METAL CLAD SEALS

ILL	ALTO No.	REF No.	Description	Spec	Year	Qty	Notes
14D	134400	91206-P0Z-005	Converter Housing	54mm	99-On	1	
15D	134425	91205-P0X-005	Left Axle	56mm	99-On	1	
16D	134426	91207-P7Z-003	Right Axle	68mm	99-On	1	
N I	047415	91209-551-015	Speedometer		99-On	1	
N I	058401	91201-PA9-004	Throttle Shaft	18mm	99-On	1	
N I	047410	91209-612-003	Manual Lever	22mm	99-On	1	

SEALING RINGS

ILL	ALTO No.	REF No.	Description	Spec	Year	Qty	Notes
KT	119601	NA	Sealing Ring Kit - 3T/2P		99-On	1	
17A	058113A	22814-P0X-003	Mainshaft Large - Teflon	32mm	99-On	2	
18A	058114	22815-P4P-003	Mainshaft Small - Teflon	29mm	99-On	1	
19B	058113B	22816-P6H-003	Secondary Shaft - Peak®	35mm	99-On	2	

HONDA

4 SPEED 1999-On

3 SHAFT (123 & 128 Clutch)

ELECTRONIC CONTROL COMPONENTS

ILL	ALTO No.	REF No.	Description	Spec	Year	Qty	Notes
N I	146502A	28200-POZ-003	Solenoid - Shift B7TA, B7VA, B7YA		99-On	1	
N I	146503A	28250-P6H-024	Solenoid - Linear, dual B7TA, B7VA, B7YA		99-On	1	

HONDA

ACCORD HYBRID 2005-07 5 SPEED
ACURA MDX 2003-08, RL 2005-09

KITS

*Add Suffix SK for Super Kit

ILL	Description	Years	Friction Module	Steel Module	Overhaul Kit	Banner Kit	Master Kit
KT	Rebuilding Kit - MDX AWD MDKA, BDKA	03-06	172752	172753	172800	172901LS	172901
KT	Rebuilding Kit - MDX AWD BYFA	07-08	172752C	172753C	172806	172901ALS	172901A
KT	Rebuilding Kit - RL 2WD MJBA	05-09	172752A	172753A	172802	172903LS	172903
KT	Rebuilding Kit - ACCORD HYBRID MURA	05-07	172752A	172753D	172804	172905LS	172905

FRICTION CLUTCHES

ILL	ALTO No.	REF No.	Description	Spec	Year	Qty	Notes
N I	078700A	22544-PX4-701	Low Hold MDKA, BDKA, BYFA	.075/1.9	03-On	3	SAS - 44T - OD: 4.732" - PL
N I	169700A200	22545-RCR-003	Low Hold MJBA, MURA	.079/2.0	05-On	3	SAS - 42T - OD: 4.670" - SB
N I	116702A	22544-P7W-003	Low	.075/1.9	03-On	5	SAS - 49T - OD: 5.190" - PL
		22546-RYF-003					
N I	172704A190	22545-RDK-013	2nd	.076/1.9	03-On	7	SAS - 28T - OD: 4.694" - SB
N I	172706A190	22544-RDK-003	3rd	.076/1.9	03-On	5	SAS - 42T - OD: 5.300" - PL
N I	116704A193	22644-RYF-013	3rd BYFA	.076/1.9	07-08	6	SAS - 42T - OD: 5.035" - SB
N I	172708A190	22645-RDK-003	4th / 5th MDKA, BDKA	.076/1.9	03-On	8	SAS - 44T - OD: 5.120" - PL
N I	172708A195	22646-RJB-003	4th / 5th MJBA, MURA	.077/1.96	05-On	8	SAS - 44T - OD: 5.232" - PL
N I	116708A193	22645-RYF-003	4th / 5th BYFA	.075/1.90	07-08	10	SAS - 42T - OD: 5.225" - SB

STEEL CLUTCHES

ILL	ALTO No.	REF No.	Description	Spec	Year	Qty	Notes
N I	146703-180	22673-P7W-003	Low Hold	.071/1.8	03-On	3	6T - ID: 3.677"
N I	146701-160	22543-P7W-003	Low	.062/1.6	03-On	5	24T - ID: 4.070"
N I	146701-200	NA	Low-selective	.078/2.0	03-On	AR	24T - ID: 4.070"
N I	172705-180	22643-RDK-013	2nd	.071/1.8	03-On	7	24T - ID: 3.3900
N I	172707-200	22653-RDK-003	3rd	.079/2.0	03-On	5	20T - ID: 3.464"
N I	172707A178	22653-RYF-003	3rd BYFA	.070/1.78	07-08	3-6	FLAT - 24T - ID: 3.570"
N I	TBA	22655-RYF-003	3rd BYFA wave	.070/1.78	07-08	3	WAVE - 20T - ID: 3.464"
N I	172709-200	22656-RDK-003	4th / 5th MDKA, BDKA, MURA	.079/2.0	03-On	8	24T - ID: 3.680
N I	172709C200	22656-RDK-003	4th / 5th MDKA, BDKA, MURA	.080/2.03	03-On	8	24T - ID: 3.676
N I	172709B180	22656-RJB-013	4th MJBA	.070/1.78	05-09	5	24T - ID: 3.675
N I	172709B160	22657-RJB-013	5th MJBA	.063/1.60	05-09	5	24T - ID: 3.675
N I	172709A160	22657-RYF-003	4th / 5th BYFA	.063/1.6	07-08	6-10	FLAT - 24T - ID: 3.670
N I	TBA	22659-RYF-003	4th / 5th BYFA wave	.063/1.6	07-08	4	WAVE - 24T - ID: 3.670

TORQUE CONVERTER-FRICTION RINGS AND CLUTCHES

ILL	ALTO No.	REF No.	Description	Spec	Year	Qty	Notes
N I	172714	HO-CP-2	Torque Converter Steel - MT4A	.076	03-On	2	40T - ID: 8.183"
N I	172715	HO-CP-2	Torque Converter Steel - MT4A	.047	03-On	1	36T - ID: 7.173"

FILTERS

ILL	ALTO No.	REF No.	Description	Spec	Year	Qty	Notes
N I	172940	25420-RDK-013	Filter - MDKA, BDKA		03-On	1	
N I	118940	25420-P4V-000	Filter - BDKA, BYFA, MDKA, MJBA		03-On	1	Cartridge

HONDA

ACURA NSX 4 Speed

1991-On

A>

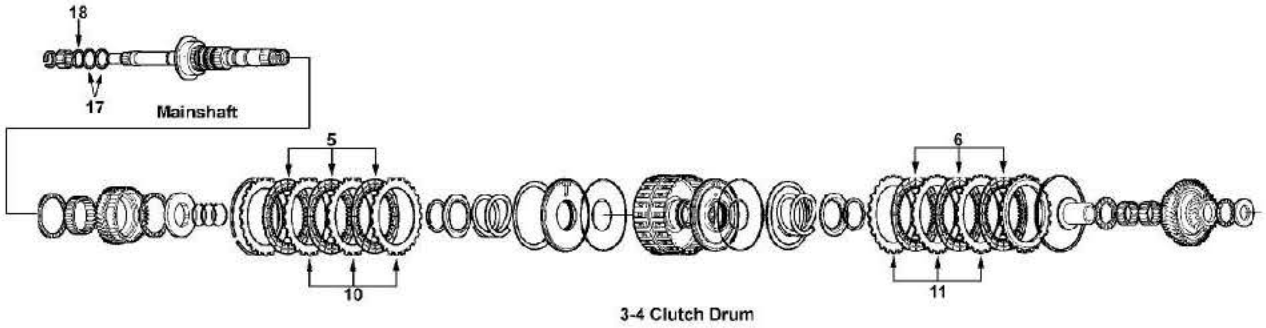

B>

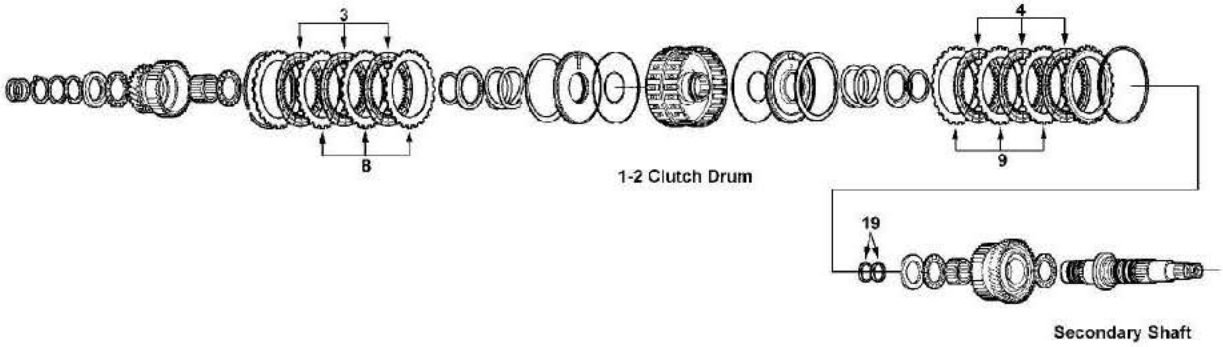

C>

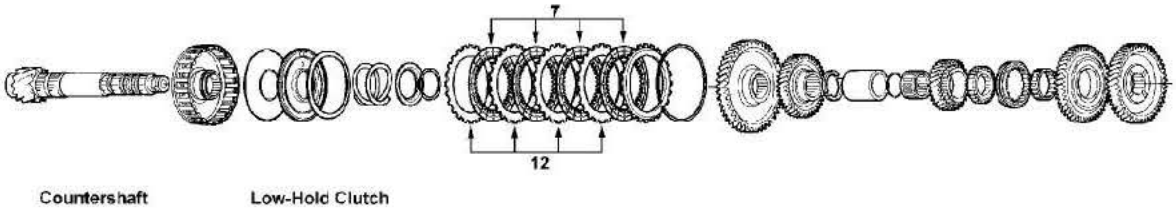

D>

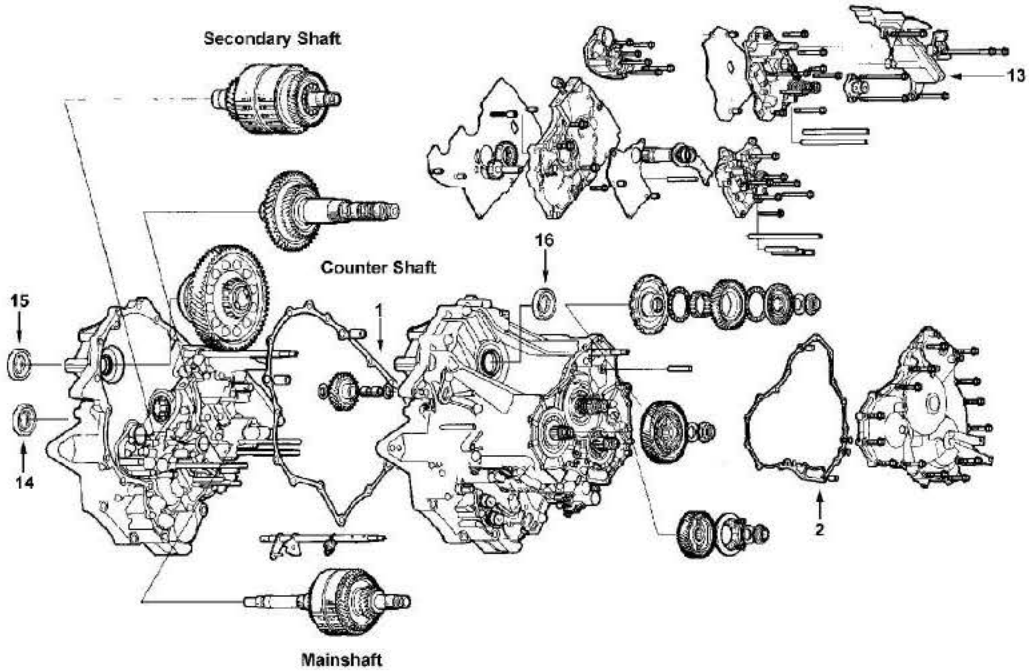

HONDA

ACURA NSX 4 Speed

1991-On

KITS

*Add Suffix SK for Super Kit

ILL	Description	Years	Friction Module	Steel Module	Overhaul Kit	Banner Kit	Master Kit
KT	Rebuilding Kit - with Differential clutches MR9A	91-On	078752C	078753C	078802	078905LS	078905
KT	Rebuilding Kit - without Differential clutches MR9A	91-On	078752B	078753B	078802	078903LS	078903

MISCELLANEOUS GASKETS & KIT COMPONENTS

ILL	ALTO No.	REF No.	Description	Spec	Year	Qty	Notes
1G	TBA	21811-PR9-000	Gasket, Case - all		91-On	1	
2G	TBA	21812-PR9-000	Gasket, Side - all		91-On	1	

FRICTION CLUTCHES

ILL	ALTO No.	REF No.	Description	Spec	Year	Qty	Notes
3B	058720G	Various	1st (low)	.075/1.9	91-On	5	HEG - 41T - OD: 4.558" - PL
4B	078700A	Various	2nd	.075/1.9	91-On	5	SAS - 44T - OD: 4.732" - PL
5A	078700A	Various	3rd	.075/1.9	91-On	5	SAS - 44T - OD: 4.732" - PL
6A	078700-230	Various	4th	.091/2.3	91-On	5	HEG - 44T - OD: 4.720" - PL
7C	078700A	Various	Low-Hold	.075/1.9	91-On	3	SAS - 44T - OD: 4.732" - PL
N I	078718	41252-PR8-000	Differential	.067/1.7	91-On	7	HEG - 17T - OD: 3.933" - PL

STEEL CLUTCHES

ILL	ALTO No.	REF No.	Description	Spec	Year	Qty	Notes
8B	058723-200	22643-PR0-003	1st (low)	.079/2.0	91-On	5	24T - ID: 3.440"
9B	078705	Various	2nd	.091/2.3	91-On	5	24T - ID: 3.677"
10A	078705	Various	3rd	.091/2.3	91-On	5	24T - ID: 3.677"
11A	078705	Various	4th	.091/2.3	91-On	5	24T - ID: 3.677"
12C	078701-210	22543-PX4-003	Low-Hold	.083/2.1	91-On	3	24T - ID: 3.677"
N I	078719	41251-PR8-000	Differential	.100/2.55	91-On	6	26T - ID: 2.825"

OEI® Original Equipment Improvements

ILL	ALTO No.	REF No.	Description	Spec	Year	Qty	Notes
N I	058767-116	NA	DrumSaver® replaces belleville spring		91-On	1	used with 116mm clutch
N I	078767	NA	DrumSaver® replaces belleville spring		91-On	1	used with 120mm clutch

FILTERS

ILL	ALTO No.	REF No.	Description	Spec	Year	Qty	Notes
13D	078944	25420-PR9-010	Filter		91-On	1	

METAL CLAD SEALS

ILL	ALTO No.	REF No.	Description	Spec	Year	Qty	Notes
14D	101400	91207-PR9-003	Converter Housing	68mm	91-On	1	
15D	TBA	91207-PR8-005	Left Axle	63mm	91-On	1	
16D	TBA	91206-PR8-003	Right Axle	70mm	91-On	1	
N I	047415	91209-551-015	Speedometer		91-On	1	
N I	058401	91201-PA9-004	Throttle Shaft	18mm	91-On	1	
N I	047410	91209-612-003	Manual Lever	22mm	91-On	1	

SEALING RINGS

ILL	ALTO No.	REF No.	Description	Spec	Year	Qty	Notes
KT	078601	NA	Sealing Ring Kit - 5M		91-On	1	
17A	101100	22814-PR9-003	Mainshaft	37mm	91-On	3	
19B	058103	22814-PF4-003	Secondary shaft	35mm	91-On	2	

HONDA

ACURA TSX 5 SPEED 2004-On
HONDA CR-V 5 SPEED 2007

KITS

*Add Suffix SK for Super Kit

ILL	Description	Years	Friction Module	Steel Module	Overhaul Kit	Banner Kit	Master Kit
KT	Rebuilding Kit - MCTA	2004	177752B	177753B	177800	177901ALS	177901A
KT	Rebuilding Kit - MCTA	2005	177752	177753	177800	177901LS	177901
KT	Rebuilding Kit - MCTA	06-08	177752C	177753C	177800	177901BLS	177901B
KT	Rebuilding Kit - MM7A, MZHA	07-On	177752A	177753A	177802	177905LS	177905

FRICTION CLUTCHES

ILL	ALTO No.	REF No.	Description	Spec	Year	Qty	Notes
N I	078700A	22544-RCT-004	3rd / Low MCTA	.075/1.9	04-08	10	SAS - 44T - OD: 4.720" - PL
N I	078702-193	22544-R91-003	3rd / Low MM7A, MZHA	.076/1.93	07-On	11	HEG - 44T - OD: 4.758" - SB
N I	078700A	22545-PRP-013	2nd MCTA	.075/1.9	04-08	5	SAS - 44T - OD: 4.720" - PL
N I	078702-193	22544-R91-003	2nd MM7A, MZHA	.076/1.93	07-On	6	HEG - 44T - OD: 4.758" - SB
N I	078700A	22544-PRP-003	4th / 5th MCTA	.075/1.9	04-08	8	SAS - 44T - OD: 4.720" - PL
N I	078704-193	22546-R91-003	4th / 5th MM7A, MZHA	.076/1.93	07-On	8	HEG - 44T - OD: 4.875" - SB
N I	134700A195	22545-P7T-003	1st / 2nd B7YA, B7VA	.076/1.93	03-On	8	HEG - 44T - OD: 4.833" - SAS
N I	169700A200	22544-PRP-003	3rd / Low MKZA, MKYA, GPPA, MCLA	.076/1.93	03-On	8	HEG - 44T - OD: 4.670" - SAS

STEEL CLUTCHES

ILL	ALTO No.	REF No.	Description	Spec	Year	Qty	Notes
N I	177701-160	22543-RCT-004	3rd / Low MCTA	.063/1.6	04-08	10	Flat - 30T - ID: 3.698"
N I	078701C160	22543-RZH-A11	3rd / Low MM7A, MZHA	.063/1.6	07-On	11	Flat - 24T - ID: 3.675"
N I	TBA	22543-RZH-A01	3rd MM7A, MZHA wave	.063/1.6	07-On	5	Wave - 24T - ID: 3.675"
N I	TBA	22543-RZH-003	Low MM7A, MZHA wave	.063/1.6	07-On	4	Wave - 24T - ID: 3.675"
N I	078701	22643-RCL-003	2nd MCTA	.079/2.0	04-08	4	Flat - 24T - ID: 3.677"
N I	078701-400	22643-RCL-801	2nd MCTA	.157/4.0	04-08	1	Flat - 24T - ID: 3.677"
N I	078701C200	22643-RZH-A11	2nd MM7A, MZHA	.079/2.01	07-On	6	Flat - 24T - ID: 3.675"
N I	TBA	22643-RZH-003	2nd MM7A, MZHA - wave	.079/2.01	07-On	5	Wave - 24T - ID: 3.675"
N I	078701	22643-RCL-003	4th / 5th MCTA	.079/2.0	04-08	8	Flat - 24T - ID: 3.677"
N I	169701A200	22653-R91-003	4th / 5th MM7A, MZHA	.079/2.0	04-08	8	24T Notched - ID: 3.697"

FILTERS

ILL	ALTO No.	REF No.	Description	Spec	Year	Qty	Notes
N I	161940	25420-PRP-003	Filter		04-On	1	

HONDA
5 SPEED
2000-On

KITS

*Add Suffix SK for Super Kit

ILL	Description	Years	Friction Module	Steel Module	Overhaul Kit	Banner Kit	Master Kit
KT	Rebuilding Kit - ACURA 3.2TL M7WA	2000	146752	146753	146800	146901LS	146901
KT	Rebuilding Kit - ACURA 3.2TL B7WA	01-03	146752	146753	146800	146901LS	146901
KT	Rebuilding Kit - ACURA 3.2TL BDGA	04-On	157752	157753	146800	146903LS	146903
KT	Rebuilding Kit - ACURA 3.2CL BGFA, MGFA	01-On	146752	146753	146800	146901LS	146901
KT	Rebuilding Kit - ACURA MDX BGHA, MGHA	01-02	157752	157753	157800	157901LS	157901
KT	Rebuilding Kit - HONDA ACCORD V6 BAYA, MAYA	03-04	146752	146753	146800	146901LS	146901
KT	Rebuilding Kit - HONDA ACCORD V6 BAYA, MAYA	05-07	157752	157753	146800	146903LS	146903
KT	Rebuilding Kit - HONDA ODYSSEY BYBA	02-04	157752	157753	157800	157901LS	157901
KT	Rebuilding Kit - HONDA PILOT BVGA	03-06	157752	157753	157800	157901LS	157901
KT	Rebuilding Kit - HONDA ODYSSEY BGRA, PGRA	05-07	157752A	157753A	157800	157903LS	157903
KT	Rebuilding Kit - HONDA B36A, P36A, B97A	07-On	116752A	116753A	116802	116903LS	116903

MISCELLANEOUS GASKETS & KIT COMPONENTS

ILL	ALTO No.	REF No.	Description	Spec	Year	Qty	Notes
N I	TBA	21811-P7W-000	Gasket, Case - except MGHA, BGHA, BYBA		00-On	1	
N I	TBA	21811-PGH-000	Gasket, Case - MGHA, BGHA, BYBA only		01-On	1	
N I	TBA	21812-P7W-000	Gasket, Side - all		00-On	1	
N I	A50006	28250-P7W-003	Gasket, Single Linear Solenoid- BGRA, PGRA,B36A,P36A,BYBA,BVGA,PVGA,BVLA		00-On	1	

FRICTION CLUTCHES- B7WA, BAYA, BGFA, M7WA, MAYA, MGFA

ILL	ALTO No.	REF No.	Description	Spec	Year	Qty	Notes
N I	116702A	Various	1st (low)	.075/1.9	00-On	5	SAS - 49T - OD: 5.190" - PL
N I	146704A195	Various	2nd	.077/1.95	00-On	6	SAS - 30T - OD: 5.020" - PL
N I	146706A195	Various	3rd	.077/1.95	00-On	5	SAS - 42T - OD: 4.727" - PL
N I	134702A195	Various	4th	.077/1.95	00-On	4-5	SAS - 44T - OD: 5.040" - PL
N I	134702A195	Various	5th	.077/1.95	00-On	4-5	SAS - 44T - OD: 5.040" - PL
N I	078700A	Various	Low-Hold	.075/1.9	00-On	3	SAS - 44T - OD: 4.732" - PL

FRICTION CLUTCHES- BAYA, BDGA, BGHA, BGRA, BVGA, BYBA, MAYA, MGHA, PGRA

ILL	ALTO No.	REF No.	Description	Spec	Year	Qty	Notes
N I	116702A	Various	1st (low)	.075/1.9	00-On	5	SAS - 49T - OD: 5.190" - PL
N I	146704A195	Various	2nd	.077/1.95	00-On	6	SAS - 30T - OD: 5.020" - PL
N I	157706A195	22644-PGH-003	3rd	.077/1.95	01-On	5	SAS - 42T - OD: 4.890" - PL
N I	134702A195	Various	4th	.077/1.95	00-On	4-5	SAS - 44T - OD: 5.040" - PL
N I	134702A195	Various	5th	.077/1.95	00-On	4-5	SAS - 44T - OD: 5.040" - PL
N I	078700A	Various	Low-Hold	.075/1.9	00-On	3	SAS - 44T - OD: 4.732" - PL

FRICTION CLUTCHES- B36A, B97A, P36A

ILL	ALTO No.	REF No.	Description	Spec	Year	Qty	Notes
N I	116702A	Various	1st (low)	.075/1.9	00-On	5	SAS - 49T - OD: 5.190" - PL
N I	172704A190	Various	2nd	.077/1.95	07-On	7	SAS - 28T - OD: 4.694" - SB
N I	116704A193	22644-RJB-E01	3rd	.076/1.93	07-On	5	SAS - 42T - OD: 5.030" -SB
N I	116706A196	Various	4th	.077/1.95	07-On	5	SAS - 45T - OD: 5.220" -SB
N I	116708A193	22645-RWE-003	5th	.076/1.93	07-On	5	SAS - 42T - OD: 5.220" -SB
N I	078700A	Various	Low-Hold	.075/1.9	00-On	3	SAS - 44T - OD: 4.732" - PL

STEEL CLUTCHES- B7WA, BAYA, BGFA, M7WA, MAYA, MGFA

ILL	ALTO No.	REF No.	Description	Spec	Year	Qty	Notes
N I	146701-160	Various	1st (low)	.063/1.6	00-On	5	24T - ID: 4.070"
N I	146701-200	Various	1st (low)-selective	.079/2.0	00-On	5	24T - ID: 4.070"

HONDA
5 SPEED
2000-On

STEEL CLUTCHES- B7WA, BAYA, BGFA, M7WA, MAYA, MGFA

ILL	ALTO No.	REF No.	Description	Spec	Year	Qty	Notes
N I	146705-160	Various	2nd	.063/1.6	00-On	6	20T - ID: 3.751"
N I	146707-230	Various	3rd	.091/2.3	00-On	5	24T - ID: 3.463"
N I	134703-200	Various	4th	.078/2.0	00-On	4	20T - ID: 3.677"
N I	134703-230	Various	5th	.091/2.3	00-On	4	20T - ID: 3.677"
N I	146703-180	Various	Low-Hold	.071/1.8	00-On	3	6T- ID: 3.677"

STEEL CLUTCHES- BAYA, BDGA, BGHA, BGRA, BVGA, BYBA, MAYA, MGHA, PGRA

ILL	ALTO No.	REF No.	Description	Spec	Year	Qty	Notes
N I	146701-160	Various	1st (low)	.063/1.6	00-On	5	24T - ID: 4.070"
N I	146705-160	Various	2nd	.063/1.6	00-On	6	20T - ID: 3.751"
N I	157707-230	22653-PGH-003	3rd	.091/2.3	01-On	5	20T - ID: 3.463"
N I	157707-250	NA	3rd - selective	.098/2.5	01-On	AR	20T - ID: 3.463"
N I	134703-200	Various	4th	.078/2.0	00-On	4	20T - ID: 3.677"
N I	134703-160	Various	4th- BGRA, PGRA only	.063/1.60	06-On	5	20T - ID: 3.675"
N I	134703-230	Various	5th	.091/2.3	00-On	4	20T - ID: 3.677"
N I	134703-160	Various	5th- BGRA, PGRA only	.063/1.60	06-On	5	20T - ID: 3.675"
N I	146703-180	Various	Low-Hold	.071/1.8	00-On	3	6T- ID: 3.677"

STEEL CLUTCHES- B36A, B97A, P36A

ILL	ALTO No.	REF No.	Description	Spec	Year	Qty	Notes
N I	146701-160	Various	1st (low)	.063/1.6	00-On	5	24T - ID: 4.070"
N I	172705-180	Various	2nd	.071/1.8	07-On	7	24T - ID: 3.396"
N I	116705-198	22653-RJB-E01	3rd	.078/1.98	07-On	5	20T - ID: 3.570"
N I	116707-160	22657-RJB-E01	4th	.063/1.60	07-On	5	24T - ID: 3.740"
N I	172709B160	22657-RJB-013	5th	.063/1.60	07-On	5	24T - ID: 3.670"
N I	146703-180	Various	Low-Hold	.071/1.8	00-On	3	6T- ID: 3.677"

FILTERS

ILL	ALTO No.	REF No.	Description	Spec	Year	Qty	Notes
N I	157940	25420-PGH-003	Filter - MGHA Acura MDX		01-02	1	Deep internal
N I	157940	25420-PGH-003	Filter - BVGA Honda Pilot 3.5L		03-05	1	Deep internal
N I	157940A	25420-P7W-003	Filter - B7WA, BAYA, BGHA, BYBA, M7WA, MGFA		00-On	1	Shallow internal
N I	146940	25450-P7W-003	Filter - B7WA, BGHA, BYBA, M7WA, MGFA, MGHA		00-On	1	Spin On
N I	146940A	25450-RAY-003	Filter - BAYA, BDGA, BGRA, MAYA, PGRA		03-On	1	Cartridge
N I	161940	25420-PRP-003	Filter		01-On	1	

METAL CLAD SEALS

ILL	ALTO No.	REF No.	Description	Spec	Year	Qty	Notes
N I	134400	91206-P0Z-005	Converter Housing	54mm	00-On	1	
N I	134425	91205-P0X-005	Left Axle	56mm	00-On	1	
N I	134426	91207-P7Z-003	Right Axle	68mm	00-On	1	
N I	047415	91209-551-015	Speedometer		00-On	1	
N I	058401	91201-PA9-004	Throttle Shaft	18mm	00-On	1	
N I	047410	91209-612-003	Manual Lever	22mm	00-On	1	

SEALING RINGS

ILL	ALTO No.	REF No.	Description	Spec	Year	Qty	Notes
KT	119601	NA	Sealing Ring Kit - 3T/2P		00-On	1	
17A	058113A	22814-P0X-003	Mainshaft Large - Teflon	32mm	00-On	2	
18A	058114	22815-P4P-003	Mainshaft Small - Teflon	29mm	00-On	1	

HONDA
5 SPEED
2000-On

SEALING RINGS

19B	058113B	22816-P6H-003	Secondard Shaft - Peakr	35mm	00-On	2	

ELECTRONIC CONTROL COMPONENTS

ILL	ALTO No.	REF No.	Description	Spec	Year	Qty	Notes
N I	146501A	28250-P7W-003	Solenoid - Linear, single B7WA, BAYA, BGFA, BGHA, BYBA, M7WA, MAYA		00-On	1	
N I	146503A	28250-P6H-024	Solenoid - Linear, dual B7WA, BAYA, BGFA, BGHA, BYBA, M7WA, MAYA		00-On	1	

HONDA
5 SPEED 3 SHAFT
2006-On

KITS

*Add Suffix SK for Super Kit

ILL	Description	Years	Friction Module	Steel Module	Overhaul Kit	Banner Kit	Master Kit
KT	Rebuilding Kit - HONDA CIVIC SMMA Fit	07-On	058752Q	058753R	058808A	058907LS	058907A
KT	Rebuilding Kit - HONDA CIVIC SPCA Jazz	06-On	058752Q	058753Q	058808A	058907LS	058907

FRICTION CLUTCHES

ILL	ALTO No.	REF No.	Description	Spec	Year	Qty	Notes
N I	058700A	22544-RPC-003	Low SPCA/SMMA	.075/1.9	06-On	6	SAS - 38T - OD: 4.160" - SB
N I	058704A195	22544-RPC-004	2nd/4th SPCA/SMMA	.077/1.95	06-On	7-8	SAS - 40T - OD: 4.700" - SB
N I	058706A195	22545-RPC-003	3rd/5th SPCA/SMMA	.076/1.93	06-On	6-8	SAS - 40T - OD: 4.730" - SB

STEEL CLUTCHES

ILL	ALTO No.	REF No.	Description	Spec	Year	Qty	Notes
N I	058703-160	22543-RPC-003	Low SPCA/SMMA	.063/1.6	06-On	6	32T - ID: 3.235"
N I	058705-200	22643-RPC-004	2nd/4th SPCA	.078/1.98	06-On	4	30T - ID: 3.390"
N I	058705-160	22653-RPC-003	2nd/4th SPCA/SMMA	.063/1.6	06-On	4	30T - ID: 3.390"
N I	058705-230	22643-RMM-004	2nd/4th SMMA	.090/2.3	07-On	3	30T - ID: 3.390"
N I	058707-160	22643-RPC-003	3rd/5th SPCA	.063/1.6	06-On	6-8	24T - ID: 3.380"
N I	058707-200	22643-RMM-003	3rd/5th SMMA	.079/2.01	07-On	6	24T - ID: 3.380"

FILTERS

ILL	ALTO No.	REF No.	Description	Spec	Year	Qty	Notes
N I	058946A	25420-RPC-003	Filter SPCA/SMMA		06-On	1	

HONDA CODES

CODE	DESCRIPTION
A24A	4 Speed - 3 Shaft with 110mm Clutches
A2YA	4 Speed - 3 Shaft with 110mm Clutches
A4RA	4 Speed - 2 Shaft with 110mm Clutches
A6VA	4 Speed - 3 Shaft with 120mm Clutches
AK	4 Speed - 2 Shaft with 106mm Clutches
AOYA	4 Speed - 3 Shaft with 120mm Clutches
APX4	4 Speed - 3 Shaft with 120mm Clutches
APXA	4 Speed - 3 Shaft with 120mm Clutches
AS	4 Speed - 2 Shaft with 110mm Clutches
B36A	5 Speed
B46A	4 Speed - 2 Shaft with 110mm Clutches
B4RA	4 Speed - 2 Shaft with 110mm Clutches
B6VA	4 Speed - 3 Shaft with 116mm & 132mm
B7TA	4 Speed - 3 Shaft with 123mm & 128mm
B7VA	4 Speed - 3 Shaft with 123mm & 128mm
B7WA	5 Speed
B7XA	4 Speed - 3 Shaft with 120mm Clutches
B7YA	4 Speed - 3 Shaft with 123mm & 128mm
B90A	5 Speed
B97A	5 Speed
BAXA	4 Speed - 3 Shaft with 116mm & 132mm
BAYA	5 Speed
BCLA	4 Speed - 3 Shaft with 120mm & 123mm
BDGA	5 Speed
BDHA	TBA
BDKA	5 Speed - MDX
BDRA	4 Speed - 2 Shaft with 110mm Clutches
BGFA	5 Speed
BGHA	5 Speed
BGRA	5 Speed
BJFA	TBA
BLVA	TBA
BMXA	4 Speed - 2 Shaft with 110mm Clutches
BOYA	4 Speed - 3 Shaft with 120mm Clutches
BVGA	5 Speed
BWEA	TBA
BYBA	5 Speed
BYFA	5 Speed - MDX
BZHA	TBA
BZJA	TBA

CODE	DESCRIPTION
BZKA	4 Speed - 3 Shaft with 120mm & 123mm
BZKA	4 Speed - 3 Shaft with 120mm & 123mm
BZNA	TBA
CA	4 Speed - 2 Shaft with 110mm Clutches
F4	4 Speed - 2 Shaft with 116mm Clutches
G4	4 Speed - 2 Shaft with 116mm Clutches
GPLA	4 Speed - 3 Shaft with 120mm & 123mm
GPPA	4 Speed - 3 Shaft with 120mm & 123mm
K4	4 Speed - 2 Shaft with 116mm Clutches
L4	4 Speed - 2 Shaft with 110mm Clutches
L5	4 Speed - 2 Shaft with 116mm Clutches
M1WA	4 Speed - 2 Shaft with 116mm Clutches
M24A	4 Speed - 3 Shaft with 110mm Clutches
M48A	4 Speed - 2 Shaft with 110mm Clutches
M4RA	4 Speed - 2 Shaft with 110mm Clutches
M4TA	4 Speed - 3 Shaft with 116mm Clutches
M4VA	CVT
M5DA	4 Speed - 2 Shaft with 125mm Clutches
M5HA	4 Speed - 2 Shaft with 125mm Clutches
M6HA	4 Speed - 3 Shaft with 116mm & 132mm
M6VA	4 Speed - 3 Shaft with 116mm & 132mm
M7WA	5 Speed
M7ZA	4 Speed - 3 Shaft with 120mm Clutches
M91A	5 Speed
MAXA	4 Speed - 3 Shaft with 116mm & 132mm
MAYA	5 Speed
MCLA	4 Speed - 3 Shaft with 120mm & 123mm
MCTA	5 Speed - RSX
MCVA	4 Speed - 3 Shaft with 120mm & 123mm
MDKA	5 Speed - MDX
MDLA	4 Speed - 3 Shaft with 116mm Clutches
MDMA	4 Speed - 3 Shaft with 116mm Clutches
MDPA	5 Speed - Saturn Vue 4WD
MDRA	5 Speed - Saturn Vue 2WD
MDWA	4 Speed - 3 Shaft with 116mm & 132mm
MDWA	4 Speed - 3 Shaft with 116mm & 132mm
MGFA	5 Speed
MGHA	5 Speed
MHTA	CVT
MJBA	5 Speed - MDX

HONDA CODES

CODE	DESCRIPTION
MJFA	TBA
MKYA	4 Speed - 3 Shaft with 120mm & 123mm
MKZA	4 Speed - 3 Shaft with 120mm & 123mm
ML4A	4 Speed - 2 Shaft with 110mm Clutches
MLYA	CVT
MM7A	TBA
MNZA	TBA
MOYA	4 Speed - 3 Shaft with 116mm & 132mm
MP1A	4 Speed - 3 Shaft with 120mm Clutches
MP6A	TBA
MP7A	4 Speed - 3 Shaft with 116mm Clutches
MPCA	TBA
MPJA	4 Speed - 3 Shaft with 120mm Clutches
MPOA	4 Speed - 3 Shaft with 120mm Clutches
MPPA	4 Speed - 2 Shaft with 110mm Clutches
MPRA	4 Speed - 3 Shaft with 116mm Clutches
MPSA	TBA
MPWA	4 Speed - 2 Shaft with 116mm Clutches
MPWA	4 Speed - 2 Shaft with 116mm Clutches
MPXA	4 Speed - 3 Shaft with 120mm Clutches
MPYA	4 Speed - 2 Shaft with 125mm Clutches
MPZA	4 Speed - 3 Shaft with 116mm & 132mm
MR9A	4 Speed NSX
MRMA	5 Speed - RSX
MRVA	4 Speed - 3 Shaft with 120mm & 123mm
MURA	5 Speed - MDX
MY8A	4 Speed - 2 Shaft with 116mm Clutches
MYB8	4 Speed - 2 Shaft with 116mm Clutches
MZHA	TBA
MZJA	TBA
MZKA	4 Speed - 3 Shaft with 120mm & 123mm
P1	4 Speed - 2 Shaft with 110mm Clutches
P34A	5 Speed
P35A	5 Speed
PF4	4 Speed - 2 Shaft with 116mm Clutches
PGRA	5 Speed
PL5X	4 Speed - 2 Shaft with 116mm Clutches
PVGA	TBA
PVLA	TBA
PX4B	4 Speed - 3 Shaft with 120mm Clutches

CODE	DESCRIPTION
PY8A	4 Speed - 2 Shaft with 116mm Clutches
R0	4 Speed - 3 Shaft with 120mm & 123mm
S24A	4 Speed - 3 Shaft with 110mm Clutches
S4RA	4 Speed - 2 Shaft with 110mm Clutches
S4XA	4 Speed - 3 Shaft with 116mm Clutches
S5	4 Speed - 2 Shaft with 110mm Clutches
SDMA	TBA
SKWA	4 Speed - 3 Shaft with 116mm Clutches
SLXA	4 Speed - 2 Shaft with 110mm Clutches
SLYA	CVT
SMLA	TBA
SMMA	CVT
SMVA	CVT
SP7A	4 Speed - 3 Shaft with 116mm Clutches
SPCA	5 Speed - 3 Shaft
SPSA	TBA
SWRA	CVT
SYRA	CVT
SZCA	CVT

HYUNDAI / KIA

A4CF2

2005-On

KITS

*Add Suffix SK for Super Kit

ILL	Description	Years	Friction Module	Steel Module	Overhaul Kit	Banner Kit	Master Kit
N I	Rebuilding Kit - A4CF2 with pistons	05-On	123752D	123753D	123806A	123907LS	123907
N I	Rebuilding Kit - A4CF2 without pistons	05-On	123752D	123753D	123806	123907XLS	123907X

FRICTION CLUTCHES

ILL	ALTO No.	REF No.	Description	Spec	Year	Qty	Notes
N I	123700A170	45426-23000	Underdrive	.067/1.70	05-On	3	HEG - 30T - OD: 5.710" - PLNI
N I	123702A170	45650-2330	2nd Brake	.067/1.70	05-On	4	HEG - 30T - OD: 6.180" - SB
N I	123704A170	45544-23300	Reverse - Waved	.067/1.70	05-On	3	HEG - 30T - OD: 5.870" - PLNI
N I	123706A173	45626-23310	Low/Reverse	.068/1.73	05-On	6	HEG - 30T - OD: 6.280" - SB
N I	123708C173	45524-23300	Overdrive	.068/1.73	05-On	4	HEG - 30T - OD: 5.390" - PLNI

STEEL CLUTCHES

ILL	ALTO No.	REF No.	Description	Spec	Year	Qty	Notes
N I	123701A203	45426-23000	Underdrive	.080/2.03	05-On	3	20T - ID: 4.770"
N I	123703A185	45650-23300	2nd Brake	.073/1.85	05-On	1	14T - ID: 5.130"
N I	123703A300	45650-23300	2nd Brake	.119/3.02	05-On	1	14T - ID: 5.130"
N I	123761A	45650-23300	2nd Brake with Step	.121/3.07	05-On	1	14T - ID: 5.131"
N I	123705A300	45544-23300	Reverse	.119/3.02	05-On	3	20T - ID: 5.090"
N I	123707A220	45626-23310	Low/Reverse	.087/2.21	05-On	1	14T - ID: 5.540"
N I	123707A102	45626-23310	Low/Reverse	.040/1.01	05-On	5	14T - ID: 5.540"
N I	123709A250	45524-23300	Overdrive	.098/2.49	05-On	4	5T - ID: 4.380"

ELECTRONIC CONTROL COMPONENTS

ILL	ALTO No.	REF No.	Description	Spec	Year	Qty	Notes
N I	123504	46308-23000	Wire Harness A4CF1, A4CF2 OEM		05-On	1	
N I	123504A	46307-23010	Wire Harness A4CF1, A4CF2 OEM		05-On	1	
N I	123505	46313-23000	Solenoid Assembly Pack (5) OEM		05-On	1	
N I	123506	46313-23010	Solenoid VFS EPC OEM		05-On	1	

MOLDED PISTONS

ILL	ALTO No.	REF No.	Description	Spec	Year	Qty	Notes
KT	123672	NA	Piston Kit		05-On	1	3 pistons

HYUNDAI / KIA

A5CF1, A5CF2

2005-11

KITS

*Add Suffix SK for Super Kit

ILL	Description	Years	Friction Module	Steel Module	Overhaul Kit	Banner Kit	Master Kit
KT	Rebuilding Kit with molded pistons	05-11	123752E	123753E	123806B	123907ALS	123907A
KT	Rebuilding Kit without molded pistons	05-11	123752E	123753E	123806BX	123907AXLS	123907AX

FRICTION CLUTCHES

ILL	ALTO No.	REF No.	Description	Spec	Year	Qty	Notes
N I	123704	45445-39000	Reverse - Waved	.067/1.70	05-11	3	Tan - 30T - OD: 5.869" - PL
N I	123712A173	NA	Direct	.068/1.73	05-11	5	HEG - 30T - OD: 4.370" - PLNI
N I	123702	MD-759405	2nd Brake	.067/1.70	05-11	4	Tan - 30T - OD: 4.815" - PL
N I	123714-173	45682-23800	Reduction Brake	.068/1.73	05-11	5	HEG - 28T - OD: 4.150" - PLNI
N I	123708C173	45524-23300	Overdrive	.068/1.73	05-11	4	HEG - 30T - OD: 5.390" - PLNI
N I	123700A170	45524-23300	Underdrive	.067/1.70	05-11	3	HEG - 30T - OD: 5.710" - PLNI
N I	123706A173	45626-2331	Low/Reverse	.068/1.73	05-11	6	HEG - 30T - OD: 6.280" - SB

STEEL CLUTCHES

ILL	ALTO No.	REF No.	Description	Spec	Year	Qty	Notes
N I	123705A300	45544-2330	Reverse	.119/3.02	05-11	3	20T - ID: 5.090"
N I	123713A208	45561-23800	Direct	.082/2.08	05-11	5	36T - ID: 3.568"
N I	123703A300	45544-2330	2nd Brake	.119/3.02	05-11	2	14T - ID: 5.130"
N I	123715-282	45682-23800	Reduction Brake	.111/2.82	05-11	5	18T - ID: 3.298"
N I	123709A250	45524-2330	Overdrive	.098/2.49	05-11	4	5T - ID: 4.380"
N I	123701A203	45426-2300	Underdrive	.080/2.03	05-11	3	20T - ID: 4.770"
N I	123707A102	45626-2331	Low/Reverse	.040/1.01	05-11	5	14T - ID: 5.540"

MOLDED PISTONS

ILL	ALTO No.	REF No.	Description	Spec	Year	Qty	Notes
N I	123673	NA	Piston Kit		05-11	1	2 pistons

HYUNDAI / KIA

A5GF1

2006-On

KITS

*Add Suffix SK for Super Kit

ILL	Description	Years	Friction Module	Steel Module	Overhaul Kit	Banner Kit	Master Kit
KT	Rebuilding Kit - A5GF1	06-On	123752C	123753C	123804	123905LS	123905

FRICTION CLUTCHES

ILL	ALTO No.	REF No.	Description	Spec	Year	Qty	Notes
N I	123704	45445-39000	Reverse	.067/1.70	06-On	3	Tan - 30T - OD: 5.869" - PL
N I	123708A	NA	Overdrive - wave	.067/1.70	06-On	5	Tan - 28T - OD: 5.357" - PLNI
N I	123702	MD-759405	2nd Brake	.067/1.70	06-On	4	Tan - 30T - OD: 4.815" - PL
N I	123706	MD-761304	Low/Reverse	.067/1.70	06-On	7	Tan - 30T - OD: 6.183" - PL
N I	123708B	NA	Underdrive - wave	.067/1.70	06-On	5	Tan - 27T - OD: 5.357" - PLNI
N I	123712-168	NA	Direct	.066/1.68	06-On	4	Tan - 30T - OD: 3.996" - PLNI

STEEL CLUTCHES

ILL	ALTO No.	REF No.	Description	Spec	Year	Qty	Notes
N I	123705	NA	Reverse	.071/1.80	06-On	3	20T - ID: 5.250"
N I	123709	NA	Overdrive	.099/2.51	06-On	5	20T - ID: 5.619"
N I	123703	NA	2nd Brake	.099/2.51	06-On	5	20T - ID: 5.619"
N I	123761	NA	2nd Brake - stepped	.099/2.51	06-On	1	17T - ID: 5.127"
N I	123703	NA	Low/Reverse	.099/2.51	06-On	1	17T - ID: 5.127"
N I	123703-102	NA	Low/Reverse	.040/1.02	06-On	6	17T - ID: 5.127"
N I	123701	NA	Underdrive	.071/1.80	06-On	5	20T - ID: 4.655"
N I	123713-290	NA	Direct	.115/2.92	06-On	4	20T - ID: 3.218"

ELECTRONIC CONTROL COMPONENTS

ILL	ALTO No.	REF No.	Description	Spec	Year	Qty	Notes
N I	123503	46313-39051	Solenoid OEM		06-On	1	

HARD PARTS

ILL	ALTO No.	REF No.	Description	Spec	Year	Qty	Notes
N I	123351	45830-26010	Differential 8 bolt ring gear Elantra		06-On	1	New Surplus

HYUNDAI / KIA

A5HF1

2006-On

KITS

*Add Suffix SK for Super Kit

ILL	Description	Years	Friction Module	Steel Module	Overhaul Kit	Banner Kit	Master Kit
KT	Rebuilding Kit - A5HF1	06-On	124752D	124753D	124804	124905LS	124905
KT	Rebuilding Kit - A5HF1 AZERA	06-On	124752E	124753D	124804	124905ALS	124905A

FRICTION CLUTCHES

ILL	ALTO No.	REF No.	Description	Spec	Year	Qty	Notes
N I	124702	NA	Reverse	.067/1.70	06-On	2	Tan - 30T - OD:7.030" - PL
N I	124708	45422-39501	Overdrive	.067/1.70	06-On	1	Tan - 30T - OD: 5.827" - PL
N I	124708A250	NA	Overdrive (1 sided) - internal spline	.098/2.49	06-On	3	Tan - 30T - OD: 5.827" - PL
N I	124709A250	NA	Overdrive (1 sided) - external spline	.098/2.49	06-On	3	Tan - 20T - ID: 4.850" - PL
N I	124712-185	NA	Overdrive - AZERA	.073/1.85	06-On	1	HEG - 30T - OD: 6.062" - PL
N I	124712A272	NA	Overdrive Internal Spline - AZERA	.107/2.72	06-On	3	HEG - 30T - OD: 6.062" - PL
N I	124713A272	NA	Overdrive External Spline - AZERA	.107/2.72	06-On	3	HEG - 5T - ID: 4.862" - PL
N I	124702	NA	2nd Brake	.067/1.70	06-On	1	Tan - 30T - OD: 7.030" - PL
N I	124706B235	NA	2nd Brake (1 sided) - internal spline	.093/2.36	06-On	3	Tan - 30T - OD: 7.030" - PL
N I	124707A235	NA	2nd Brake (1 sided) - external spline	.093/2.36	06-On	3	Tan - 16T - ID: 5.999" - PL
N I	124706	MD-759407	Low/Reverse	.067/1.70	06-On	6	Tan - 30T - OD: 7.030" - PL
N I	124700	NA	Underdrive	.067/1.70	06-On	4	Tan - 30T - OD: 5.827" - PL
N I	124710-170	45562-39500	Direct	.067/1.70	06-On	3	Tan - 30T - OD: 4.80" - PL

STEEL CLUTCHES

ILL	ALTO No.	REF No.	Description	Spec	Year	Qty	Notes
N I	124705	MD-760480	Reverse	.071/1.80	06-On	2	20T - ID: 6.03"
N I	124713-300	NA	Overdrive External Spline - AZERA	.119/3.02	06-On	1	5T - ID: 4.852"
N I	124713-500	NA	Overdrive Internal Spline - AZERA	.197/5.00	06-On	1	5T - ID: 4.852"
N I	124707	NA	Low/Reverse	.039/0.99	06-On	5	16T - ID: 6.294"
N I	124701	NA	Underdrive	.071/1.80	06-On	4	20T - ID: 4.850"
N I	124761-400	NA	Direct	.158/4.01	06-On	3	20T - ID: 3.47"

ELECTRONIC CONTROL COMPONENTS

ILL	ALTO No.	REF No.	Description	Spec	Year	Qty	Notes
N I	123503	46313-39051	Solenoid OEM		06-On	1	

HARD PARTS

ILL	ALTO No.	REF No.	Description	Spec	Year	Qty	Notes
N I	123351	45830-26010	Differential 8 bolt ring gear Elantra		06-On	1	New Surplus
N I	197320	BW-SP-2	Sprag, Torque Converter	24 element	06-On	1	

HYUNDAI / KIA

A6GF1,A6GF2

2009-On

KITS

*Add Suffix SK for Super Kit

ILL	Description	Years	Friction Module	Steel Module	Overhaul Kit	Banner Kit	Master Kit
KT	Rebuilding Kit with molded pistons	09-On	212752	212753	212800	212901LS	212901
KT	Rebuilding Kit without molded pistons	09-On	212752	212753	212800X	212901XLS	212901X

FRICTION CLUTCHES

ILL	ALTO No.	REF No.	Description	Spec	Year	Qty	Notes
N I	212700-183	45670-26000	2-6 Brake	.072/1.83	09-On	4	HEG - 36T - OD: 6.657" - SB
N I	212702-213	45425-26000	3-5-Reverse (1 sided) - internal spline	.084/2.13	09-On	4	HEG - 30T - OD: 4.960" - SB
N I	212703A205	45425-26000	3-5-Reverse (1 sided) - external spline	.081/1.06	09-On	3	HEG - 27T - ID: 4.369" - SB
N I	212703A250	45425-26000	3-5-Reverse (1 sided) - external spline	.098/2.49	09-On	3	HEG - 27T - ID: 4.369" - SB
N I	212704-178	45525-26000	Overdrive	.070/1.78	09-On	4	HEG - 36T - OD: 6.005" - SB
N I	212706-185	45625-26000	Underdrive	.073/1.85	09-On	3	HEG - 36T - OD: 6.299" - SB
N I	212708-183	45641-26000	Low/Reverse	.072/1.83	09-On	5	HEG - 36T - OD: 6.655" - SB

STEEL CLUTCHES

ILL	ALTO No.	REF No.	Description	Spec	Year	Qty	Notes
N I	212701-200	45670-26000	2-6 Brake	.079/2.01	09-On	3	7T - ID: 5.914"
N I	212705-270	45525-26000	Overdrive	.106/2.69	09-On	3	27T - ID: 5.285"
N I	212705-230	45525-26000	Overdrive Bottom Apply	.091/2.31	09-On	1	27T - ID: 5.285"
N I	212707-180	45625-26000	Underdrive	.071/1.80	09-On	3	7T - ID: 5.559"
N I	212709-100	45641-26000	Low/Reverse	.039/1.00	09-On	5	15T - ID: 5.976"

FILTERS

ILL	ALTO No.	REF No.	Description	Spec	Year	Qty	Notes
N I	214940	46321-3B600	Filter		09-On	1	

ELECTRONIC CONTROL COMPONENTS

ILL	ALTO No.	REF No.	Description	Spec	Year	Qty	Notes
N I	212501	46313-3B030	Solenoid (OEM)		09-On	1	

MOLDED PISTONS

ILL	ALTO No.	REF No.	Description	Spec	Year	Qty	Notes
N I	212670	NA	Piston Kit (2 pistons)		09-On	1	
N I	212300	NA	3-5-Reverse Retainer (OEM)		09-On	1	
N I	212301	NA	Overdrive Retainer (OEM)		09-On	1	

HARD PARTS

ILL	ALTO No.	REF No.	Description	Spec	Year	Qty	Notes
N I	212350	45830-3B201	Differential 10 bolt ring gear Sonata		09-On	1	New Surplus

HYUNDAI / KIA

A6LF1,A6LF2

2009-On

KITS

*Add Suffix SK for Super Kit

ILL	Description	Years	Friction Module	Steel Module	Overhaul Kit	Banner Kit	Master Kit
KT	Rebuilding Kit with molded pistons	09-On	213752	213753	213800	213901LS	213901
KT	Rebuilding Kit without molded pistons	09-On	213752	213753	213800X	213901XLS	213901X

FRICTION CLUTCHES

ILL	ALTO No.	REF No.	Description	Spec	Year	Qty	Notes
N I	213700-183	45670-3B400	2-6 Brake	.072/1.83	09-On	4	HEG - 36T - OD: 7.439" - WF
N I	213702-230	45425-3B400	3-5-Reverse (1 sided) - internal spline	.091/2.31	09-On	5	HEG - 30T - OD: 5.617" - SB
N I	213703A230	45425-3B400	3-5-Reverse (1 sided) - external spline	.091/2.31	09-On	4	HEG - 27T - ID: 4.781" - SB
N I	213703A250	45525-3B600	3-5-Reverse (1 sided) - external spline	.098/2.49	09-On	1	HEG - 27T - ID: 4.781" - SB
N I	213704-173	45525-3B400	Overdrive	.068/1.73	09-On	5	HEG - 36T - OD: 6.682" - SB
N I	213706-173	45625-3B401	Underdrive	.068/1.73	09-On	4	HEG - 36T - OD: 7.049" - SB
N I	213708-175	45641-3B400	Low/Reverse	.069/1.75	09-On	6	HEG - 40T - OD: 7.505" - SB

STEEL CLUTCHES

ILL	ALTO No.	REF No.	Description	Spec	Year	Qty	Notes
N I	213701-343	45670-3B400	2-6 Brake	.135/3.43	09-On	3	7T - ID: 6.580"
N I	213705-323	45525-3B400	Overdrive	.127/3.23	09-On	4	27T - ID: 5.917"
N I	213705-300	45525-3B400	Overdrive Bottom Apply	.118/3.00	09-On	1	27T - ID: 5.917"
N I	213707-178	45625-3B401	Underdrive	.070/1.78	09-On	4	7T - ID: 6.191"
N I	213709-102	45641-3B400	Low/Reverse	.040/1.02	09-On	6	15T - ID: 6.820"

FILTERS

ILL	ALTO No.	REF No.	Description	Spec	Year	Qty	Notes
N I	213940	46321-26000	Filter		09-On	1	

ELECTRONIC CONTROL COMPONENTS

ILL	ALTO No.	REF No.	Description	Spec	Year	Qty	Notes
N I	213501	46313-3B600	Solenoid (OEM)		09-On	1	
N I	213502	46313-3B661	Solenoid (OEM)		09-On	3	
N I	212501	46313-3B030	Solenoid (OEM)		09-On	1	
N I	213618	42700-26000	Neutral Switch		09-On	1	

MOLDED PISTONS

ILL	ALTO No.	REF No.	Description	Spec	Year	Qty	Notes
N I	213670	NA	Piston Kit (2 pistons)		09-On	1	
N I	213300	NA	Clutch Balance (OEM)		09-On	1	
N I	213301	NA	Overdrive Balance (OEM)		09-On	1	

HARD PARTS

ILL	ALTO No.	REF No.	Description	Spec	Year	Qty	Notes
N I	213350	46100-3B000	Oil Pump Assembly		09-On	1	
N I	212351	45830-3B201	Differential 10 bolt ring gear Sonata		09-On	1	New Surplus

HYUNDAI / KIA

A6MF1,A6MF2

2009-On

KITS

*Add Suffix SK for Super Kit

ILL	Description	Years	Friction Module	Steel Module	Overhaul Kit	Banner Kit	Master Kit
KT	Rebuilding Kit with molded pistons	09-On	214752	214753	214800	214901LS	214901
KT	Rebuilding Kit without molded pistons	09-On	214752	214753	214800X	214901XLS	214901X

MISCELLANEOUS GASKETS & KIT COMPONENTS

ILL	ALTO No.	REF No.	Description	Spec	Year	Qty	Notes
N I	214818	NA	Gasket - side cover	Poly	09-On	1	

FRICTION CLUTCHES

ILL	ALTO No.	REF No.	Description	Spec	Year	Qty	Notes
N I	214700-183	45670-3B600	2-6 Brake	.072/1.83	09-On	4	HEG - 36T - OD: 6.970" - WF
N I	214702-208	45425-3B600	3-5-Reverse (1 sided) - internal spline	.083/2.08	09-On	4	HEG - 30T - OD: 5.262" - SB
N I	214703A210	45425-3B600	3-5-Reverse (1 sided) - external spline	.083/2.11	09-On	3	HEG - 27T - ID: 4.575" - SB
N I	214703A250	45425-3B600	3-5-Reverse (1 sided) - external spline	.098/2.49	09-On	1	HEG - 27T - ID: 4.575" - SB
N I	214704-170	45525-3B800	Overdrive	.067/1.7	09-On	5	HEG - 36T - OD: 6.014" - SB
N I	214706-173	45625-3B601	Underdrive	.068/1.73	09-On	3	HEG - 36T - OD: 6.575" - PLNI
N I	214708-173	45641-3B600	Low/Reverse	.068/1.73	09-On	5	HEG - 36T - OD: 6.947" - SB

STEEL CLUTCHES

ILL	ALTO No.	REF No.	Description	Spec	Year	Qty	Notes
N I	214701-210	45670-3B600	2-6 Brake	.083/2.11	09-On	4	7T - ID: 6.230"
N I	212705-210	45525-3B800	Overdrive	.083/2.11	09-On	4	27T - ID: 5.281"
N I	212705-230	45525-26000	Overdrive Bottom Apply	.091/2.31	09-On	1	27T - ID: 5.285"
N I	214707-178	45625-3B601	Underdrive	.070/1.78	09-On	3	7T - ID: 5.837"
N I	214709-102	45641-3B600	Low/Reverse	.040/1.02	09-On	5	15T - ID: 6.291"

FILTERS

ILL	ALTO No.	REF No.	Description	Spec	Year	Qty	Notes
N I	214940	46321-3B600	Filter		09-On	1	

ELECTRONIC CONTROL COMPONENTS

ILL	ALTO No.	REF No.	Description	Spec	Year	Qty	Notes
N I	212501	46313-3B030	Solenoid (OEM)		09-On	1	
N I	213501	46313-3B600	Solenoid (OEM)		09-On	1	
N I	213504	46313-3B675	Solenoid (OEM)		09-On	2	
N I	213505	46313-3B673	Solenoid (OEM)		09-On	1	
N I	213618	42700-2600	Neutral Switch		09-On	1	

MOLDED PISTONS

ILL	ALTO No.	REF No.	Description	Spec	Year	Qty	Notes
N I	214670	NA	Piston Kit (2 Pistons)		09-On	1	
N I	214300	NA	3-5-Reverse Retainer (OEM)		09-On	1	
N I	212301	NA	Overdrive Retainer (OEM)		09-On	1	

HARD PARTS

ILL	ALTO No.	REF No.	Description	Spec	Year	Qty	Notes
N I	212350	45830-3B201	Differential 10 bolt ring gear Sonata		09-On	1	New Surplus

HYUNDAI / KIA

A8LR1

2012-On

KITS

*Add Suffix SK for Super Kit

ILL	Description	Years	Friction Module	Steel Module	Overhaul Kit	Banner Kit	Master Kit
KT	Rebuilding Kit with Pistons	02-On	226752	226753	226800	226901LS	226901
KT	Rebuilding Kit without Pistons	02-On	226752	226753	226800X	226901XLS	226901X

FRICTION CLUTCHES

ILL	ALTO No.	REF No.	Description	Spec	Year	Qty	Notes
NI	226700A180	NA	8th Low-Reverse (1 sided) - internal spline	.071/1.80	12-On	5	HEG - 36T - OD: 7.000" Blocked
NI	226701A180	NA	8th Low-Reverse (1 sided) - external spline	.071/1.80	12-On	4	HEG - 24T - ID: 6.260" - Blocked
NI	226701A360	NA	8th Low-Reverse Bottom (1 sided) - external spline	.142/3.60	12-On	1	HEG - 24T - ID: 6.260" - Blocked
NI	226702-175	NA	6th Clutch (1 sided) - internal spline	.069/1.75	12-On	5	HEG - 30T - OD: 6.580" - SEG
NI	226704A280	NA	2-7th Clutch (1 sided) - internal spline	.110/2.79	12-On	4	HEG - 30T - OD: 6.860" - SEG
NI	226705A280	NA	2-7th Clutch (1 sided) - external spline	.110/2.79	12-On	3	HEG - 23T - OD: 6.230" - SEG
NI	226705A338	NA	2-7th Clutch Bottom (1 sided) - external spline	.133/3.38	12-On	1	HEG - 23T - OD: 6.230" - SEG
NI	226706A180	NA	3-5-Reverse (1 sided) - internal spline	.071/1.80	12-On	7	HEG - 30T - OD: 5.680" - SEG
NI	226707A180	NA	3-5-Reverse (1 sided) - external spline	.071/1.80	12-On	7	HEG - 30T - ID: 4.940" - SEG
NI	226708A152	NA	Underdrive (1 sided) - internal spline	.060/1.52	12-On	7	HEG - 48T - OD: 5.300" - SEG
NI	226709A152	NA	Underdrive (1 sided) - external spline	.060/1.52	12-On	7	HEG - 36T -ID: 4.560" - SEG
NI	226710A193	NA	4th Overdrive (1 sided) - internal spline	.076/1.93	12-On	6	HEG - 30T -OD: 5.640" - SEG
NI	226711A193	NA	4th Overdrive (1 sided) - external spline	.076/1.93	12-On	6	HEG - 30T - ID: 4.780" - SEG

STEEL CLUTCHES

ILL	ALTO No.	REF No.	Description	Spec	Year	Qty	Notes
NI	226703-180	NA	6th Clutch	.071/1.80	12-On	5	30T - ID: 5.750"

PISTONS

ILL	ALTO No.	REF No.	Description	Spec	Year	Qty	Notes
NI	226670	NA	Piston Kit		12-On	1	

HYUNDAI / KIA

F5A51

2002-On

KITS

*Add Suffix SK for Super Kit

ILL	Description	Years	Friction Module	Steel Module	Overhaul Kit	Banner Kit	Master Kit
KT	Rebuilding Kit	02-On	124752C	124753C	124800A	124901CLS	124901C

FRICTION CLUTCHES

ILL	ALTO No.	REF No.	Description	Spec	Year	Qty	Notes
N I	124700	NA	Underdrive Front	.067/1.7	02-On	4	Tan - 30T - OD: 5.827" - PL
N I	124702	NA	2nd Brake	.067/1.7	02-On	4	Tan - 30T - OD: 7.030" - PL
N I	124704	NA	Reverse	.067/1.7	02-On	2	Tan - 30T - OD: 6.535" - PL
N I	124706B235	NA	Low / Reverse (1 sided) - internal spline	.093/2.36	02-On	3	HEG - 30T - OD: 7.030" - PL
N I	124707A235	NA	Low / Reverse (1 sided) - external spline	.093/2.36	02-On	3	HEG - 16T - ID: 5.999" - PL
N I	124706A185	NA	Low / Reverse	.073/1.86	02-On	1	HEG - 30T - OD: 7.030" - PL
N I	124708A250	NA	Overdrive (1 sided) - internal spline	.098/2.49	02-On	3	HEG - 30T - OD: 5.827" - SP
N I	124709A250	NA	Overdrive (1 sided) - external spline	.098/2.49	02-On	3	HEG - 20T - ID: 4.850" - SP
N I	124708	NA	Overdrive	.067/1.7	02-On	1	Tan - 30T - OD: 5.827" - PL
N I	124710-170	NA	Direct	.067/1.7	02-On	5	HEG - 30T - OD: 4.800" - PL

STEEL CLUTCHES

ILL	ALTO No.	REF No.	Description	Spec	Year	Qty	Notes
N I	124701	NA	Underdrive Front	.071/1.8	02-On	4	20T - ID: 4.850"
N I	124703	NA	2nd Brake	.099/2.5	02-On	2	16T - ID: 6.031"
N I	124703-390	NA	2nd Brake	.155/3.94	02-On	3	16T - ID: 6.031"
N I	124705	NA	Reverse	.071/1.8	02-On	2	20T - ID: 6.031"
N I	124711-250	NA	Direct	.099/2.5	02-On	4	20T - ID: 3.470"

HYUNDAI / KIA

JF405E JATCO

2003-On

KITS

*Add Suffix SK for Super Kit

ILL	Description	Years	Friction Module	Steel Module	Overhaul Kit	Banner Kit	Master Kit
KT	Rebuilding Kit with pistons	03-On	191752	191753	191800	191901LS	191901
KT	Rebuilding Kit without pistons	03-On	191752	191753	191800X	191901XLS	191901X

FRICTION CLUTCHES

ILL	ALTO No.	REF No.	Description	Spec	Year	Qty	Notes
N I	191700-157	45417-02701	Low	.062/1.57	03-On	7	HEG - 38T - OD: 4.313" - PLNI
N I	191702-157	45462-02700	Low/Reverse	.062/1.57	03-On	7	HEG - 36T - OD: 5.142" - PLNI
N I	191704-157	45486-02700	Reverse	.062/1.57	03-On	2	HEG - 36T - OD: 4.343" - PLNI
N I	191704A157	NA	Reverse	.064/1.63	03-On	2	HEG - 38T - OD: 4.343" - PLNI
N I	191706-157	45445-02700	High	.062/1.57	03-On	3	HEG - 24T - OD: 3.508" - PLNI

STEEL CLUTCHES

ILL	ALTO No.	REF No.	Description	Spec	Year	Qty	Notes
N I	191701-142	45421-02700	Low	.056/1.42	03-On	7	36T - ID: 3.975"
N I	191703-180	45463-02700	Low / Reverse	.071/1.80	03-On	7	10T - ID: 4.758"
N I	191705-198	45487-02700	Reverse	.078/1.98	03-On	2	16T - ID: 3.940"
N I	191707-200	45449-02700	High	.079/2.01	03-On	3	36T - ID: 2.935"

FILTERS

ILL	ALTO No.	REF No.	Description	Spec	Year	Qty	Notes
N I	175942	45611-02700	Filter JF405E Hyundai		03-On	1	

BANDS

ILL	ALTO No.	REF No.	Description	Spec	Year	Qty	Notes
N I	191950	45460-02700	Band JF402E/JF405E		03-On	1	

MOLDED PISTONS

ILL	ALTO No.	REF No.	Description	Spec	Year	Qty	Notes
KT	191670	NA	Piston Kit		03-On	1	1 piston

MAZDA

MAZDA, GM, FORD, ISUZU
F3A 1981-97

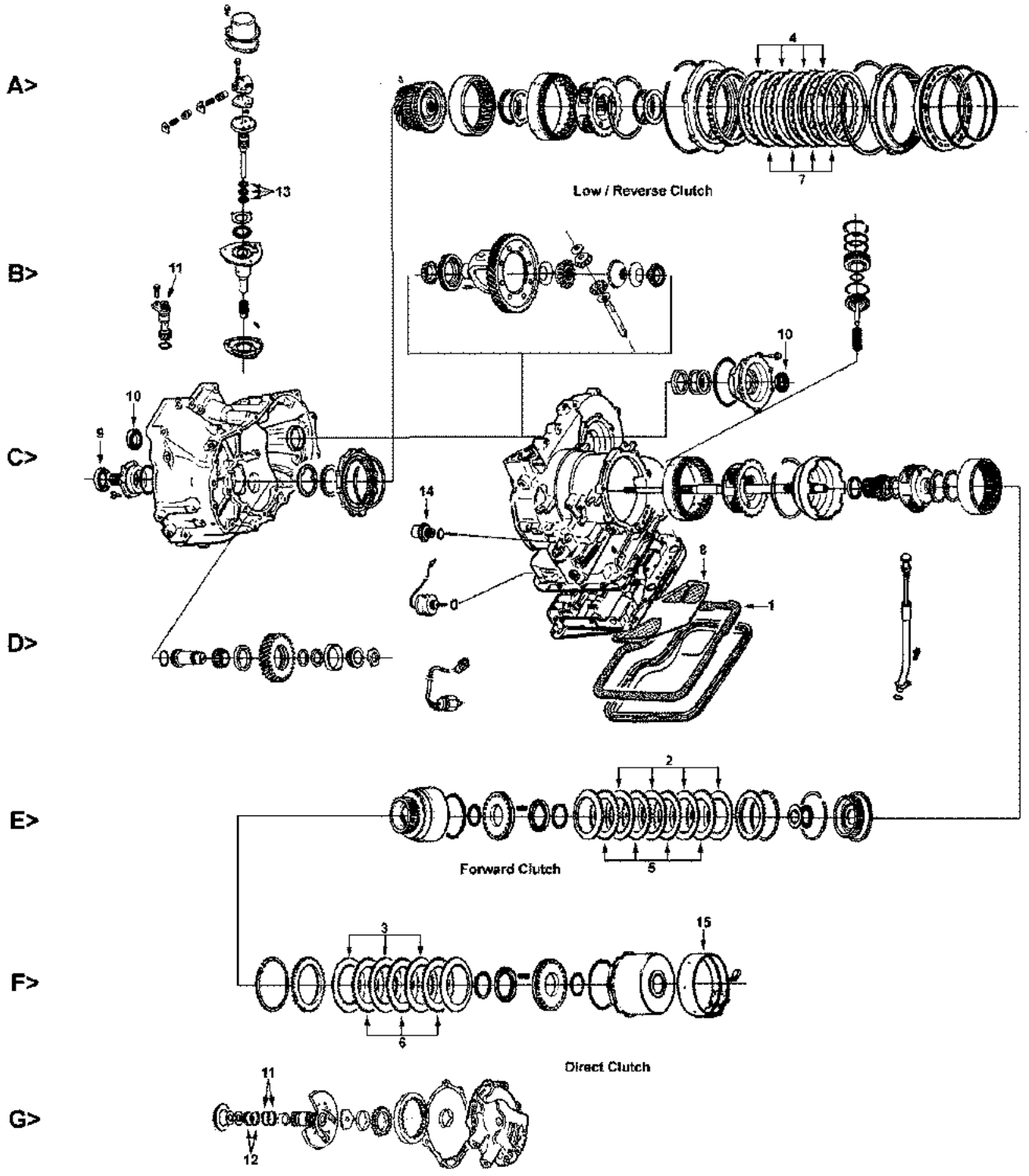

MAZDA

MAZDA, GM, FORD, ISUZU
F3A 1981-97

KITS

*Add Suffix SK for Super Kit

ILL	Description	Years	Friction Module	Steel Module	Overhaul Kit	Banner Kit	Master Kit
KT	Rebuilding Kit - F3A combo	81-93	063752	063753	063800	063901LS	063901
KT	Rebuilding Kit - Ford Aspire	94-97	063752B	063753B	063802	063901ALS	063901A

MISCELLANEOUS GASKETS & KIT COMPONENTS

ILL	ALTO No.	REF No.	Description	Spec	Year	Qty	Notes
1D	063816	FT01-19-835	Gasket, Oil pan - all	Cork/Rub	81-97	1	

FRICTION CLUTCHES

ILL	ALTO No.	REF No.	Description	Spec	Year	Qty	Notes
2E	042700	Various	Forward	.061/1.55	81-97	3-4	Tan - 44T - OD: 4.530" - WF
3F	042700	Various	Direct	.061/1.55	81-97	3	Tan - 44T - OD: 4.530" - WF
4A	063702	Various	Low / Reverse	.061/1.55	81-97	4-5	HEG - 62T - OD: 5.790" - WF

STEEL CLUTCHES

ILL	ALTO No.	REF No.	Description	Spec	Year	Qty	Notes
5E	063701	Various	Forward	.063/1.6	81-97	3-4	28T - ID: 3.625"
7A	063703	FT01-19-609	Low / Reverse	.059/1.5	81-97	4-5	37T - ID: 5.123"
N I	063703A	FT01-19-608	Low / Reverse - dished		81-97	1	

BANDS

ILL	ALTO No.	REF No.	Description	Spec	Year	Qty	Notes
15F	063950	0338-19-360B	Brake	Tan	81-97	1	1-3/4" wide

FILTERS

ILL	ALTO No.	REF No.	Description	Spec	Year	Qty	Notes
8D	063940	FT01-19-815	Filter - Shallow pan (Mazda/Ford)		81-88	1	with oval intake
N I	063940A	E21-19-815C	Filter - Jatco F3A L/U, Non L/U		81-93	1	
8D	063944	E7GZ-7A098A	Filter - (Mazda/Ford)		87-90	1	
8D	063942	94428489	Filter - Deep pan (Isuzu/GM) with Tube		87-93	1	
8D	063946	94413320	Filter - Deep pan (Isuzu/GM) without Tube		85-86	1	
8D	063948	E9BZ-7A098A	Filter - Deep pan (Ford Festiva, Lazer, Tracer)		89-93	1	

METAL CLAD SEALS

ILL	ALTO No.	REF No.	Description	Spec	Year	Qty	Notes
9C	063400	FT01-19-223	Front Pump		81-97	1	
10C	063401	F003-27-238A	Axle (except GM) - without flange		81-97	2	can substitute 059401
10C	048401	97070182	Axle (GM) - with flange		89-93	2	can substitute 048401
11B	063402	99586-08166	Speedometer		81-97	1	

SEALING RINGS

ILL	ALTO No.	REF No.	Description	Spec	Year	Qty	Notes
KT	063600	G700	Sealing Ring Kit - 4M/4T		81-97	1	
11G	042100	0338-19-256	Oil Pump Stator - Front (Direct clutch)	1.7323	81-97	2	
12G	042101	0338-19-257	Oil Pump Stator - Rear (Forward clutch)	1.6929	81-97	2	
13B	063100	FT01-19-655	Governor	Teflon	81-97	3	
N I	063101	FT01-19-538	Lube Seal	Teflon	81-97	1	

MAZDA

MAZDA, GM, FORD, ISUZU

F3A 1981-97

BUSHINGS

ILL	ALTO No.	REF No.	Description	Spec	Year	Qty	Notes
KT	063625	NA	Kit		81-97	1	

MODULATORS

ILL	ALTO No.	REF No.	Description	Spec	Year	Qty	Notes
14C	042500	1758-19-823	Modulator - except Aspire		81-93	1	
14C	063500	F4BZ-7A377A	Modulator - Aspire		94-97	1	

MAZDA

MAZDA F4AEL 1990-99
FORD 4EAT Type F 1990-99

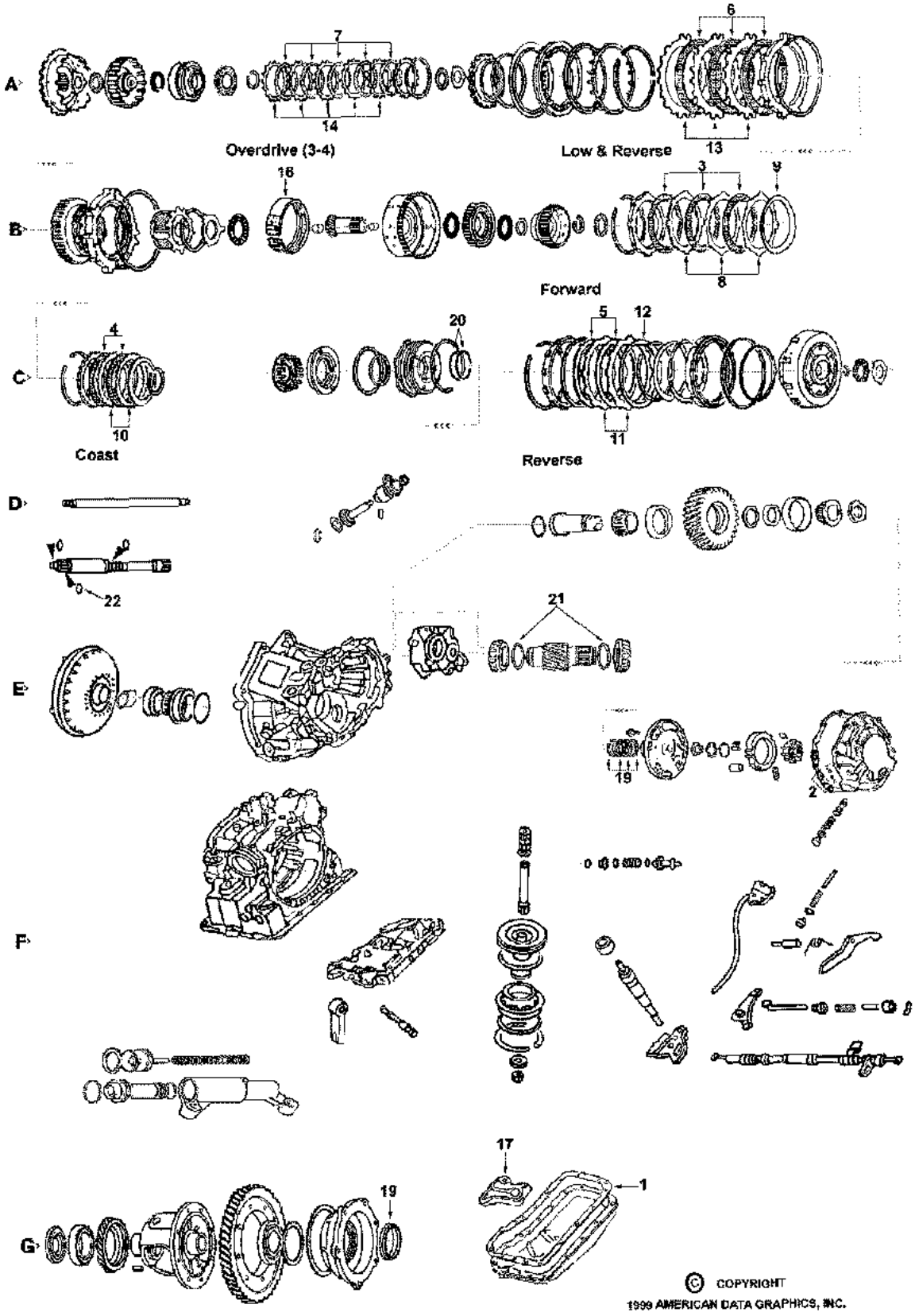

MAZDA

MAZDA F4AEL 1990-99
FORD 4EAT Type F 1990-99

KITS

*Add Suffix SK for Super Kit

ILL	Description	Years	Friction Module	Steel Module	Overhaul Kit	Banner Kit	Master Kit
KT	Rebuilding Kit - MAZDA with 2.3mm 3/4 Steels	90-91	081752	081753A	081802	081901LS	081901A
KT	Rebuilding Kit - MAZDA with 1.8mm 3/4 Steels	91-94	081752	081753	081802	081901LS	081901
KT	Rebuilding Kit - MAZDA with 3.3mm 3/4 Steel	95-99	081752	081753B	081802	081901LS	081903
KT	Rebuilding Kit - FORD with 1.8mm 3/4 Steels	90-96	081752	081753	081802	081901LS	081901
KT	Rebuilding Kit - FORD with 2.3mm 3/4 Steels	90-97	081752	081753A	081802	081901LS	081901A
KT	Rebuilding Kit - FORD with 3.3mm 3/4 Steels	98-99	081752	081753B	081802	081901LS	081903

MISCELLANEOUS GASKETS & KIT COMPONENTS

ILL	ALTO No.	REF No.	Description	Spec	Year	Qty	Notes
1G	081816	FU60-21-512B	Gasket, Oil pan	Cork/Rub	90-99	1	

FRICTION CLUTCHES

ILL	ALTO No.	REF No.	Description	Spec	Year	Qty	Notes
3B	081700	FW01-19-610	Forward	.063/1.6	90-99	3	HEG - 42T - OD: 4.974" - PL
4C	081702	FW01-19-590	Coast	.063/1.6	90-99	2	HEG - 16T - OD: 4.533" - PL
5C	081704	FW01-19-5J0	Reverse	.063/1.6	90-99	2	HEG - 45T - OD: 6.891" - PL
6A	081706	FW01-19-4F0	Low / Reverse	.063/1.6	90-99	4	HEG - 48T - OD: 7.073" - PL
7A	081708	FW30-19-370A	3/4 Clutch	.063/1.6	90-99	4	HEG - 22T - OD: 4.331" - SM

STEEL CLUTCHES

ILL	ALTO No.	REF No.	Description	Spec	Year	Qty	Notes
8B	081701	MFU61-19-571	Forward	.063/1.6	90-99	3	31T - ID: 4.353"
8B	081701-140	NA	Forward - PowerPack® Component	.055/1.4	90-99	AR	31T - ID: 4.353"
10C	081703	MFU60-19-621	Coast	.063/1.6	90-99	2	26T - ID: 3.861"
11C	081705	MFU61-19-561	Reverse	.063/1.6	90-99	2	32T - ID: 6.320"
13A	081707	FU61-19-451A	Low / Reverse	.063/1.6	90-99	4	16T - ID: 6.545"
14A	081709-180	FU64-19-334B	3/4 Clutch - use with F1CZ-7A262A piston	.071/1.8	90-96	4	38T - ID: 3.670"
14A	081709-230	F1CZ-7B442F	3/4 Clutch - use with F1CZ-7A262C piston	.091/2.3	90-97	4	38T - ID: 3.670"
14A	081709-330	FW30-19-334	3/4 Clutch	.130/3.3	98-99	3	38T - ID: 3.670"
14A	081709	FU64-19-334A	3/4 Clutch - selective	.061/1.6	90-99	4	38T - ID: 3.670"

PRESSURE PLATES

ILL	ALTO No.	REF No.	Description	Spec	Year	Qty	Notes
15B	081760-460	FU60-19-572A	Forward - backing	.181/4.6	90-99	1	
N I	081764-380	NA	3/4 Clutch	.150/3.8	90-99	1	
N I	081764-444	NA	3/4 Clutch	.175/4.44	90-99	1	

OEI® Original Equipment Improvements

ILL	ALTO No.	REF No.	Description	Spec	Year	Qty	Notes
KT	081755	NA	DrumSaver® Kit - Forward Clutch		90-99	1	Allows Reuse of worn drum
N I	081985	SK®F4AEL	Shift Kit®	Transgo®	90-99	1	

BANDS

ILL	ALTO No.	REF No.	Description	Spec	Year	Qty	Notes
16B	081950	FU60-21-310E	Brake	Tan	90-99	1	

MAZDA

MAZDA F4AEL 1990-99

FORD 4EAT Type F 1990-99

FILTERS

ILL	ALTO No.	REF No.	Description	Spec	Year	Qty	Notes
17G	081940	FU61-21-500B	Filter		90-99	1	
17G	081942	FW01-21-500	Filter AWD		90-99	1	

METAL CLAD SEALS

ILL	ALTO No.	REF No.	Description	Spec	Year	Qty	Notes
18E	074400	FU01-19-241A	Front Pump		90-99	1	
18G	063401	F003-27-238A	Axle		90-99	2	
N I	063402	99586-08166	Speedometer		90-99	1	

SEALING RINGS

ILL	ALTO No.	REF No.	Description	Spec	Year	Qty	Notes
KT	081600	B270	Sealing Ring Kit - 6M/9T		90-99	1	
KT	081600A	B270B	Sealing Ring Kit - 6M		90-99	1	without Accum. rings
KT	081601	NA	Sealing Ring Kit - Accum. Pistons - 6T		90-99	1	Teflon rings
KT	081601A	NA	Sealing Ring Kit - Accum. Pistons - 6R		90-99	1	Rubber rings

MAZDA

MAZDA - G4AEL, G4AHL, GF4AEL 1986-On
FORD - G4EAT, GF4EAT 1986-On

A>

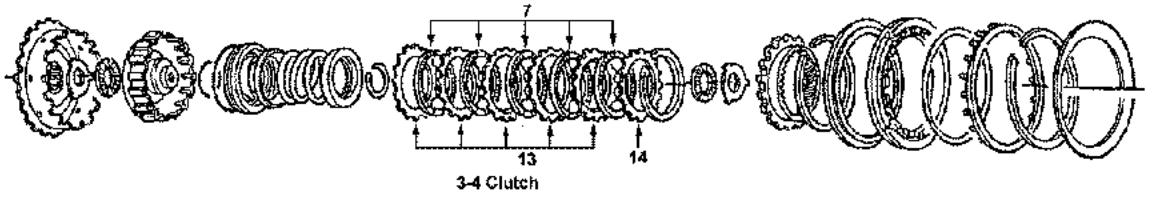

B>

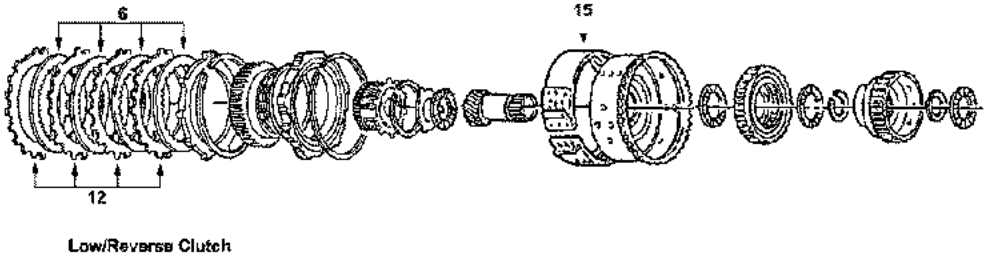

C>

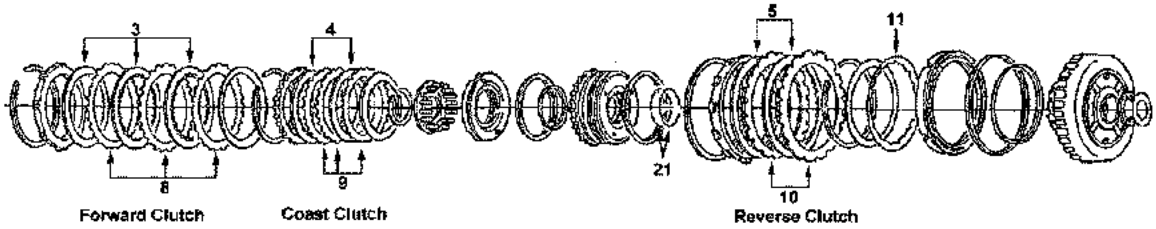

D>

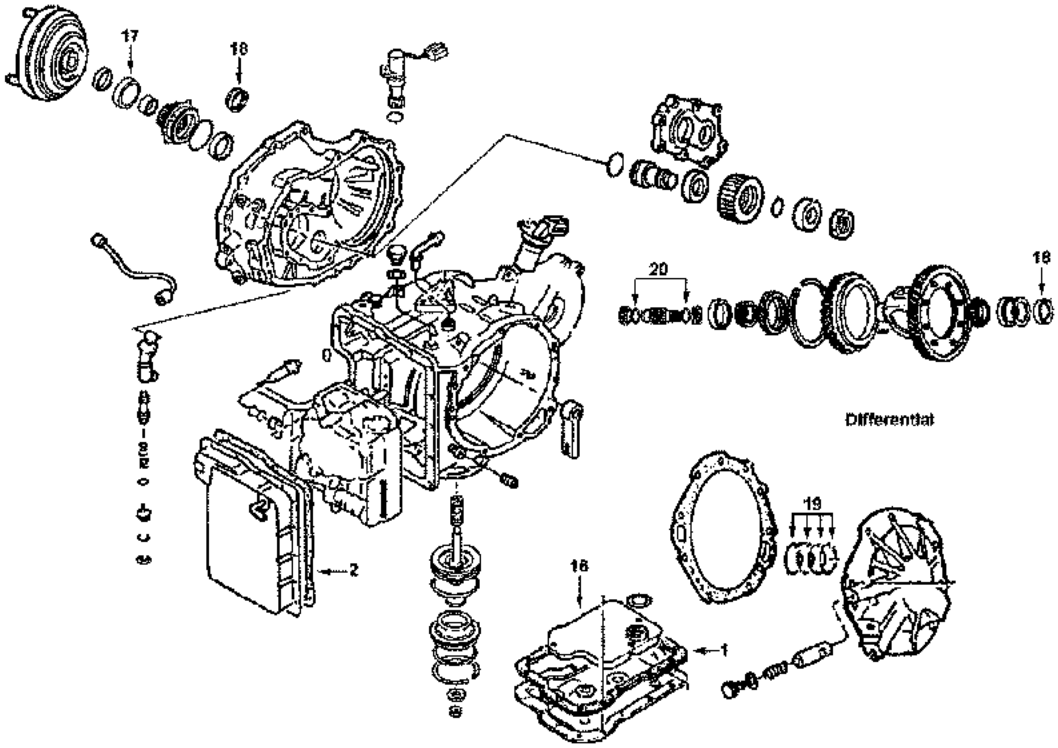

E>

F>

MAZDA

MAZDA - G4AEL, G4AHL, GF4AEL 1986-On
FORD - G4EAT, GF4EAT 1986-On

KITS

*Add Suffix SK for Super Kit

ILL	Description	Years	Friction Module	Steel Module	Overhaul Kit	Banner Kit	Master Kit
KT	Rebuilding Kit - MAZDA 626 & MX6	86-87	074752	074753	074800	074901LS	074901
KT	Rebuilding Kit - MAZDA 626 & MX6 Non Turbo	88-92	074752A	074753A	074802	074903LS	074903
KT	Rebuilding Kit - MAZDA 626 & MX6 Turbo	88-92	074752A	074753B	074802	074903LS	074905
KT	Rebuilding Kit - MAZDA 626 & MX6 2.0L	93-94	074752A	074753X	074802	074903LS	074903X
KT	Rebuilding Kit - MAZDA 626 & MX6 2.5L	93-On	074752D	074753C	074804	074907LS	074907
KT	Rebuilding Kit - MILLENIA 2.5L	97-00	074752D	074753C	074804	074907LS	074907
KT	Rebuilding Kit - MILLENIA 2.5L	01-On	074752C	074753C	074804	074907ALS	074907A
KT	Rebuilding Kit - MPV	00-On	074752D	074753C	074804	074907LS	074907
KT	Rebuilding Kit - PROTEGE 4WD	90-91	074752A	074753B	074802	074903LS	074905
KT	Rebuilding Kit - CAPRI	91-94	074752A	074753A	074802	074903LS	074903
KT	Rebuilding Kit - FORD PROBE 2.2L	89-92	074752A	074753A	074802	074903LS	074903
KT	Rebuilding Kit - FORD PROBE 3.0L & Turbo	89-92	074752A	074753B	074802	074903LS	074905
KT	Rebuilding Kit - FORD PROBE 2.0L	93	074752A	074753X	074802	074903LS	074903X
KT	Rebuilding Kit - FORD PROBE 2.5L	93-97	074752D	074753C	074804	074907LS	074907

MISCELLANEOUS GASKETS & KIT COMPONENTS

ILL	ALTO No.	REF No.	Description	Spec	Year	Qty	Notes
1F	074816	FU31-21-512	Gasket, Oil Pan - Non Turbo	Cork/Rub	86-On	1	
1F	074816A	FU32-21-512	Gasket, Oil Pan - Turbo	Cork/Rub	88-92	1	
2F	074818	BN97-21-531	Gasket, VB (side) Cover - Non Turbo	Cork/Rub	86-On	1	
2F	074818A	FU32-21-531	Gasket, VB (side) Cover - Turbo	Cork/Rub	88-92	1	

FRICTION CLUTCHES

ILL	ALTO No.	REF No.	Description	Spec	Year	Qty	Notes
3C	074700	FU9A-19-580	Forward	.063/1.6	86-On	3-4	HEG - 48T - OD: 5.711" - PL
4C	074712	FU01-19-590	Coast - "V" tooth	.061/1.55	86-87	2	Tan - 44T - OD: 5.162" - PL
4C	074702	FU50-19-590	Coast - Square tooth	.061/1.55	88-On	2	HEG - 44T - OD: 5.162" - PL
5C	074714	FU01-19-460	Reverse - "V" tooth	.063/1.6	86-87	2	Tan - 58T - OD: 7.718" - PL
5C	074704	FU50-19-4F0	Reverse - Square tooth	.063/1.6	88-00	2	HEG - 58T - OD: 7.718" - PL
5C	074704A156	GF30-19-5J0	Reverse	.063/1.6	01-On	2	HEG - 32T - OD:7.718 - PLNI
6B	074714	FU01-19-460	Low - "V" tooth	.063/1.6	86-87	2	Tan - 58T - OD: 7.718" - PL
6B	074704	FU50-19-4F0	Low - Square tooth	.063/1.6	88-On	2	HEG - 58T - OD: 7.718" - PL
7A	074708	FU9A-19-370	3/4 (Overdrive)	.063/1.6	87-92	4-5	HEG - 50T - OD: 4.644" - PL
7A	074708SM	FU2G-19-370	3/4 (Overdrive)	.063-1.6	93-On	5	HEG - 50T - OD: 4.644" - SM

STEEL CLUTCHES

ILL	ALTO No.	REF No.	Description	Spec	Year	Qty	Notes
8C	074701	FU01-19-571	Forward	.063/1.6	86-92	3-4	8T - ID: 4.810"
8C	074711	FU9A-19-571A	Forward	.063/1.6	93-On	3	32T - ID: 4.810"
9C	074703	FU01-19-621A	Coast	.063/1.6	86-On	2-3	32T - ID: 4.416"
10C	074705	FU50-19-561A	Reverse	.063/1.6	86-92	2	12T - ID: 7.100"
10C	074705-180	NA	Reverse - selective	.071/1.8	86-92	AR	12T - ID: 7.100"
10C	074715	FU9A-19-561	Reverse	.063/1.6	93-On	2	30T - ID: 7.083"
12B	074707	FU01-19-451B	Low	.063/1.6	86-On	3-5	15T - ID: 7.126"
13A	074719	FU01-19-334	3/4 (Overdrive)	.063/1.6	86-87	5	16T - ID: 4.020"
13A	074709	FU50-19-334	3/4 (Overdrive) - 2.0 & 2.2L engines	.063/1.6	88-92	5	29T - ID: 4.020"
13A	074709A	FU32-19-334	3/4 (Overdrive)	.091/2.3	88-On	5	30T - ID: 4.020"
13A	074709-330	FU2G-19-334	3/4 (Overdrive) - 2.5L	.130/3.3	93-On	4	29T - ID: 4.020"

MAZDA

MAZDA - G4AEL, G4AHL, GF4AEL 1986-On
FORD - G4EAT, GF4EAT 1986-On

PRESSURE PLATES

ILL	ALTO No.	REF No.	Description	Spec	Year	Qty	Notes
14A	074762-380	FU50-19-362A	3/4 (Overdrive) - backing	.148/3.8	90-95	AR	
14A	074762-400	FU50-19-364A	3/4 (Overdrive) - backing	.156/4.0	90-95	AR	
14A	074762-420	FU50-19-365A	3/4 (Overdrive) - backing	.165/4.2	90-95	AR	
14A	074762-440	FU50-19-366A	3/4 (Overdrive) - backing	.172/4.4	90-95	AR	
14A	074762-460	FU50-19-367A	3/4 (Overdrive) - backing	.180/4.6	90-95	AR	
14A	074762-480	FU50-19-368A	3/4 (Overdrive) - backing	.188/4.8	90-95	AR	
14A	074762-500	NA	3/4 (Overdrive) - backing	.196/5.0	90-95	AR	
14A	074762-520	NA	3/4 (Overdrive) - backing	.204/5.2	90-95	AR	
N I	074764A660	E92Z-7B066N	Reverse	.260/6.6	86-92	AR	
N I	074764A700	E92Z-7B066P	Reverse	.276/7.0	86-92	AR	
N I	074764A720	E92Z-7B066Q	Reverse	283/7.2	86-92	AR	

OEI® Original Equipment Improvements

ILL	ALTO No.	REF No.	Description	Spec	Year	Qty	Notes
KT	074985	SK® G4A	Shift Kit®	Transgo®	86-92	1	
KT	074985A	SK® GF4EL	Shift Kit®	Transgo®	93-On	1	

BANDS

ILL	ALTO No.	REF No.	Description	Spec	Year	Qty	Notes
15B	074950	FU08-21-310B	Brake - Non Turbo (1.500")	Tan	86-92	1	
15B	074951	FU32-21-310C	Brake - Turbo (1.750")	Tan	88-On	1	

FILTERS

ILL	ALTO No.	REF No.	Description	Spec	Year	Qty	Notes
16F	074940	FU01-21-500E	Filter - 4 bolts	.625	86-87	1	
16F	074942	FU31-21-500	Filter - 3 bolts	1.000	88-92	1	
16F	074942A	FU3A-21-500	Filter - 3 bolts short pickup	1.250	88-92	1	
16F	074942B	F0JY-7A098A	Filter - 3 bolts 1-1/2" Pickup	1.500	89-90	1	
16F	074944	FU9A-21-500	Filter - Plastic & Metal with pickup tube		93-On	1	

METAL CLAD SEALS

ILL	ALTO No.	REF No.	Description	Spec	Year	Qty	Notes
17D	074400	FU01-19-241A	Front Pump	Poly	86-On	1	
17D	074400A	NA	Front Pump	Vamac®	86-On	1	
18D	063401	F003-27-238A	Axle		86-On	2	
N I	063402	99586-08166	Speedometer		90-99	1	

SEALING RINGS

ILL	ALTO No.	REF No.	Description	Spec	Year	Qty	Notes
KT	074600	G702A	Sealing Ring Kit - 10T		86-On	1	without Accum. rings
KT	074601	G702X	Sealing Ring Kit - 25T		86-On	1	Includes Accum. rings
KT	074602	NA	O Ring Kit - Accumulator rings		86-On	1	Aftermarket
KT	074602A	NA	D Ring Kit - Accumulator rings		86-On	1	Aftermarket
19F	074100	FU01-19-701A	Stator Shaft (Pump)	Teflon	86-On	4	
19F	074100A	NA	Stator Shaft (Pump)	SSP	86-On	opt.	
20E	074101	FU01-19-212B	Output Gear	Teflon	86-On	2	
20E	074101A	NA	Output Gear	Metal	86-On	opt.	
21C	074102	FU01-19-603A	Forward Clutch - inner	Teflon	86-On	2	

MAZDA

MAZDA - G4AEL, G4AHL, GF4AEL 1986-On
FORD - G4EAT, GF4EAT 1986-On

BUSHINGS

ILL	ALTO No.	REF No.	Description	Spec	Year	Qty	Notes
KT	074625	NA	Kit		86-On	1	

MAZDA

MAZDA - FN4AEL 1999-On
FORD - 4F27E 1999-On

KITS

*Add Suffix SK for Super Kit

ILL	Description	Years	Friction Module	Steel Module	Overhaul Kit	Banner Kit	Master Kit
KT	Rebuilding Kit - Mazda Protege with Molded Pistons	99-04	133752	133753A	133800	133901LS	133901
KT	Rebuilding Kit - Mazda Protege without Molded Pistons	99-04	133752	133753A	133800X	133901XLS	133901X
KT	Rebuilding Kit - Mazda 6 2.3L with Molded Pistons (10/02 to 03)	02-03	133752B	133753C	133800	133901ALS	133901A
KT	Rebuilding Kit - Mazda 6 2.3L without Molded Pistons (10/02 to 03)	02-03	133752B	133753C	133800X	133901AXLS	133901AX
KT	Rebuilding Kit - Mazda 3 with Molded Pistons	04-05	133752B	133753C	133800	133901ALS	133901A
KT	Rebuilding Kit - Mazda 3 without Molded Pistons	04-05	133752B	133753C	133800X	133901AXLS	133901AX
KT	Rebuilding Kit - Ford with Molded Pistons	00-08	133752	133753A	133802	133903LS	133903
KT	Rebuilding Kit - Ford without Molded Pistons	00-08	133752	133753A	133802X	133903XLS	133903X

KITS - HI-PERFORMANCE Red Eagle®

ILL	Description	Years	Friction Module	Steel Module	Overhaul Kit	Banner Kit	Master Kit
KT	Rebuilding Kit - Ford without Molded Pistons	00-08	133752HP	133753AHP	133802X	133903HPLS	133903HP

KITS - HI-PERFORMANCE Red Eagle® with PowerPack®

ILL	Description	Years	Friction and Steel Module	Overhaul Kit	Banner Kit	Master Kit
KT	Rebuilding Kit - Ford with PowerPack® without Molded Pistons	00-08	133750AHPPWR	133802X	NA	133903HPPWR

MISCELLANEOUS GASKETS & KIT COMPONENTS

ILL	ALTO No.	REF No.	Description	Spec	Year	Qty	Notes
N I	133816	NA	Gasket, Oil Pan	Cork/Rub	99-On	1	OE is RTV

FRICTION CLUTCHES

ILL	ALTO No.	REF No.	Description	Spec	Year	Qty	Notes
N I	133700-160	FN11-19-370	Forward	.063/1.6	99-On	4	HEG - 32T - OD: 4.527" - PL
N I	133704-160	FN01-19-5JX	Reverse	.063/1.6	99-On	2	HEG - 32T - OD: 5.515" - PL
N I	133700-160	FN11-19-370	3rd & 4th (Direct)	.063/1.6	99-On	3	HEG - 32T - OD: 4.527" - PL
N I	133700A250	FNE1-19-370	3rd & 4th (Direct) - internal spline (Mazda only)	.099/2.5	03-On	3	HEG - 32T - OD: 4.527" - PLNI
N I	133701A250	FNE1-19-33Y	3rd & 4th (Direct) - external spline (Mazda only)	.099/2.5	03-On	3	HEG - 32T - ID: 3.715" - PLNI
N I	133706-160	FN01-19-4FX	Low / Reverse	.063/1.6	99-On	5	HEG - 42T - OD: 6.079" - PL

FRICTION CLUTCHES - HI-PERFORMANCE - Red Eagle®

ILL	ALTO No.	REF No.	Description	Spec	Year	Qty	Notes
N I	133740-160	NA	Forward / Direct	.063/1.6	99-On	7	Red - 32T - OD: 4.527" - PL
N I	133744-160	NA	Reverse	.063/1.6	99-On	2	Red - 32T - OD: 5.515" - PL
N I	133746-160	NA	Low / Reverse	.063/1.6	99-On	5	Red - 42T - OD: 6.079" - PL

STEEL CLUTCHES

ILL	ALTO No.	REF No.	Description	Spec	Year	Qty	Notes
N I	133701-160	FN11-19-61X	Forward	.063/1.6	99-On	4	32T - ID: 3.715"
N I	133705-160	XSFZ-7B442AB	Reverse	.063/1.6	99-On	2	36T - ID: 5.022"
N I	133701-345	XS4Z-7B442DB	3rd & 4th (Direct)	.136/3.45	99-On	3	32T - ID: 3.715"
N I	133707-160	XS4Z-7B442BB	Low / Reverse	.063/1.6	99-On	5	12T - ID: 5.621"

MAZDA

MAZDA - FN4AEL 1999-On
FORD - 4F27E 1999-On

STEEL CLUTCHES - HI-PERFORMANCE - Kolene®

ILL	ALTO No.	REF No.	Description	Spec	Year	Qty	Notes
N I	133701K160	NA	Forward / Direct	.063/1.6	99-On	7	Kolene®
N I	133705K160	NA	Reverse	.063/1.6	99-On	2	Kolene®
N I	133701K345	NA	3rd & 4th (Direct)	.136/3.45	00-On	3	Kolene®
N I	133707K160	NA	Low / Reverse	.063/1.6	99-On	5	Kolene®

PRESSURE PLATES

ILL	ALTO No.	REF No.	Description	Spec	Year	Qty	Notes
N I	133760-390	FN11-19-362A	Forward - backing	.153/3.9	99-On	1	
N I	133762-580	FN11-19-5K2	Reverse - backing	.228/5.8	99-On	1	
N I	133760-390	FN11-19-362A	3rd & 4th (Direct) - backing	.153/3.9	99-On	1	
N I	TBA	FN11-19-453	Low / Reverse - backing		99-On	1	

OEI® Original Equipment Improvements

ILL	ALTO No.	REF No.	Description	Spec	Year	Qty	Notes
N I	133757	NL	Direct PowerPack® - HI-PERFORMANCE		99-On	1	Red Eagle®

BANDS

ILL	ALTO No.	REF No.	Description	Spec	Year	Qty	Notes
N I	133950	FN01-21-310A	Brake	Tan	99-On	1	

BANDS - HI-PERFORMANCE - Red Eagle® or Carbonite®

ILL	ALTO No.	REF No.	Description	Spec	Year	Qty	Notes
N I	133960	NL	Brake	Red	99-On	1	Red Eagle®

FILTERS

ILL	ALTO No.	REF No.	Description	Spec	Year	Qty	Notes
N I	133940	FN01-21-500	Filter		99-On	1	

METAL CLAD SEALS

ILL	ALTO No.	REF No.	Description	Spec	Year	Qty	Notes
N I	TBA	FN11-19-241	Front Pump		99-On	1	
N I	063401	F003-27-238A	Axle		99-On	2	
N I	063402	99586-08166	Speedometer		99-On	1	

SEALING RINGS

ILL	ALTO No.	REF No.	Description	Spec	Year	Qty	Notes
KT	133600	NA	Sealing Ring Kit		99-On	1	

MOLDED PISTONS

ILL	ALTO No.	REF No.	Description	Spec	Year	Qty	Notes
KT	133671	NA	Piston Kit - FN4AEL Mazda		99-04	1	contains 6 pistons
KT	133670	NA	Piston Kit - 4F27E Ford		00-05	1	contains 6 pistons
N I	133300	NA	Piston- Reverse- Ford		00-05	1	
N I	133300A	NA	Piston- Reverse- Mazda		99-04	1	
N I	133301	NA	Piston- Low/Reverse- Ford/Mazda		99-05	1	
N I	133302	NA	Piston- Direct- Ford/Mazda		99-05	1	
N I	133303	NA	Piston- Direct, Balance- Ford/Mazda		99-05	1	
N I	133304	NA	Piston- Foward- Ford/Mazda		99-05	1	
N I	133305	NA	Piston- Foward, Balance- Ford/Mazda		99-05	1	

MAZDA

MAZDA - FN4AEL 1999-On

FORD - 4F27E 1999-On

HARD PARTS

ILL	ALTO No.	REF No.	Description	Spec	Year	Qty	Notes
KT	133350	NA	Rear Cover Assembly		00-05	1	

MAZDA

MAZDA - FS5A-EL 2006-On
FORD - FNR5 2006-On

KITS

*Add Suffix SK for Super Kit

ILL	Description	Years	Friction Module	Steel Module	Overhaul Kit	Banner Kit	Master Kit
KT	Rebuilding Kit - Mazda FS5A-EL, Ford FNR5 Combo Duraprene with Molded Pistons	06-On	133752A	133753B	133808	133909LS	133909
KT	Rebuilding Kit - Mazda FS5A-EL, Ford FNR5 Combo Duraprene without Molded Pistons	06-On	133752A	133753B	133808X	133909XLS	133909X

FRICTION CLUTCHES

ILL	ALTO No.	REF No.	Description	Spec	Year	Qty	Notes
N I	133700-160	FN11-19-370	Forward	.063/1.6	06-On	4	HEG - 32T - OD: 4.527" - PL
N I	133700A250	FNE1-19-370	3rd & 4th (Direct) - internal spline	.099/2.5	06-On	3	HEG - 32T - OD: 4.527" - PLNI
N I	133701A250	FNE1-19-33Y	3rd & 4th (Direct) - external spline	.099/2.5	06-On	3	HEG - 32T - ID: 3.715" - PLNI
N I	133704-160	FN01-19-5JX	Reverse	.063/1.6	06-On	2	HEG - 32T - OD: 5.515" - PL
N I	133706-160	FN01-19-4FX	Low / Reverse	.063/1.6	06-On	5	HEG - 42T - OD: 6.079" - PL
N I	133700-180	FN11-19-370	Overdrive Direct	.070/1.78	06-On	2	HEG - 32T - OD: 4.527" - PL
N I	133708-180	NA	Overdrive Brake	.070/1.78	06-On	3	HEG - 32T - OD: 4.520 - SB

STEEL CLUTCHES

ILL	ALTO No.	REF No.	Description	Spec	Year	Qty	Notes
N I	133701-160	FN11-19-61X	Forward	.063/1.6	06-On	4	32T - ID: 3.715"
N I	133705-160	XSFZ-7B442AB	Reverse	.063/1.6	06-On	2	36T - ID: 5.022"
N I	TBA	NA	Reverse	.083/2.11	06-On	1	36T - ID: 5.022" - dish
N I	133707-160	XS4Z-7B442BB	Low / Reverse	.063/1.6	06-On	5	12T - ID: 5.621"
N I	133701-160	FN11-19-61X	Overdrive Direct	.063/1.6	06-On	3	32T - ID: 3.715"
N I	133709-157	FS50-19-HG1	Overdrive Brake	.062/1.57	06-On	5	30T - ID: 3.860"

BANDS

ILL	ALTO No.	REF No.	Description	Spec	Year	Qty	Notes
N I	133950	FN01-21-310A	Brake	Tan	06-On	1	

FILTERS

ILL	ALTO No.	REF No.	Description	Spec	Year	Qty	Notes
N I	133940A	6E5Z-7B155A	Filter - longer tube		06-On	1	

MOLDED PISTONS

ILL	ALTO No.	REF No.	Description	Spec	Year	Qty	Notes
N I	133672	NA	Piston Kit		06-On	1	9 Pistons

MAZDA
FW6A-EL
2012-On

KITS

*Add Suffix SK for Super Kit

ILL	Description	Years	Friction Module	Steel Module	Overhaul Kit	Banner Kit	Master Kit
KT	Rebuilding Kit with Pistons	12-On	225752	225753	225800	225901LS	225901
KT	Rebuilding Kit without Pistons	12-On	225752	225753	225800X	225901XLS	225901X

FRICTION CLUTCHES

ILL	ALTO No.	REF No.	Description	Spec	Year	Qty	Notes
2C	225700-157	NA	1-3-5-7	.062/1.57	12-On	5	CRB - 40T - OD: 6.267"
2C	225702-152	NA	Low	.060/1.52	12-On	5	CRB - 28T - OD: 4.600"
2C	225704-157	NA	2-6		12-On	4	
2C	225706-168	NA	3-5-Reverse	.066/1.68	12-On	3	CRB - 40T - OD: 6.664"
2C	225708-160	NA	Low/Reverse	.063/1.60	12-On	4	CRB - 40T - OD: 6.664"

STEEL CLUTCHES

ILL	ALTO No.	REF No.	Description	Spec	Year	Qty	Notes
2C	225701-200	NA	1-3-5-7	.079/2.01	12-On	5	40T - ID: 5.5505"
2C	225703-200	NA	Low	.079/2.01	12-On	5	32T - ID: 3.760"
2C	225705-163	NA	2-6	.064/1.63	12-On	3	26T - ID: 5.829"
2C	225707-160	NA	3-5-Reverse	.063/1.60	12-On	3	24T - ID: 5.829"
2C	225709-160	NA	Low/Reverse	.063/1.60	12-On	4	28T - ID: 5.829"

PISTONS

ILL	ALTO No.	REF No.	Description	Spec	Year	Qty	Notes
2C	225670	NA	Piston Kit		12-On	1	

MAZDA
LJ4AEL
1995-On

A>

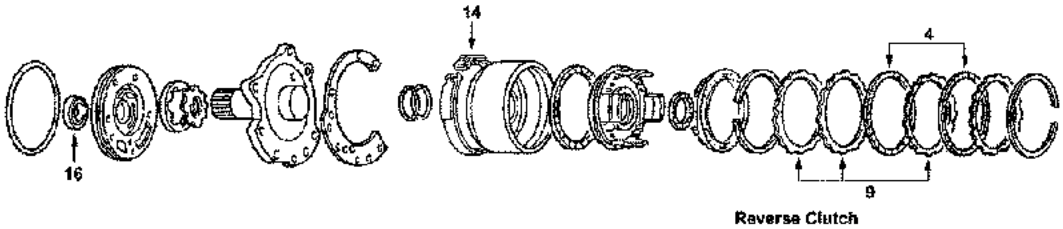

B>

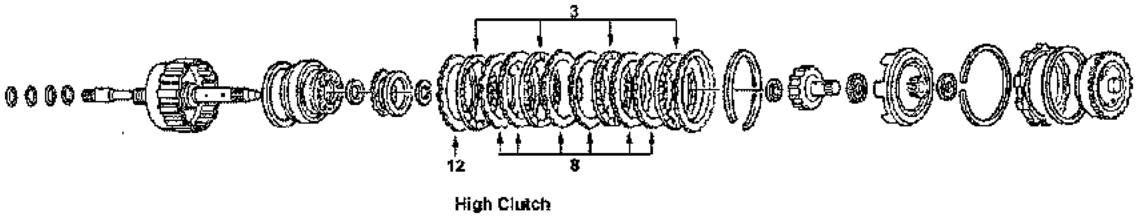

C>

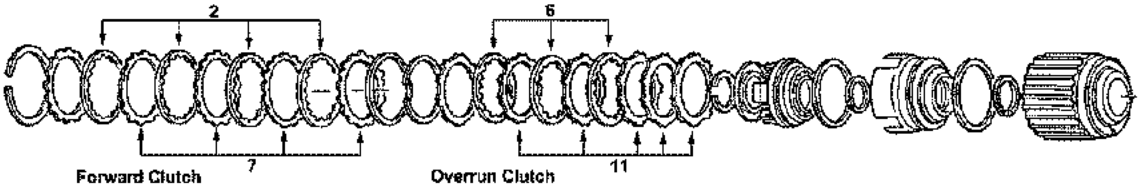

D>

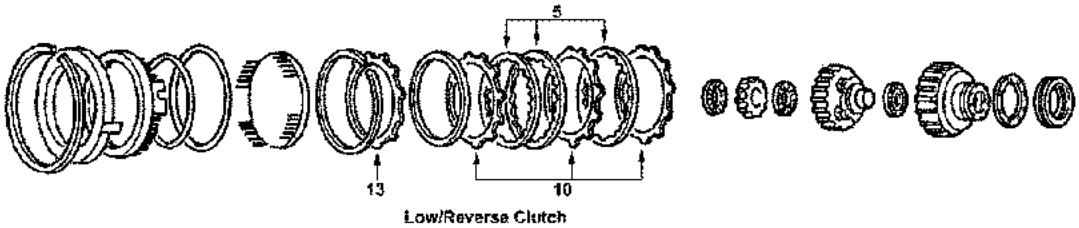

E>

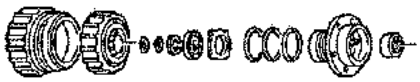

F>

G>

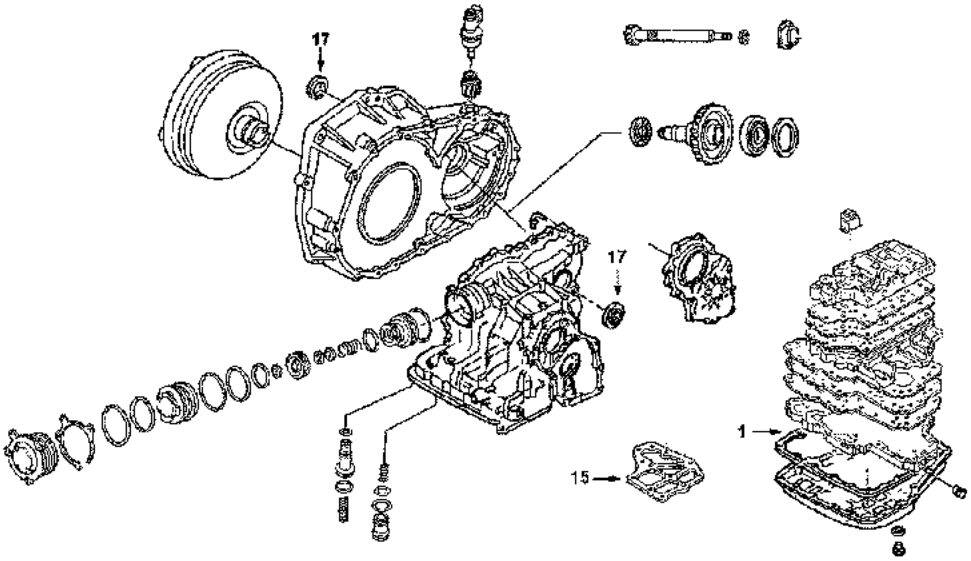

MAZDA
LJ4AEL
1995-On

KITS

*Add Suffix SK for Super Kit

ILL	Description	Years	Friction Module	Steel Module	Overhaul Kit	Banner Kit	Master Kit
KT	Rebuilding Kit	95-On	105752B	105753B	105800	105905LS	105905

MISCELLANEOUS GASKETS & KIT COMPONENTS

ILL	ALTO No.	REF No.	Description	Spec	Year	Qty	Notes
1G	105816A	NA	Gasket, Oil Pan	Cork/Rub	95-On	1	OE is RTV

FRICTION CLUTCHES

ILL	ALTO No.	REF No.	Description	Spec	Year	Qty	Notes
2C	105700-140	FX01-19-590A	Forward	.055/1.4	95-On	6	HEG - 32T - OD: 5.424" - PL
3B	105702	FX01-19-5J0	High	.063/1.6	M95	4	HEG - 21T - OD: 4.416" - PL
3B	105702B	FX02-19-5J0	High	.063/1.6	M95-On	4	HEG - 24T - OD: 4.416" - PL
4A	105704	FX01-19-620	Reverse	.063/1.6	95-On	2	HEG - 28T - OD: 5.480" - PL
5D	105706	FX01-19-610	Low / Reverse	.063/1.6	95-On	7	HEG - 32T - OD: 6.455" - PL
6C	105708	FX01-19-4F0	Overrun	.063/1.6	95-On	3	HEG - 20T - OD: 4.940" - PL

STEEL CLUTCHES

ILL	ALTO No.	REF No.	Description	Spec	Year	Qty	Notes
7C	105701-140	FX01-19-561A	Forward	.055/1.4	95-On	6	32T - ID: 4.928"
8B	105703-140	FX01-19-334	High	.055/1.4	95-On	6	28T - ID: 3.610"
9A	105705	FX01-19-571	Reverse	.071/1.8	95-On	3	30T - ID: 4.957"
10D	105707	FX01-19-609	Low / Reverse	.071/1.8	95-On	7	10T - ID: 5.905"
11C	105709	FX01-19-587	Overrun	.063/1.6	95-On	5	8T - ID: 4.447"

PRESSURE PLATES

ILL	ALTO No.	REF No.	Description	Spec	Year	Qty	Notes
12B	105703-200	FX01-19-499	High - backing	.078/2.0	95-On	AR	
12B	105703-258	FX01-19-499A	High - backing	.101/2.58	95-On	AR	
13D	105707-200	FX01-19-613	Low / Reverse - apply	.078/2.0	95-On	AR	
13D	105707-220	FX01-19-615	Low / Reverse - apply	.086/2.2	95-On	AR	
13D	105707-240	FX01-19-616	Low / Reverse - apply	.095/2.4	95-On	AR	
13D	105707-260	FX01-19-617	Low / Reverse - apply	.102/2.6	95-On	AR	
13D	105707-280	FX01-19-618	Low / Reverse - apply	.110/2.8	95-On	AR	
13D	105707-300	FX01-19-623	Low / Reverse - apply	.118/3.0	95-On	AR	
13D	105707-320	FX01-19-625	Low / Reverse - apply	.126/3.2	95-On	AR	
13D	105707-340	FX01-19-626	Low / Reverse - apply	.134/3.4	95-On	AR	

BANDS

ILL	ALTO No.	REF No.	Description	Spec	Year	Qty	Notes
14A	105950	FX01-19-360	Brake	Tan	95-On	1	

FILTERS

ILL	ALTO No.	REF No.	Description	Spec	Year	Qty	Notes
15G	105944	FX01-19-815	Filter		95-On	1	

METAL CLAD SEALS

ILL	ALTO No.	REF No.	Description	Spec	Year	Qty	Notes
16A	105400	FX01-19-241A	Front Pump		95-On	1	
17G	063401	F003-27-238A	Axle		95-On	2	

MAZDA

LJ4AEL

1995-On

SEALING RINGS

ILL	ALTO No.	REF No.	Description	Spec	Year	Qty	Notes
KT	105600	E512	Sealing Ring Kit - 2M / 10T		95-On	1	

MAZDA

N4AEL, N4AHL, NC4AEL

1986-97

A>

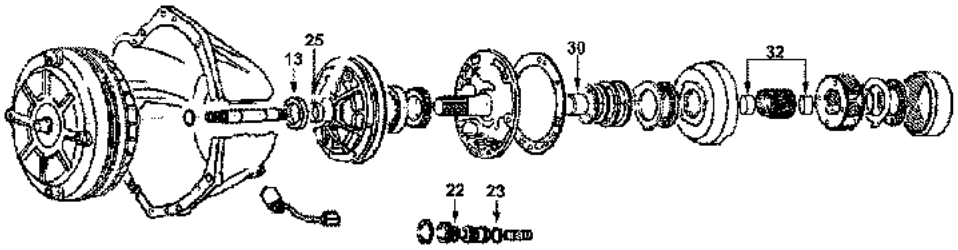

B>

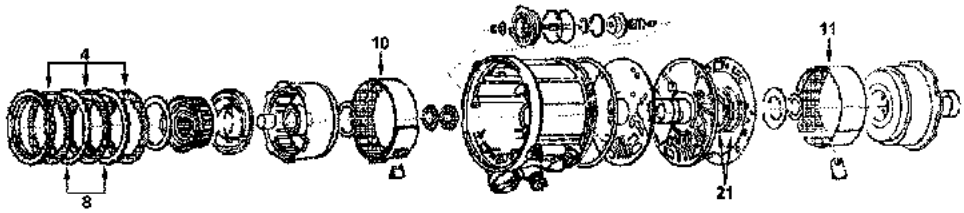

Overdrive Clutch

C>

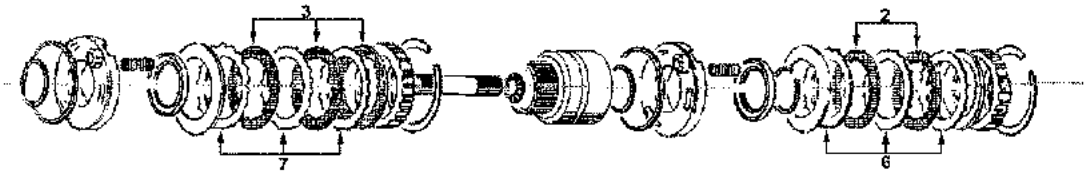

Direct Clutch

Forward Clutch

D>

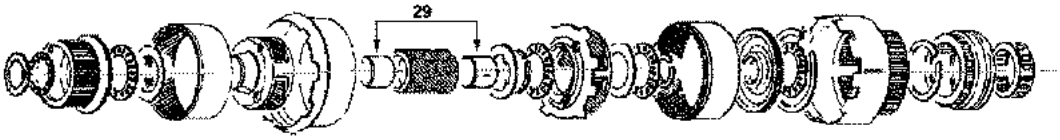

E>

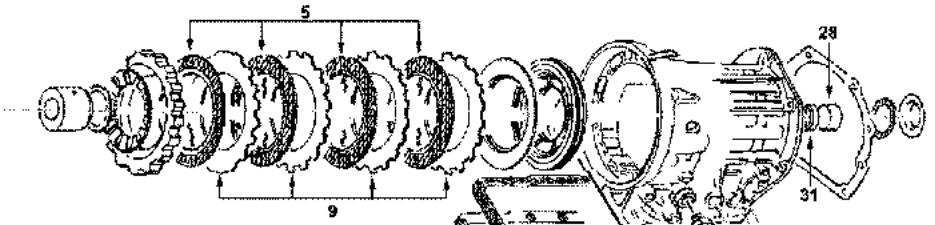

Low / Reverse Clutch

F>

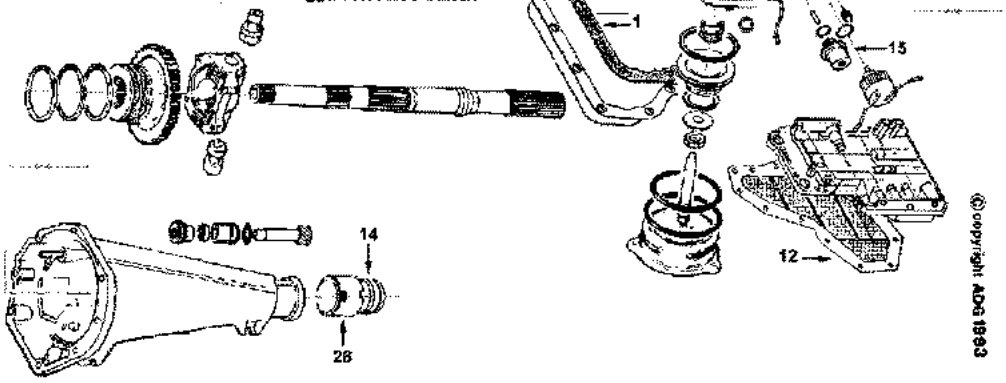

MAZDA
N4AEL, N4AHL, NC4AEL
1986-97

KITS — *Add Suffix SK for Super Kit

ILL	Description	Years	Friction Module	Steel Module	Overhaul Kit	Banner Kit	Master Kit
KT	Rebuilding Kit - 929 & RX7	86-92	063752A	063753A	063804	063903LS	063903
KT	Rebuilding Kit - MIATA, MPV, B2600	89-97	063752A	063753C	063804	063903LS	063903A

MISCELLANEOUS GASKETS & KIT COMPONENTS

ILL	ALTO No.	REF No.	Description	Spec	Year	Qty	Notes
1F	042816	BT28-19-836A	Gasket, Oil Pan	Cork/Rub	86-97	1	

FRICTION CLUTCHES

ILL	ALTO No.	REF No.	Description	Spec	Year	Qty	Notes
2C	042700	BU55-19-5J0	Forward	.061/1.55	86-97	5-7	Tan - 44T - OD: 4.530" - WF
3C	042700	BU55-19-5J0	Direct	.061/1.55	86-97	4-5	Tan - 44T - OD: 4.530" - WF
4B	042700	BU55-19-5J0	Overdrive	.061/1.55	86-97	2	Tan - 44T - OD: 4.530" - WF
5E	042702	BU17-19-610	Low / Reverse	.075/1.9	86-97	6	Tan - 51T - OD: 5.117" - WF

FRICTION CLUTCHES - HI-PERFORMANCE - Red Eagle®

ILL	ALTO No.	REF No.	Description	Spec	Year	Qty	Notes
AR	042740	NA	Forward, Direct, & Overdrive	.061/1.55	86-97	AR	Red - 44T - OD: 4.530" - SM

STEEL CLUTCHES

ILL	ALTO No.	REF No.	Description	Spec	Year	Qty	Notes
6C	063701	FT01-19-499	Forward - except MPV & Truck	.063/1.6	86-97	5-6	28T - ID: 3.625"
6C	042701	BU55-19-499	Forward - MPV & Truck	.078/2.0	89-94	5	28T - ID: 3.625"
7C	063701	FT01-19-499	Direct - 929 & RX7	.063/1.6	86-90	2-5	28T - ID: 3.625"
7C	063701-250	BV01-19-499	Direct - 929 & RX7	.098/2.5	91-92	3	28T - ID: 3.625"
7C	042701	BU55-19-499	Direct- Miata, MPV & Truck	.078/2.0	86-97	4-5	28T - ID: 3.625"
AR	042701A	NA	Forward & Direct - selective	.032/.8	86-97	AR	28T - ID: 3.625"
8B	063701	FT01-19-499	Overdrive - except MPV & Truck	.063/1.6	86-97	2	28T - ID: 3.625"
8B	042701	BU55-19-499	Overdrive - MPV & Truck	.078/2.0	89-94	2	28T - ID: 3.625"
9E	042703	0338-19-609	Low & Reverse	.078/2.0	86-97	6	13T - ID: 4.212"

OEI® Original Equipment Improvements

ILL	ALTO No.	REF No.	Description	Spec	Year	Qty	Notes
KT	063985	SK® N4AEL	Shift Kit®	Transgo®	86-97	1	

BANDS

ILL	ALTO No.	REF No.	Description	Spec	Year	Qty	Notes
10B	042951	31630-X0103	Overdrive Brake	Tan	86-97	1	
11B	042951	31630-X0103	Intermediate Brake	Tan	86-97	1	

FILTERS (add Prefix FK for FILTER KIT)

ILL	ALTO No.	REF No.	Description	Spec	Year	Qty	Notes
12F	042946	BV01-19-815	Filter		86-97	1	

METAL CLAD SEALS

ILL	ALTO No.	REF No.	Description	Spec	Year	Qty	Notes
13A	042400	0338-19-223A	Front Pump		86-97	1	
14F	TBA	M502-17-335A	Extension Housing without Boot	2.020	86-97	1	
14F	TBA	R501-17-335A	Extension Housing with Boot	2.020	86-97	1	
14F	TBA	M507-17-335A	Extension Housing - Miata	1.900	90-97	1	

MAZDA

N4AEL, N4AHL, NC4AEL

1986-97

METAL CLAD SEALS

ILL	ALTO No.	REF No.	Description	Spec	Year	Qty	Notes
14F	TBA	M504-17-335	Adapter Housing - 4wd	2.575	86-94	1	
N I	063402	99586-08166	Speedometer		86-97	1	

SEALING RINGS

ILL	ALTO No.	REF No.	Description	Spec	Year	Qty	Notes
KT	042604	E501B	Sealing Ring Kit - 2R / 9T		86-97	1	

BUSHINGS

ILL	ALTO No.	REF No.	Description	Spec	Year	Qty	Notes
KT	042626	NA	Kit		86-97	1	

MODULATORS

ILL	ALTO No.	REF No.	Description	Spec	Year	Qty	Notes
15F	042500	BT07-19-823	Modulator		86-97	1	

MAZDA

R4AEL, RA4AEL, RB4AEL

1988-99

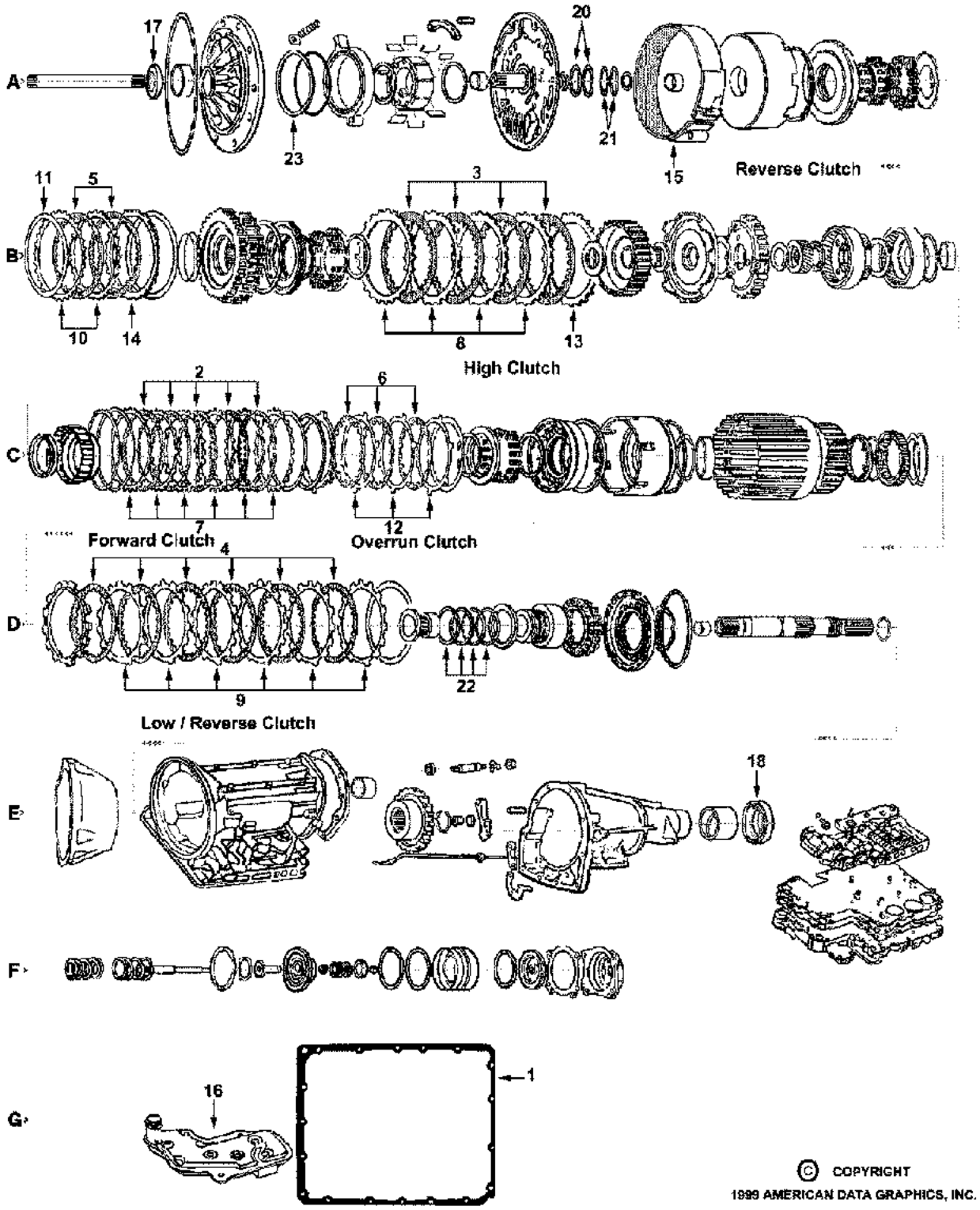

MAZDA

R4AEL, RA4AEL, RB4AEL

1988-99

KITS

*Add Suffix SK for Super Kit

ILL	Description	Years	Friction Module	Steel Module	Overhaul Kit	Banner Kit	Master Kit
KT	Rebuilding Kit	88-94	075752D	075753D	075806	075901BLS	075901B
KT	Rebuilding Kit	94-99	075752P	075753R	075806	075901FLS	075901F

MISCELLANEOUS GASKETS & KIT COMPONENTS

ILL	ALTO No.	REF No.	Description	Spec	Year	Qty	Notes
1G	075816	BV60-19-835	Gasket, Oil Pan	Cork/Rub	88-On	1	

FRICTION CLUTCHES

ILL	ALTO No.	REF No.	Description	Spec	Year	Qty	Notes
2C	075700	BV11-19-5J0	Forward	.078/2.0	88-93	5	Tan - 36T - OD: 5.845" - PL
2C	075700A	BV56-19-5J0	Forward	.063/1.6	94-99	6	HEG - 36T - OD: 5.845" - PL
3B	075702	BV11-19-590	High	.063/1.6	88-99	4-5	HEG - 30T - OD: 5.233" - PL
4D	075704	BV71-19-590	Low / Reverse	.078/2.0	88-99	6-7	HEG - 30T - OD: 5.805" - PL
5B	075706	BV11-19-690	Reverse - narrow	.078/2.0	88-90	2	Tan - 34T - OD: 5.880" - PL
5B	075706A	BV11-19-620	Reverse - wide	.078/2.0	91-99	2	HEG - 30T - OD: 5.880" - PL
5B	075706-190	NA	DrumSaver® Comp. - Reverse narrow	.075/1.9	88-90	AR	Tan - 34T - OD: 5.880" - PL
5B	075706A190	NA	DrumSaver® Comp. - Reverse wide	.075/1.9	91-99	AR	HEG - 30T - OD: 5.880" - PL
6C	075708	BV11-19-587	Overrun	.078/2.0	88-99	3	HEG - 18T - OD: 5.259" - PL

STEEL CLUTCHES

ILL	ALTO No.	REF No.	Description	Spec	Year	Qty	Notes
7C	075701	BV45-19-499	Forward	.078/2.0	88-93	5	24T - ID: 5.355"
7C	075701A	BV56-19-499	Forward	.071/1.8	94-99	5-6	24T - ID: 5.355"
8B	075703	BV11-19-451	High - except 929	.067/1.7	88-99	7	27T - ID: 4.414"
8B	075703K170	NA	High - except 929 - KOLENE®	.067/1.7	88-99	opt.	27T - ID: 4.414"
8B	075713	BV58-19-5D0	High - 929	.078/2.0	94-95	5	27T - ID: 4.414"
8B	075713K200	NA	High - 929 - Kolene®	.078/2.0	94-95	5	27T - ID: 4.414"
8B	075703K152	NA	High - Kolene® PowerPack® Component	.060/1.52	88-99	AR	27T - ID: 4.414"
8B	075723	31536-AA040	High - selective	.108/2.7	88-99	AR	27T - ID: 4.414"
8B	075743	31536-21X04	High - selective	.095/2.4	88-99	AR	27T - ID: 4.414"
9D	075705	BV45-19-609A	Low / Reverse	.078/2.0	88-99	6-7	14T - ID: 5.086"
9D	075705-130	NA	Low / Reverse - selective	.051/1.3	88-99	AR	14T - ID: 5.086"
9D	075705-160	NA	Low / Reverse - selective	.063/1.6	88-99	AR	14T - ID: 5.086"
9D	075705-180	NA	Low / Reverse - selective	.071/1.8	88-99	AR	14T - ID: 5.086"
9D	075705-225	NA	Low / Reverse - selective	.089/2.25	88-99	AR	14T - ID: 5.086"
10B	075707	BV45-19-561	Reverse - narrow	.078/2.0	88-90	2	30T - ID: 5.356"
10B	075707A	BV45-19-561A	Reverse - wide	.078/2.0	91-99	2	30T - ID: 5.084"
12C	075709	BV11-19-499	Overrun	.078/2.0	88-99	3-5	6T - ID: 4.701"
12C	075709-225	NA	Overrun - selective	.089/2.25	88-99	AR	6T - ID: 4.701"

PRESSURE PLATES

ILL	ALTO No.	REF No.	Description	Spec	Year	Qty	Notes
13B	075733	BV11-19-368	High - backing	.118/3.0	88-99	AR	
13B	075760-320	BV11-19-369	High - backing	.126/3.2	88-99	AR	
13B	075760-340	BV11-19-371	High - backing	.134/3.4	88-99	AR	
13B	075760-360	BV11-19-362	High - backing	.142/3.6	88-99	AR	
13B	075760-380	BV11-19-364	High - backing	.150/3.8	88-99	AR	
13B	075760-400	BV11-19-365	High - backing	.157/4.0	88-99	AR	
13B	075760-420	BV11-19-366	High - backing	.165/4.2	88-99	AR	
13B	075760-440	BV11-19-367	High - backing	.173/4.4	88-99	AR	

MAZDA

R4AEL, RA4AEL, RB4AEL

1988-99

PRESSURE PLATES

ILL	ALTO No.	REF No.	Description	Spec	Year	Qty	Notes
13B	075760-460	NA	High - backing	.181/4.6	88-99	AR	
13B	075760-480	NA	High - backing	.189/4.8	88-99	AR	
13B	075760-500	NA	High - backing	.197/5.0	88-99	AR	
14B	TBA	BV71-19-454	Reverse - backing	.189/4.8	88-99	AR	
14B	TBA	BV71-19-456	Reverse - backing	.197/5.0	88-99	AR	
14B	TBA	BV71-19-458	Reverse - backing	.209/5.3	88-99	AR	
14B	TBA	BV71-19-459	Reverse - backing	.220/5.6	88-99	AR	

OEI® Original Equipment Improvements

ILL	ALTO No.	REF No.	Description	Spec	Year	Qty	Notes
KT	075758	NA	DrumSaver® Kit - Reverse Drum		88-90	1	34T Friction
KT	075758A	NA	DrumSaver® Kit- Reverse Drum		91-99	1	30T Friction
KT	075985	SK® RE4R01A	Shift Kit®	Transgo®	88-On	1	

OEI® Original Equipment Improvements - HI-PERFORMANCE

ILL	ALTO No.	REF No.	Description	Spec	Year	Qty	Notes
KT	075757HP	NA	DrumSaver® - High Drum		88-99	1	

BANDS

ILL	ALTO No.	REF No.	Description	Spec	Year	Qty	Notes
15A	075950	BV35-19-360	Brake - Heavy Duty Wide Carbonite®	Crb	88-On	1	Carbonite®

FILTERS

ILL	ALTO No.	REF No.	Description	Spec	Year	Qty	Notes
16G	075942A	BV11-19-815	Filter - MPV (1/4" tube)		88-99	1	F325
16G	106940	BV50-19-815	Filter - B2600 truck		90-93	1	F247
16G	075942A	BV11-19-815	Filter - 929 (1/4" tube)		92-95	1	F325
16G	075942A	BV11-19-815	Filter - RX7 (1/4" tube)		92-93	1	F-325
16G	075944	BV65-19-815	Filter - RX7		94-95	1	F295

METAL CLAD SEALS

ILL	ALTO No.	REF No.	Description	Spec	Year	Qty	Notes
17A	068400	BV45-19-241	Front Pump		88-99	1	
18E	TBA	R501-17-335A	Extension Housing - MPV 2wd & 929	51mm	88-99	1	
18E	TBA	BV65-19-437	Extension Housing - RX7	58mm	92-95	1	
18E	TBA	M504-17-335	Adapter Housing - all 4wd	65mm	88-99	1	
N I	063402	99586-08166	Speedometer		88-99	1	
N I	TBA	NA	Manual Lever		88-99	1	

SEALING RINGS

ILL	ALTO No.	REF No.	Description	Spec	Year	Qty	Notes
KT	075600		Sealing Ring Kit - 1M / 8T		88-99	1	without Gov. rings
KT	075600A	E504A	Sealing Ring Kit - 1M / 11T		88-99	1	with Gov. rings

BUSHINGS

ILL	ALTO No.	REF No.	Description	Spec	Year	Qty	Notes
KT	075625	NA	Bushing Kit		88-99	1	

MAZDA

MAZDA RC4AEL, ISUZU JR405E
2004-On

KITS

*Add Suffix SK for Super Kit

ILL	Description	Years	Friction Module	Steel Module	Overhaul Kit	Banner Kit	Master Kit
KT	Rebuilding Kit - Mazda RC4AEL with Molded Pistons	04-On	039752	039753	039800A	039901LS	039901
KT	Rebuilding Kit - Mazda RC4AEL without Molded Pistons	04-On	039752	039753	039800	039901XLS	039901X
KT	Rebuilding Kit - Isuzu JR405E with Molded Pistons	04-On	039752	039753A	039800A	039901LS	039901A
KT	Rebuilding Kit - Isuzu JR405E without Molded Pistons	04-On	039752	039753A	039800	039901XLS	039901AX

FRICTION CLUTCHES

ILL	ALTO No.	REF No.	Description	Spec	Year	Qty	Notes
N I	075704-160	31662-AA060	Low / Reverse	.063/1.6	04-On	6	HEG - 30T - OD: 5.805" - PL
N I	162704-170	FP01-19-5J0	Low	.068/1.73	04-On	7	HEG - 30T - OD: 5.426" - PL
N I	135708-160	31532-AA131	2-4 Brake	.063/1.6	04-On	5	HEG - 30T - OD: 6.562" - SB
N I	039706-155	NA	Reverse	.061/1.55	04-On	2	HEG - 30T - OD: 5.594" - PLNI
N I	039708-155	NA	High	.062/1.57	04-On	6	HEG - 30T - OD: 5.090" - SB

STEEL CLUTCHES

ILL	ALTO No.	REF No.	Description	Spec	Year	Qty	Notes
N I	039701-200	NA	Low / Reverse	.079/1.98	04-On	4-6	20T - ID: 5.084"
N I	039703-200	NA	Low	.080/2.1	04-On	5-7	27T - ID: 4.839"
N I	039703A140	NA	Low - selective	.055/1.4	04-On	7	30T - ID: 4.839"
N I	039705-180	NA	2-4 Brake - RC4AEL	.071/1.81	04-On	8	15T - ID: 5.694"
N I	039705-358	NA	2-4 Brake - JR405E	.141/3.58	04-On	4	15T - ID: 5.694"
N I	039707-155	NA	Reverse	.063/1.58	04-On	2	32T - ID: 4.916"
N I	039709-200	NA	High - RC4AEL	.079/2.0	04-On	6	8T - ID: 4.121"
N I	039709-290	NA	High - JR405E	.114/2.9	04-On	4	8T - ID: 4.121"

FILTERS

ILL	ALTO No.	REF No.	Description	Spec	Year	Qty	Notes
N I	039940	897-331-0630	Filter		04-On	1	

MOLDED PISTONS

ILL	ALTO No.	REF No.	Description	Spec	Year	Qty	Notes
N I	039670	NA	Piston Kit (2)		04-On	1	

MERCEDES

722.0, 722.1, 722.2, (4 Bolt)
W3A040, W4B025, K4A40, K4C025

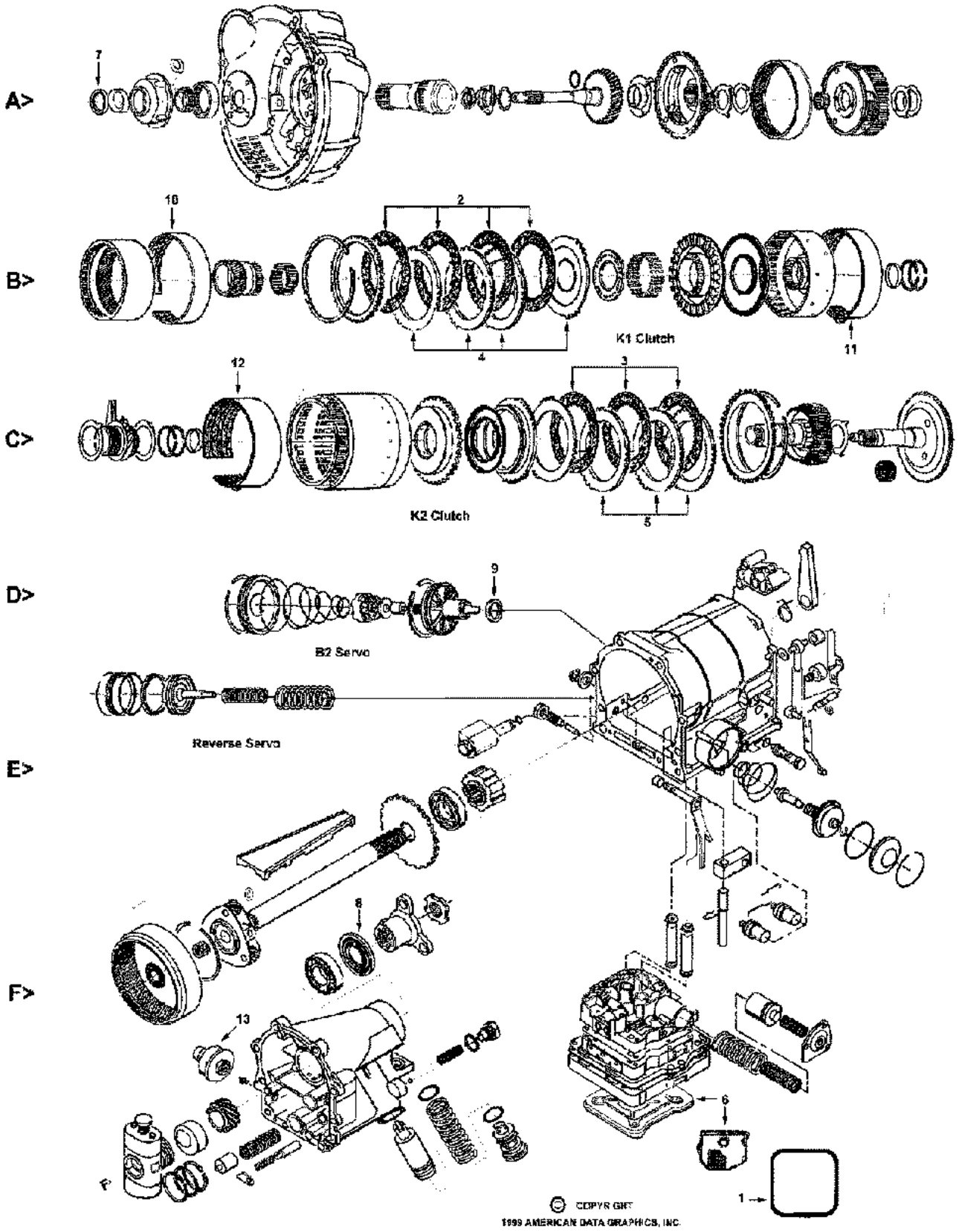

MERCEDES

722.0, 722.1, 722.2, (4 Bolt)

W3A040, W4B025, K4A40, K4C025

KITS

*Add Suffix SK for Super Kit

ILL	Description	Years	Friction Module	Steel Module	Overhaul Kit	Banner Kit	Master Kit
KT	Rebuilding Kit	70-82	054752	NA	054800	054901LS	NA

MISCELLANEOUS GASKETS & KIT COMPONENTS

ILL	ALTO No.	REF No.	Description	Spec	Year	Qty	Notes
1F	054816	115-271-1580	Gasket, Oil Pan	M. Rubber	70-82	1	

FRICTION CLUTCHES

ILL	ALTO No.	REF No.	Description	Spec	Year	Qty	Notes
2B	054700	112-272-0225	K1 clutch 722.0 & 722.2 - wave	.098/2.5	70-82	3-4	Tan - 51T - OD: 5.318" - PL
2B	054702	112-272-0025	K1 clutch 722.1 (some 722.0) - wave	.083/2.1	70-82	3-6	Tan - 51T - OD: 5.318" - PL
3C	054700	112-272-0225	K2 clutch 722.0 & 722.2 - wave	.098/2.5	70-82	2-4	Tan - 51T - OD: 5.318" - PL
3C	054702	112-272-0025	K2 clutch 722.1 (some 722.0) - wave	.083/2.1	70-82	3-6	Tan - 51T - OD: 5.318" - PL

STEEL CLUTCHES

ILL	ALTO No.	REF No.	Description	Spec	Year	Qty	Notes
4B	054701	109-272-1526	K1 clutch - all	.078/2.0	70-82	1	12T - ID: 4.073"
4B	054703	109-272-0626	K1 clutch - selective	.118/3.0	70-82	3-6	12T - ID: 4.073"
4B	054705	109-272-0826	K1 clutch - selective	.137/3.5	70-82	3-6	12T - ID: 4.073"
5C	054701	109-272-1526	K2 clutch - all	.078/2.0	70-82	1	12T - ID: 4.073"
5C	054703	109-272-0626	K2 clutch - selective	.118/3.0	70-82	3-6	12T - ID: 4.073"
5C	054705	109-272-0826	K2 clutch - selective	.137/3.5	70-82	3-6	12T - ID: 4.073"

FILTERS

ILL	ALTO No.	REF No.	Description	Spec	Year	Qty	Notes
6F	054940	115-270-0398	Filter without pipe - 722.1 & 722.2		70-82	1	
6F	054942	109-270-0298	Filter with 1" pipe - 722.0		70-82	1	
6F	054944	123-270-0098	Filter with 3/4 pipe - some 722.1		70-82	1	280E,CE, SE & 300SD

METAL CLAD SEALS

ILL	ALTO No.	REF No.	Description	Spec	Year	Qty	Notes
7A	054400	008-997-9146	Front Pump - 722.2	2.06/52	70-82	1	
7A	054400A	004-997-0547	Front Pump - 722.0 & 722.1	2.37/60	70-82	1	
8F	054402	008-997-9246	Extension Housing - 722.0, 722.1, 722.2	2.45/62	70-82	1	Nitrile
8F	054402A	012-997-8747	Extension Housing - 722.1 (some)	2.45/62	70-82	1	Poly
9D	054403	115-272-1192	B2 Servo piston		70-82	1	
N I	054410	011-997-06447	Speedometer		70-82	1	
N I	054401	006-997-6146	Manual Lever		70-82	1	

SEALING RINGS

ILL	ALTO No.	REF No.	Description	Spec	Year	Qty	Notes
KT	054600	NA	Sealing Ring Kit - complete		70-82	1	
KT	054601	NA	Sealing Ring Kit - Accumulator rings only		70-82	1	

MODULATORS

ILL	ALTO No.	REF No.	Description	Spec	Year	Qty	Notes
13F	054500	000-270-0179	Steel top* with green dot		70-82	1	*Can use plastic top
13F	054501	123-270-0079	White plastic top - Gas		70-82	1	
13F	054502	123-270-0679	Red plastic top - Diesel		70-82	1	

MERCEDES

722.3 (6 Bolt)

W4A040 1981-97

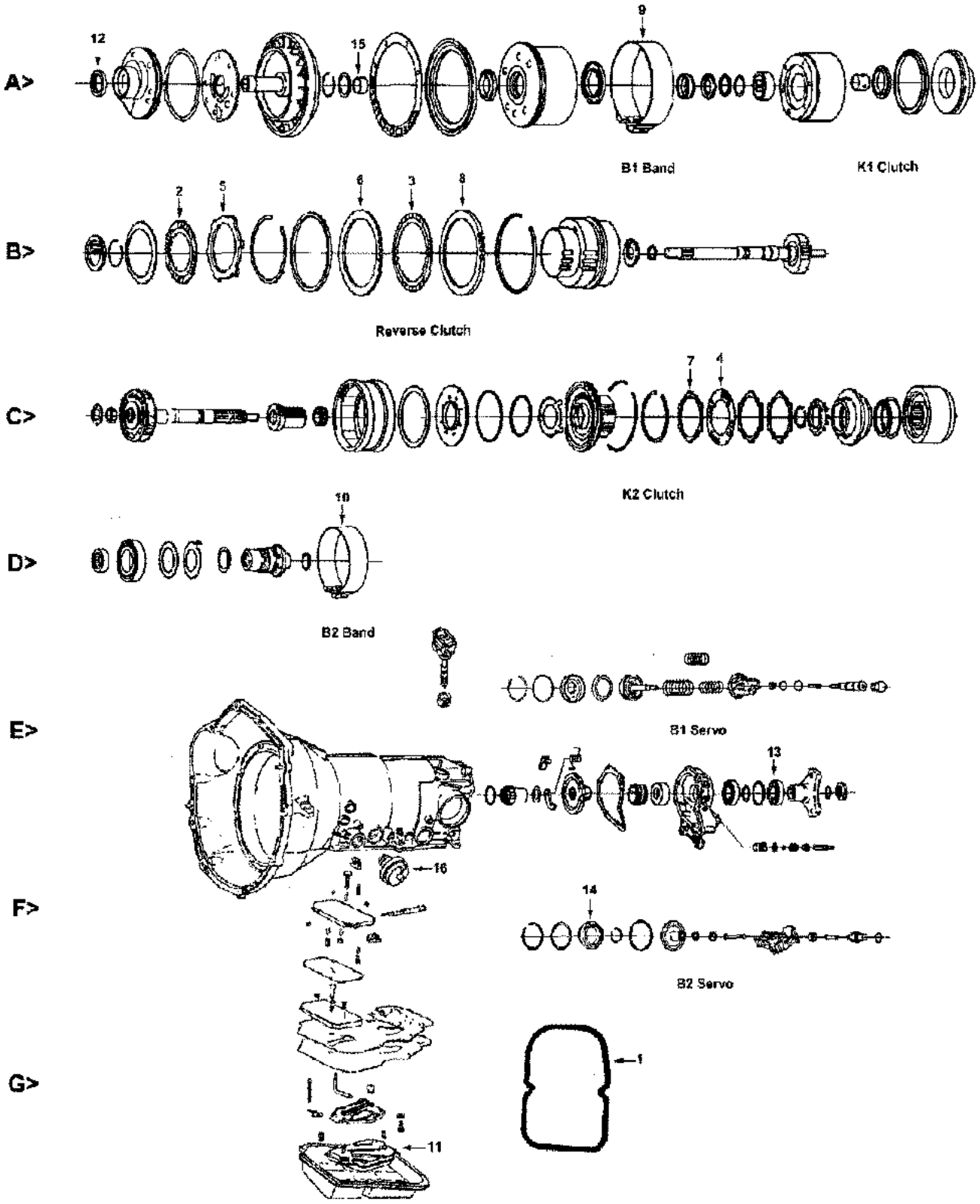

MERCEDES

722.3 (6 Bolt)

W4A040 1981-97

KITS

*Add Suffix SK for Super Kit

ILL	Description	Years	Friction Module	Steel Module	Overhaul Kit	Banner Kit	Master Kit
KT	Rebuilding Kit - Fits Transmissions: 722.301, 303, 304, 310, 312, 315, 317, 319, 320, 321, 342, 351, 355, 358, 359, 361, 367, 369	81-97	064752	064753	064800	064901LS	064901
KT	Rebuilding Kit - Fits Transmissions: 722.311, 313, 323, 350, 353, 362, 364, 365, 370	81-97	064752	064753A	064800	064901LS	064901A
KT	Rebuilding Kit - Fits Transmissions: 722.324, 354, 366	81-97	064752	064753B	064800	064901LS	064901B

MISCELLANEOUS GASKETS & KIT COMPONENTS

ILL	ALTO No.	REF No.	Description	Spec	Year	Qty	Notes
1G	064816	126-271-1180	Gasket, Oil Pan	M. Rubber	81-97	1	

FRICTION CLUTCHES

ILL	ALTO No.	REF No.	Description	Spec	Year	Qty	Notes
2B	064700	126-272-0625	K1 (Front) - wave	.084/2.14	81-97	4-5	HEG - 24T - OD: 5.265" - PLNI
3B	064702	126-272-0925	B3 (Reverse) - wave	.082/2.05	81-97	4	HEG - 36T - OD: 6.678" - PLNI
3B	064702A205	126-272-0925	B3 (Reverse) - wave	.082/2.05	81-97	4	Tan - 36T - OD: 6.678" - PLNI
4C	064704	126-272-0725	K2 (Rear) - wave	.084/2.14	81-97	4-5	HEG - 24T - OD: 4.870" - PLNI

STEEL CLUTCHES

ILL	ALTO No.	REF No.	Description	Spec	Year	Qty	Notes
5B	064701-200	126-272-4926	K1 (Front) - selective	.078/2.0	81-97	AR	6T - ID: 4.094"
5B	064701-350	126-272-5026	K1 (Front) - selective	.138/3.5	81-97	AR	6T - ID: 4.094"
5B	064701-400	126-272-5126	K1 (Front) - selective	.157/4.0	81-97	AR	6T - ID: 4.094"
5B	064701-450	126-272-3226	K1 (Front) - selective	.177/4.5	81-97	AR	6T - ID: 4.094"
5B	064701-500	126-272-3326	K1 (Front) - selective	.197/5.0	81-97	AR	6T - ID: 4.094"
5B	064701-550	NA	K1 (Front) - selective	.217/5.5	81-97	AR	6T - ID: 4.094"
6B	064703-230	126-272-6726	B3 (Reverse) - selective	.091/2.3	81-97	AR	36T - ID: 5.787"
6B	064703-280	126-272-6826	B3 (Reverse) - selective	.110/2.8	81-97	AR	36T - ID: 5.787"
6B	064703-330	126-272-6426	B3 (Reverse) - selective	.130/3.3	81-97	AR	36T - ID: 5.787"
6B	064703-380	126-272-6526	B3 (Reverse) - selective	.150/3.8	81-97	AR	36T - ID: 5.787"
7C	064705-200	126-272-4726	K2 (Rear) - selective	.078/2.0	81-97	AR	6T - ID: 3.464"
7C	064705-300	126-272-3626	K2 (Rear) - selective	.118/3.0	81-97	AR	6T - ID: 3.464"
7C	064705-350	126-272-4826	K2 (Rear) - selective	.138/3.5	81-97	AR	6T - ID: 3.464"
7C	064705-450	126-272-3426	K2 (Rear) - selective	.177/4.5	81-97	AR	6T - ID: 3.464"
7C	064705-500	126-272-3526	K2 (Rear) - selective	.197/5.0	81-97	AR	6T - ID: 3.464"
7C	064705-550	NA	K2 (Rear) - selective	.217/5.5	81-97	AR	6T - ID: 3.464"

PRESSURE PLATES

ILL	ALTO No.	REF No.	Description	Spec	Year	Qty	Notes
8B	064703-770	126-272-6926	B3 (Reverse) - Backing	.303/7.7	81-97	1	Not Available

BANDS

ILL	ALTO No.	REF No.	Description	Spec	Year	Qty	Notes
10D	064955	126-270-2062	B2 (Rear)	Tan	81-97	1	

FILTERS

ILL	ALTO No.	REF No.	Description	Spec	Year	Qty	Notes
11G	064940	126-277-0295	Filter - all except V8 engine		81-97	1	
11G	064942	126-277-0195	Filter - V8 engine only		81-97	1	

MERCEDES

722.3 (6 Bolt)

W4A040 1981-97

METAL CLAD SEALS

ILL	ALTO No.	REF No.	Description	Spec	Year	Qty	Notes
12A	064400	010-997-4947	Front Pump		81-97	1	
13E	054402A	012-997-8747	Extension Housing	2.45/62	81-97	1	Poly
14F	064404	006-997-7347	B2 Servo		81-97	1	
N I	064410	006-997-0147	Manual Lever		81-97	1	

SEALING RINGS

ILL	ALTO No.	REF No.	Description	Spec	Year	Qty	Notes
KT	064600	NA	Sealing Ring Kit - except Accum. rings		81-97	1	
KT	064600A	NA	Sealing Ring Kit - VB Accumulators		81-97	1	

BUSHINGS

ILL	ALTO No.	REF No.	Description	Spec	Year	Qty	Notes
15A	064200	NA	Front Pump		81-97	1	

MODULATORS

ILL	ALTO No.	REF No.	Description	Spec	Year	Qty	Notes
16F	064500	126-270-2579	Red Plastic Top		81-97	1	
16F	064501	126-270-0079	Green Plastic Top		81-97	1	
16F	064502	126-270-4379	Black Plastic Top		81-97	1	
16F	064503	126-270-2779	Brown Plastic Top		81-97	1	
N I	TBA	126-277-2075	Modulator Pin		81-97	1	

MERCEDES

722.4 (BABY 6 Bolt)

W4A020 1983-97

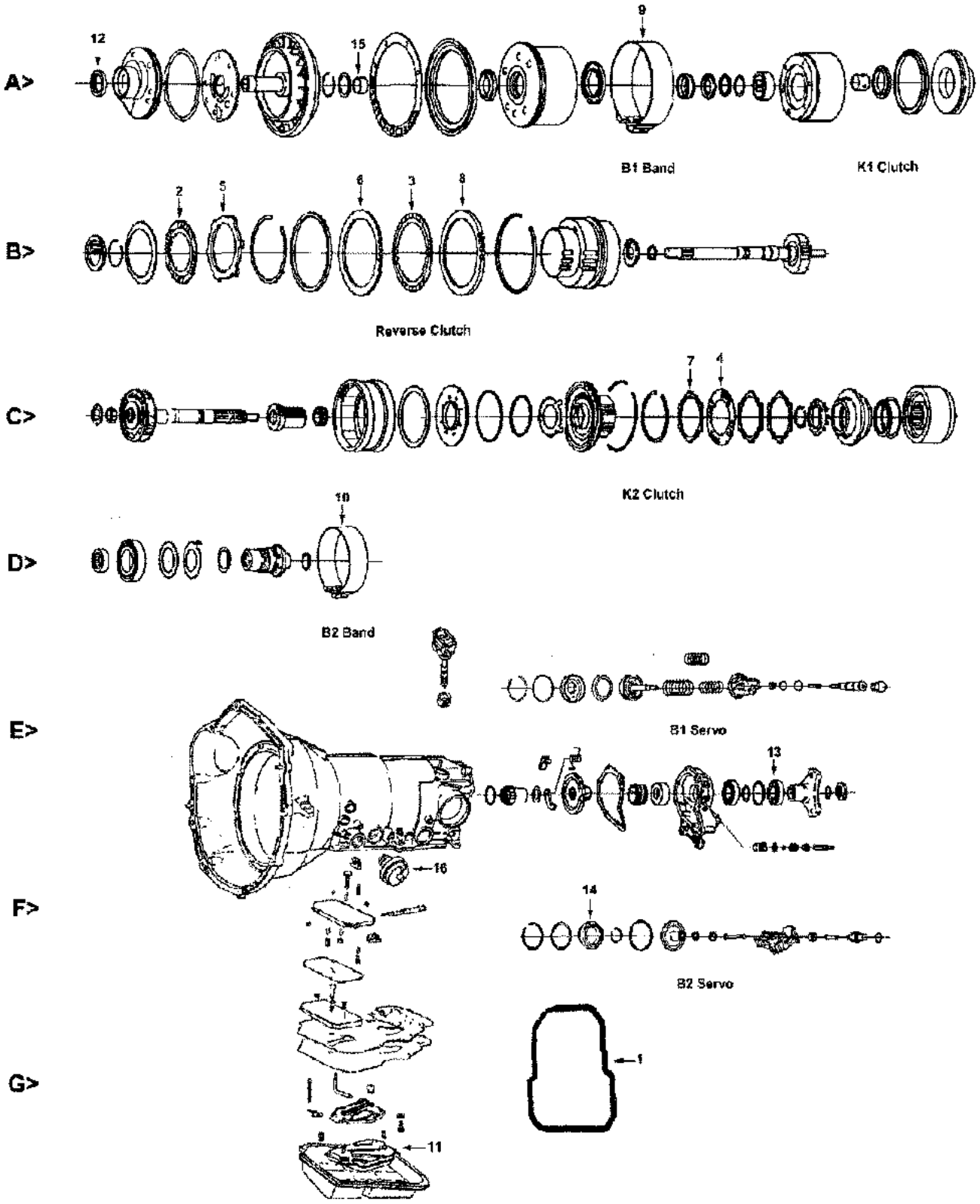

MERCEDES

722.4 (BABY 6 Bolt)

W4A020 1983-97

KITS

*Add Suffix SK for Super Kit

ILL	Description	Years	Friction Module	Steel Module	Overhaul Kit	Banner Kit	Master Kit
KT	Rebuilding Kit - Fits Transmissions: 722.400, 408, 414, 423	83-97	071752	071753	071800	071901LS	071901
KT	Rebuilding Kit - Fits Transmissions: 722.409, 413, 416	83-97	071752	071753A	071800	071901LS	071901A
KT	Rebuilding Kit - Fits Transmissions: 722.403	83-97	071752	071753B	071800	071901LS	071901B

MISCELLANEOUS GASKETS & KIT COMPONENTS

ILL	ALTO No.	REF No.	Description	Spec	Year	Qty	Notes
1G	071816	201-271-0380	Gasket, Oil Pan	M. Rubber	83-97	1	

FRICTION CLUTCHES

ILL	ALTO No.	REF No.	Description	Spec	Year	Qty	Notes
2B	071700	123-272-0225	K1 (Front) - wave	.084/2.14	83-97	3-5	HEG - 40T - OD: 4.678" - PLNI
3B	071702	201-272-0025	B3 (Reverse) - wave	.082/2.05	83-97	3-4	HEG - 30T - OD: 6.016" - PLNI
4C	071704	123-272-0125	K2 (Rear) - wave	.084/2.14	83-97	3-5	HEG - 36T - OD: 4.241" - PLNI

STEEL CLUTCHES

ILL	ALTO No.	REF No.	Description	Spec	Year	Qty	Notes
5B	071701-200	201-272-0726	K1 (Front) - selective	.078/2.0	83-97	AR	6T - ID: 3.524"
5B	071701-300	201-272-0826	K1 (Front) - selective	.118/3.0	83-97	AR	6T - ID: 3.524"
5B	071701-350	201-272-0926	K1 (Front) - selective	.138/3.5	83-97	AR	6T - ID: 3.524"
5B	071701-400	201-272-1026	K1 (Front) - selective	.157/4.0	83-97	AR	6T - ID: 3.524"
5B	071701-450	201-272-1126	K1 (Front) - selective	.177/4.5	83-97	AR	6T - ID: 3.524"
6B	071703-250	201-272-2526	B3 (Reverse) - OEM surface finish Selective	.098/2.5	83-97	AR	36T - ID: 5.060"
6B	071703-300	201-272-2126	B3 (Reverse) - OEM surface finish Selective	.118/3.0	83-97	AR	36T - ID: 5.060"
6B	071703-350	201-272-2226	B3 (Reverse) - OEM surface finish Selective	.138/3.5	83-97	AR	36T - ID: 5.060"
6B	071703-400	201-272-2626	B3 (Reverse) - OEM surface finish Selective	.157/4.0	83-97	AR	36T - ID: 5.060"
7C	071705-200	201-272-0126	K2 (Rear) - selective	.078/2.0	83-97	AR	6T - ID: 3.250"
7C	071705-300	201-272-0226	K2 (Rear) - selective	.118/3.0	83-97	AR	6T - ID: 3.250"
7C	071705-350	201-272-0326	K2 (Rear) - selective	.138/3.5	83-97	AR	6T - ID: 3.250"
7C	071705-400	201-272-0426	K2 (Rear) - selective	.157/4.0	83-97	AR	6T - ID: 3.250"
7C	071705-450	201-272-0526	K2 (Rear) - selective	.177/4.5	83-97	AR	6T - ID: 3.250"

PRESSURE PLATES

ILL	ALTO No.	REF No.	Description	Spec	Year	Qty	Notes
8C	071703-650	201-272-2326	B3 (Reverse) - backing	.256/6.5	83-97	1	Not Available

BANDS

ILL	ALTO No.	REF No.	Description	Spec	Year	Qty	Notes
9A	071950	124-270-0062	B1 (Intermediate)	Tan	83-97	1	

FILTERS

ILL	ALTO No.	REF No.	Description	Spec	Year	Qty	Notes
11G	064940	126-277-0295	Filter		83-97	1	

METAL CLAD SEALS

ILL	ALTO No.	REF No.	Description	Spec	Year	Qty	Notes
12A	071400	010-997-4547	Front Pump		83-97	1	
13E	054402A	012-997-8747	Extension Housing	2.45/62	83-97	1	Poly
14F	064404	006-997-7347	B2 Servo		83-97	1	

MERCEDES

722.4 (BABY 6 Bolt)

W4A020 1983-97

SEALING RINGS

ILL	ALTO No.	REF No.	Description	Spec	Year	Qty	Notes
KT	071600	NA	Sealing Ring Kit - except Accum. rings		83-97	1	
KT	064600A	NA	Sealing Ring Kit - VB Accumulators		83-97	1	

MODULATORS

ILL	ALTO No.	REF No.	Description	Spec	Year	Qty	Notes
16F	064500	126-270-2579	Red Plastic Top		83-97	1	
16F	064502	126-270-4379	Black Plastic Top		81-97	1	
16F	064503	126-270-2779	Brown Plastic Top		81-97	1	

MERCEDES

722.5 (W5A030)

5 SPEED with OVERDRIVE 1990-On

KITS

*Add Suffix SK for Super Kit

ILL	Description	Years	Friction Module	Steel Module	Overhaul Kit	Banner Kit	Master Kit
KT	Rebuilding Kit - Fits Transmissions: 722.500, 502, 507, 508	90-On	117752	117753	117800	117901LS	117901

MISCELLANEOUS GASKETS & KIT COMPONENTS

ILL	ALTO No.	REF No.	Description	Spec	Year	Qty	Notes
N I	064816	126-271-1180	Gasket, Oil Pan	M. Rubber	90-On	1	

FRICTION CLUTCHES

ILL	ALTO No.	REF No.	Description	Spec	Year	Qty	Notes
N I	064700	126-272-0625	K1 (Front) - wave	.084/2.14	90-On	4	HEG - 24T - OD: 5.265" - PL
N I	064700A214	126-272-0625	K1 (Front) - wave	.084/2.14	90-On	4	Tan - 24T - OD: 5.265" - PL
N I	064702	126-272-0925	B3 (Reverse) - wave	.082/2.05	90-On	4	HEG - 36T - OD: 6.678" - PL
N I	064702A205	126-272-0925	B3 (Reverse) - wave	.082/2.05	90-On	4	Tan - 36T - OD: 6.678" - PL
N I	064704	126-272-0725	K2 (Rear) - wave	.084/2.14	90-On	4	HEG - 24T - OD: 4.870" - PL
N I	064704A214	126-272-0725	K2 (Rear) - wave	.084/2.14	90-On	4	Tan - 24T - OD: 4.870" - PL
N I	117708	124-272-0125	KS - Overrun	.084/2.14	90-On	4	Tan - 22T - OD:4.18" - PLNI
N I	117706	124-272-0025	BS - Overdrive	.084/2.14	90-On	4	Tan - 28T - OD:5.50" - PLNI

STEEL CLUTCHES

ILL	ALTO No.	REF No.	Description	Spec	Year	Qty	Notes
N I	064701-200	126-272-4926	K1 (Front) - selective	.078/2.0	90-On	AR	6T - ID: 4.094"
N I	064701-350	126-272-5026	K1 (Front) - selective	.138/3.5	90-On	AR	6T - ID: 4.094"
N I	064701-400	126-272-5126	K1 (Front) - selective	.157/4.0	90-On	AR	6T - ID: 4.094"
N I	064701-450	126-272-3226	K1 (Front) - selective	.177/4.5	90-On	AR	6T - ID: 4.094"
N I	064701-500	126-272-3326	K1 (Front) - selective	.197/5.0	90-On	AR	6T - ID: 4.094"
N I	064701-550	NA	K1 (Front) - selective	.217/5.5	90-On	AR	6T - ID: 4.094"
N I	064703-230	126-272-6726	B3 (Reverse) - selective	.091/2.3	90-On	AR	36T - ID: 5.787"
N I	064703-280	126-272-6826	B3 (Reverse) - selective	.110/2.8	90-On	AR	36T - ID: 5.787"
N I	064703-330	126-272-6426	B3 (Reverse) - selective	.130/3.3	90-On	AR	36T - ID: 5.787"
N I	064703-380	126-272-6526	B3 (Reverse) - selective	.150/3.8	90-On	AR	36T - ID: 5.787"
N I	064705-200	126-272-4726	K2 (Rear) - selective	.078/2.0	90-On	AR	6T - ID: 3.464"
N I	064705-300	126-272-3626	K2 (Rear) - selective	.118/3.0	90-On	AR	6T - ID: 3.464"
N I	064705-350	126-272-4826	K2 (Rear) - selective	.138/3.5	90-On	AR	6T - ID: 3.464"
N I	064705-450	126-272-3426	K2 (Rear) - selective	.177/4.5	90-On	AR	6T - ID: 3.464"
N I	064705-500	126-272-3526	K2 (Rear) - selective	.197/5.0	90-On	AR	6T - ID: 3.464"
N I	064705-550	NA	K2 (Rear) - selective	.217/5.5	90-On	AR	6T - ID: 3.464"
N I	117709-200	124-272-0226	KS (Overrun)	.078/2.0	90-On	4	28T - ID: 3.504"
N I	117709-350	124-272-0326	KS (Overrun)	.138/3.5	90-On	1	28T - ID: 3.504"
N I	117707-250	129-272-0126	BS (Overdrive)	.098/2.5	90-On	1	8T - ID: 4.786"
N I	117707-545	129-272-0226	BS (Overdrive)	.215/5.5	90-On	3	8T - ID: 4.786"

PRESSURE PLATES

ILL	ALTO No.	REF No.	Description	Spec	Year	Qty	Notes
N I	064703-770	126-272-6926	B3 (Reverse) - Backing	.303/7.7	90-On	1	Not Available

BANDS

ILL	ALTO No.	REF No.	Description	Spec	Year	Qty	Notes
N I	064955	126-270-2062	B2 (Rear)	Tan	90-On	1	

FILTERS

ILL	ALTO No.	REF No.	Description	Spec	Year	Qty	Notes
N I	117940	129-277-0195	Filter		90-On	1	

MERCEDES

722.5 (W5A030)

5 SPEED with OVERDRIVE 1990-On

METAL CLAD SEALS

ILL	ALTO No.	REF No.	Description	Spec	Year	Qty	Notes
N I	064400	010-997-4947	Front Pump		90-On	1	
N I	054402A	012-997-8747	Extension Housing	2.45/62	90-On	1	Poly
N I	064404	006-997-7347	B2 Servo		90-On	1	
N I	064410	006-997-0147	Manual Lever		90-On	1	

MODULATORS

ILL	ALTO No.	REF No.	Description	Spec	Year	Qty	Notes
N I	064502	126-270-4379	Black Plastic Top		90-On	1	

HARD PARTS

ILL	ALTO No.	REF No.	Description	Spec	Year	Qty	Notes
N I	117350	68584A	Rear Planetary w/o Shaft		90-On	1	

MERCEDES

722.6 (W5A580, W5A330)

5 SPEED with OVERDRIVE 1996-On

A>

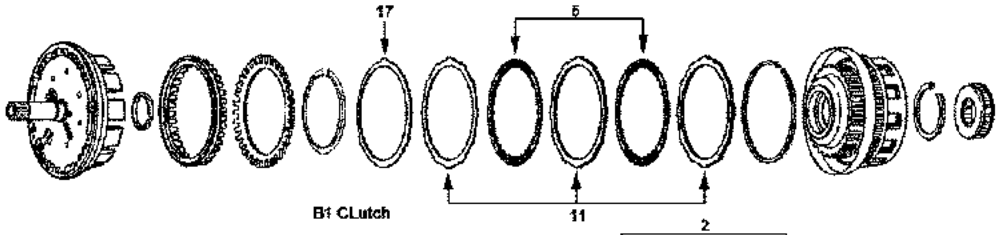

B>

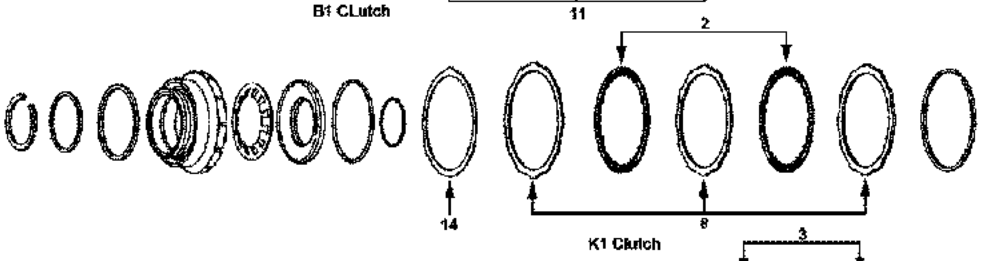

C>

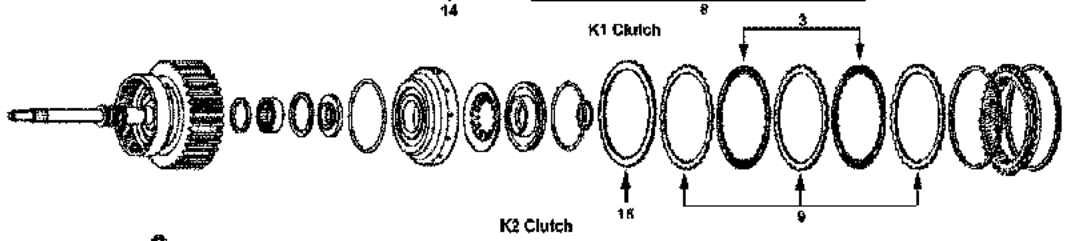

D>

E>

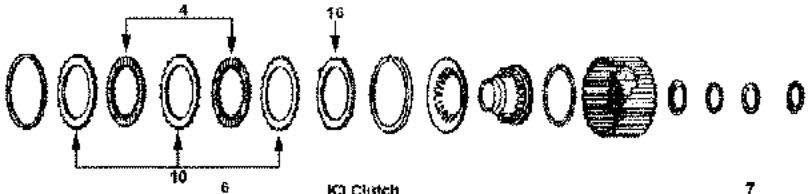

F>

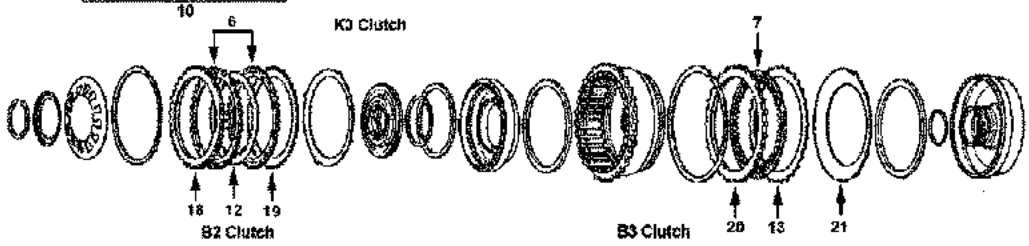

G>

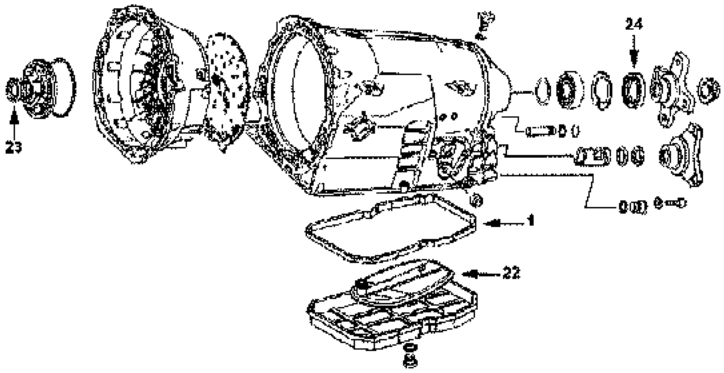

MERCEDES

722.6 (W5A580, W5A330) 5 Speed 1996-On
Gelandewagen (W460, W461, W463) Diesel 1987-1998

KITS

*Add Suffix SK for Super Kit

ILL	Description	Years	Friction Module	Steel Module	Overhaul Kit	Banner Kit	Master Kit
	All Overhaul Kits are OE Style						
KT	Rebuilding Kit - W5A580 with B1 Piston	96-97	141752	141753	141800	141901LS	141901
KT	Rebuilding Kit - W5A580 with B1 Piston	98-01	141752A	141753A	141800	141901ALS	141901A
KT	Rebuilding Kit - W5A580 with B1 Piston Combo	96-01	141752D	141753D	141800	141901DLS	141901D
KT	Rebuilding Kit - W5A580 Combo (No Piston)	96-01	141752D	141753D	141800AX	141901DXLS	141901DX
KT	Rebuilding Kit - W5A580 with B1 Piston	02-On	141752B	141753B	141800	141901BLS	141901B
KT	Rebuilding Kit - W5A330 with B1 Piston	04-On	141752C	141753C	141800	141901CLS	141901C

KITS - HI-PERFORMANCE Red Eagle® with PowerPack®

ILL	Description	Years	Friction and Steel Module	Overhaul Kit	Banner Kit	Master Kit
KT	Rebuilding Kit with Pistons	96-On	141750HP	141800	141901HPLS	141901HP

MISCELLANEOUS GASKETS & KIT COMPONENTS

ILL	ALTO No.	REF No.	Description	Spec	Year	Qty	Notes
1G	141816	NA	Gasket, Oil Pan	M. Rubber	96-On	1	

FRICTION CLUTCHES

ILL	ALTO No.	REF No.	Description	Spec	Year	Qty	Notes
2B	141700-210	140-272-0025	K1 Clutch	.084/2.14	96-On	4-6	HEG - 30T - OD: 6.796" - PL
2B	141700A206	52108507AA	K1 Clutch (1 sided) - internal spline W5A330	.081/2.07	04-On	5	HEG - 30T - OD: 6.796" - PL
8B	141701A206	52108508AA	K1 Clutch (1 sided) - external spline W5A330	.081/2.07	04-On	5	HEG - 12T - ID: 6.065" - PL
3C	141706-214	210-272-0025	K2 Clutch- Small ID	.084/2.14	96-01	4-5	HEG - 36T - OD: 6.475" - PL
3C	141706-160	NA	K2 Clutch - selective	.062/1.6	96-01	AR	HEG - 36T - OD: 6.475" - PL
3C	141706A214	140-272-0125	K2 Clutch - Large ID	.084/2.14	96-On	6	HEG - 36T - OD: 6.475" - PL
4E	141708-160	140-272-0225	K3 Clutch	.063/1.6	96-97	3-4	HEG - 24T - OD: 4.486" - PL
4E	141708-216	140-272-0725	K3 Clutch	.085/2.16	98-On	5	HEG - 24T - OD: 4.486" - PL
N I	141708A188	NL	K3 Clutch (1 sided) - internal spline - W460,461,463	.074/1.88	87-98	6	HEG - 24T - OD: 4.485" - PL
N I	141709A188	NL	K3 Clutch (1 sided) - external spline - W460,461,463	.074/1.88	87-98	6	HEG - 24T - ID: 3.465" - PL
4E	141708A208	52108528AA	K3 Clutch (1 sided) - internal spline W5A330	.082/2.08	04-On	4-5	HEG - 24T - OD: 4.486" - PL
10E	141709A211	52108529AA	K3 Clutch (1 sided) - external spline W5A330	.083/2.11	04-On	4-5	HEG - 24T - ID: 3.465" - PL
5A	141700-210	140-272-0025	B1 Clutch	.084/2.14	96-01	3-4	HEG - 30T - OD: 6.796" - PL
2B	141700A206	52108507AA	B1 Clutch (1 sided) - internal spline W5A330	.081/2.07	04-On	5	HEG - 30T - OD: 6.796" - PL
8B	141701A206	52108508AA	B1 Clutch (1 sided) - external spline W5A330	.081/2.07	04-On	5	HEG - 12T - ID: 6.065" - PL
6F	141702-160	140-272-0026	B2 Clutch - external spline	.063/1.6	96-On	4-5	HEG - 40T - OD: 6.519" - PL
6F	141702A160	140-272-0026	B2 Clutch - external spline	.063/1.6	96-On	4-5	SAS - 40T - OD: 6.519" - PL
7F	141704-160	140-272-0625	B3 Clutch	.063/1.6	96-On	3-5	HEG - 40T - OD: 6.519" - PL
7F	141704A160	140-272-0625	B3 Clutch	.063/1.6	96-On	3-5	SAS - 40T - OD: 6.519" - PL
7F	126720A	NA	Transfer Case	.072/1.83	06-On	6	G3 - 16T - ID: 4.040"

FRICTION CLUTCHES-HI PERFORMANCE

ILL	ALTO No.	REF No.	Description	Spec	Year	Qty	Notes
N I	141740-160	NA	B1/K1 Clutch	.063/1.6	96-On	AR	Red - 30T - OD: 6.796"
N I	141742-160	NA	B2 Clutch	.063/1.6	96-On	AR	Red - 40T - OD: 6.519"
N I	141746A160	NA	K2 Clutch	.063/1.6	96-On	AR	Red - 36T - OD: 6.479"
N I	141746B160	NA	K2 Clutch	.063/1.6	96-On	AR	G3BK - 36T - OD: 6.479"
N I	141748-160	NA	K3 Clutch	.063/1.6	96-On	AR	Red - 24T - OD: 4.486"
N I	141748B160	NA	K3 Clutch	.063/1.6	96-On	AR	G3BK - 24T - OD: 4.486"

MERCEDES

722.6 (W5A580, W5A330) 5 Speed 1996-On
Gelandewagen (W460, W461, W463) Diesel 1987-1998

STEEL CLUTCHES

ILL	ALTO No.	REF No.	Description	Spec	Year	Qty	Notes
8B	141701-180	140-272-0226	K1 Clutch	.071/1.8	96-On	1	12T - ID: 6.065"
8B	141701-280	140-272-2826	K1 Clutch	.110/2.8	02-On	5	12T - ID: 6.065"
8B	141701-350	140-272-0326	K1 Clutch	.138/3.5	96-01	3-5	12T - ID: 6.065"
8B	141701-400	140-272-0426	K1 Clutch	.157/4.0	96-On	1	12T - ID: 6.065"
9C	141707-180	140-272-0626	K2 Clutch	.071/1.8	96-On	1	30T - ID: 5.770"
9C	141707-280	140-272-2926	K2 Clutch	.110/2.8	02-On	5	30T - ID: 5.770"
9C	141707-350	140-272-0726	K2 Clutch	.138/3.5	96-01	2-3	30T - ID: 5.770"
10E	141709-180	140-272-1026	K3 Clutch	.071/1.8	96-On	1	24T - ID: 3.465"
10E	141709-278	140-272-2726	K3 Clutch	.109/2.78	98-On	4	24T - ID: 3.465"
10E	141709-350	140-272-1126	K3 Clutch	.138/3.5	96-97	3-4	24T - ID: 3.465"
11A	141701-180	140-272-0226	B1 Clutch	.071/1.8	96-On	1	12T - ID: 6.065"
11A	141701-280	140-272-2826	B1 Clutch	.110/2.8	02-On	3	12T - ID: 6.065"
11A	141701-350	140-272-0326	B1 Clutch	.138/3.5	96-01	2-3	12T - ID: 6.065"
11A	141701-400	140-272-0426	B1 Clutch	.157/4.0	96-On	1	12T - ID: 6.065"
12F	141703-180	140-272-0425	B2 (internal spline)	.071/1.8	96-On	3-4	24T - ID: 4.825"
13F	141705-180	140-272-1826	B3 Clutch	.071/1.8	96-On	3-4	30T - ID: 6.100"
NI	126721A	NA	Transfer Case	.052/1.32	06-On	6	40T - OD: 5.010"

STEEL CLUTCHES- HI PERFORMANCE- KOLENE®

ILL	ALTO No.	REF No.	Description	Spec	Year	Qty	Notes
N I	141701K180	NA	B1/K1 Clutch	.071/1.8	96-On	AR	12T - ID: 6.065"
N I	141701K350	NA	B1/K1 Clutch	.138/3.5	96-On	AR	12T - ID: 6.065"
N I	141703K180	NA	B2 Clutch	.071/1.8	96-On	AR	24T - ID: 4.825"
N I	141707K180	NA	K2 Clutch	.071/1.8	96-On	AR	30T - ID: 5.768"
N I	141707K280	NA	K2 Clutch	.110/2.8	96-On	AR	30T - ID: 5.768"
N I	141709K180	NA	K3 Clutch	.071/1.8	96-On	AR	24T - ID: 3.465"
N I	141709K400	NA	K3 Clutch	.157/4.0	96-On	AR	24T - ID: 3.465"

TORQUE CONVERTER-FRICTION RINGS AND CLUTCHES

ILL	ALTO No.	REF No.	Description	Spec	Year	Qty	Notes
KT	001228	NA	Torque Converter		96-On	1	2 Drings, 1 Lathe Cut Seal
KT	141759	NA	Torque Converter PowerPack®		96-On	1	
KT	141758A	NA	Torque Converter Replacement Pack 290mm		96-On	1	
KT	141758	MB-CP-272KBW	Torque Converter OE Pack Replacement 272mm		96-On	1	
N I	141714X	MB-CP-7BW	Friction Torque Converter (segmented paper)	.107/2.7	96-On	AR	Red - 34T - OD: 6.929" - SB
N I	141714X232	MB-CP-7BW	Friction Torque Converter (segmented paper)-Selective	.091/2.32	96-On	AR	Red - 34T - OD: 6.929" - SB
N I	141715-177	MB-CP-3KR	Steel Torque Converter	.069/1.75	96-On	AR	20T - ID: 5.629"
N I	141715-390	MB-CP-4K	Steel Torque Converter	.155/3.95	96-On	AR	20T - ID: 5.629"
N I	141715-497	NA	Steel Torque Converter	.196/4.97	96-On	AR	20T - ID: 5.629"
N I	141715AK177	NA	Steel Torque Converter PowerPack® component	.069/1.75	96-On	3	20T - ID: 5.629"
N I	141717	NA	Steel Torque Converter PowerPack® component	.157/3.99	96-On	1	20T - ID: 5.629" with step

PRESSURE PLATES

ILL	ALTO No.	REF No.	Description	Spec	Year	Qty	Notes
14B	TBA	NA	K1 - Cushion spring (Belleville)	.059/1.5	96-On	1	
14B	141761X	NA	K1 Clutch	.138/3.51	96-On	1	
15C	141707-400	140-272-0826	K2 - Apply plate	.157/4.0	96-On	1	
16E	141709-400	140-272-1226	K3 - Apply plate	.157/4.0	96-On	1	
17A	TBA	NA	B1 - Cushion spring (Belleville)	.059/1.5	96-On	1	
18F	141702SC180	140-272-1426	B2 - Backing plate	.071/1.8	96-On	1	

MERCEDES

722.6 (W5A580, W5A330) 5 Speed 1996-On
Gelandewagen (W460, W461, W463) Diesel 1987-1998

PRESSURE PLATES

ILL	ALTO No.	REF No.	Description	Spec	Year	Qty	Notes
18F	141762X	NA	B2 Clutch	.250/6.35	96-On	1	
21F	TBA	NA	B3 - Cushion spring (Belleville)	.110/2.8	96-On	1	

OEI® Original Equipment Improvements

ILL	ALTO No.	REF No.	Description	Spec	Year	Qty	Notes
KT	141759	NA	Torque Converter PowerPack®		96-On	1	
KT	141758A	NA	Torque Converter Replacement Pack 290mm		96-On	1	
KT	141758	MB-CP-272KBW	Torque Converter OE Pack Replacement 272mm		96-On	1	

FILTERS

ILL	ALTO No.	REF No.	Description	Spec	Year	Qty	Notes
22G	141940	140-277-0095	Filter		96-On	1	

METAL CLAD SEALS

ILL	ALTO No.	REF No.	Description	Spec	Year	Qty	Notes
23G	064400	010-997-4947	Front Pump		96-On	1	
24G	141405	140-997-0846	Extension Housing		96-On	1	
N I	064410	006-997-0147	Manual Lever		96-On	1	

SNAP RINGS

ILL	ALTO No.	REF No.	Description	Spec	Year	Qty	Notes
21F	141250	A1409949240	Snap Ring	.086/2.18	96-On	1	
21F	141251	A1409949940	Snap Ring	.075/1.91	96-On	1	

BUSHINGS

ILL	ALTO No.	REF No.	Description	Spec	Year	Qty	Notes
N I	141200	NA	Pump bushing		96-On	1	

ELECTRONIC CONTROL COMPONENTS

ILL	ALTO No.	REF No.	Description	Spec	Year	Qty	Notes
NI	141352B	140-270-1161	Valve Body Conductor Plate-Aftermarket		96-On	1	

PISTONS

ILL	ALTO No.	REF No.	Description	Spec	Year	Qty	Notes
N I	141670	NA	Piston Kit		96-On	1	contains 2 pistons
N I	141301A	NA	B1 / C1 (.70 thick)		96-On	1	
N I	141301B	NA	B1 / C1 (.88 thick)		96-On	1	

HARD PARTS

ILL	ALTO No.	REF No.	Description	Spec	Year	Qty	Notes
N I	141322A	NA	Sprag, Rear Sungear		96-On	1	
N I	141322B	NA	Sprag, K1		96-On	1	
N I	141350	NA	Planetary Gear 38.9mm OD		96-On	1	22 Teeth
N I	141351	NA	Planetary Gear 32.8mm OD		96-On	1	18 Teeth
N I	141559	NA	Adapter Plug - Connector		96-On	1	

MERCEDES

722.7 (W5A180)

4 SPEED with OVERDRIVE 1998-On

KITS

*Add Suffix SK for Super Kit

ILL	Description	Years	Friction and Steel Module	Overhaul Kit	Banner Kit	Master Kit
KT	Rebuilding Kit - without Molded Pistons	98-On	147750	147800X	NA	147901X

FRICTION CLUTCHES

ILL	ALTO No.	REF No.	Description	Spec	Year	Qty	Notes
N I	147700-160	168-372-0925	1st Clutch (1 sided) - internal spline	.063/1.6	98-On	3	HEG - 24T - OD: 4.522" - PL
N I	147701-160	168-372-0426	1st Clutch (1 sided) - external spline	.063/1.6	98-On	3	HEG - 30T - ID: 3.950" - PL
N I	147700-160	168-372-0925	2nd Clutch (1 sided) - internal spline	.063/1.6	98-On	4	HEG - 24T - OD: 4.522" - PL
N I	147701-160	168-372-0426	2nd Clutch (1 sided) - external spline	.063/1.6	98-On	4	HEG - 30T - ID: 3.950" - PL
N I	147702-160	168-372-0725	3rd Clutch (1 sided) - internal spline	.063/1.6	98-On	3	HEG - 24T - OD: 4.361" - PL
N I	147703-160	168-372-1126	3rd Clutch (1 sided) - external spline	.063/1.6	98-On	3	HEG - 24T - ID: 3.518" - PL
N I	147702-160	168-372-0725	4rd Clutch (1 sided) - internal spline	.063/1.6	98-On	3	HEG - 24T - OD: 4.361" - PL
N I	147703-160	168-372-1126	4rd Clutch (1 sided) - external spline	.063/1.6	98-On	3	HEG - 24T - ID: 3.518" - PL
N I	147704-160	168-372-0825	5th Clutch (1 sided) - internal spline	.063/1.6	98-On	3	HEG - 32T - OD: 4.242" - PL
N I	147705-160	168-372-1026	5th Clutch (1 sided) - external spline	.063/1.6	98-On	3	HEG - 24T - ID: 3.675" - PL
N I	147700-160	168-372-0925	Reverse (1 sided) - internal spline	.063/1.6	98-On	3	HEG - 24T - OD: 4.522" - PL
N I	147701-160	168-372-0426	Reverse (1 sided) - external spline	.063/1.6	98-On	3	HEG - 30T - ID: 3.950" - PL
N I	147714	NA	Torque Converter - square tooth	.106/2.69	98-On	AR	HEG - 30T - ID: 6.930" - SB
N I	147714A	NA	Torque Converter - square tooth	.110/2.79	98-On	AR	HEG - 30T - ID: 6.930" - SB

FILTERS

ILL	ALTO No.	REF No.	Description	Spec	Year	Qty	Notes
N I	147940	168-377-0395	Filter		98-On	1	

MERCEDES
722.9
2004-On

KITS

*Add Suffix SK for Super Kit

ILL	Description	Years	Friction Module	Steel Module	Overhaul Kit	Banner Kit	Master Kit
KT	Rebuilding Kit	04-On	189752	189753	189800	189901LS	189901
KT	Rebuilding Kit - without Molded Pistons- OE Style	04-On	189752	189753	189800AX	189901XLS	189901X

MISCELLANEOUS GASKETS & KIT COMPONENTS

ILL	ALTO No.	REF No.	Description	Spec	Year	Qty	Notes
N I	189816	220-271-0180	Gasket, Oil Pan	M.Rubber	04-On	1	
N I	189816A	220-271-0380	Gasket, Oil Pan	M.Rubber	12-On	1	
N I	A20030C	MB-0-11V	D Ring Torque Converter - Inner		04-On	1	
N I	A20031C	MB-0-12V	D Ring Torque Converter - Outer		04-On	1	
N I	A38012	MB-0-5V	Lathe Cut Seal, Shaft (TC)		04-On	1	

FRICTION CLUTCHES

ILL	ALTO No.	REF No.	Description	Spec	Year	Qty	Notes
N I	189710-185	NL	K1 Clutch (1 sided) - internal spline	.073/1.85	04-On	5	HEG - 30T - OD: 5.843" - PL
N I	189710A185	NL	K1 Clutch (1 sided) - internal spline	.073/1.85	04-On	5	SAS - 30T - OD: 5.843" - PL
N I	189711-190	NL	K1 Clutch (1 sided) - external spline	.075/1.9	04-On	5	HEG - 36T - ID: 5.023" - PL
N I	189711A190	NL	K1 Clutch (1 sided) - external spline	.075/1.9	04-On	5	SAS - 36T - ID: 5.023" - PL
N I	189706-208	220-272-0225	K2 Clutch (1 sided) - internal spline	.082/2.08	04-On	5	HEG - 36T - OD: 6.591" - PL
N I	189706A208	220-272-0225	K2 Clutch (1 sided) - internal spline	.082/2.08	04-On	5	SAS - 36T - OD: 6.591" - PL
N I	189707-208	220-272-0726	K2 Clutch (1 sided) - external spline	.082/2.08	04-On	5	HEG - 30T - ID: 6.009" - PL
N I	189707A208	220-272-0726	K2 Clutch (1 sided) - external spline	.082/2.08	04-On	5	SAS - 30T - ID: 6.009" - PL
N I	141708A208	NL	K3 Clutch (1 sided) - internal spline	.082/2.08	04-On	5	SAS - 24T - OD: 4.485" - PL
N I	141708B208	NL	K3 Clutch (1 sided) - internal spline	.082/2.08	04-On	5	HEG - 24T - OD: 4.485" - PL
N I	141709A211	NL	K3 Clutch (1 sided) - external spline	.083/2.11	04-On	5	SAS - 24T - ID: 3.465" - PL
N I	141709B211	NL	K3 Clutch (1 sided) - external spline	.083/2.11	04-On	5	HEG - 24T - ID: 3.465" - PL
N I	189700-208	NL	B1 Clutch (1 sided) - internal spline	.082/2.08	04-On	4	HEG - 36T - OD: 7.495" - PL
N I	189700A208	NL	B1 Clutch (1 sided) - internal spline	.082/2.08	04-On	4	SAS - 36T - OD: 7.495" - PL
N I	189701-208	NL	B1 Clutch (1 sided) - external spline	.082/2.08	04-On	4	HEG - 18T - ID: 6.710" - PL
N I	189701A208	NL	B1 Clutch (1 sided) - external spline	.082/2.08	04-On	4	SAS - 18T - ID: 6.710" - PL
N I	141702-160	220-272-1726	B2 Clutch- external spline	.063/1.6	04-On	6	HEG - 40T - ID: 5.216" - PL
N I	189700-208	NL	B3 Clutch (1 sided) - internal spline	.082/2.08	04-On	4	HEG - 36T - OD: 7.495" - PL
N I	189701-208	NL	B3 Clutch (1 sided) - external spline	.082/2.08	04-On	4	HEG - 18T - ID: 6.710" - PL
N I	141704-160	220-272-0725	BR Clutch	.063/1.6	04-On	5	HEG - 46T - OD: 7.086" - PL
N I	189734-157	NA	Transfer Case - Internal Teeth	.062/1.57	04-On	2	OTHER - 36T - OD: 4.487"

STEEL CLUTCHES

ILL	ALTO No.	REF No.	Description	Spec	Year	Qty	Notes
N I	141703-180	140-272-0425	B2 Clutch - internal spline	.071/1.8	04-On	5	24T - OD: 6.097"
N I	141705-180	140-272-1826	BR Clutch	.071/1.8	04-On	5	30T - ID: 6.100"
N I	189735-120	NA	Transfer Case - External Teeth	.047/1.19	04-On	3	8T - ID: 3.306"

TORQUE CONVERTER- FRICTION RINGS AND CLUTCHES

ILL	ALTO No.	REF No.	Description	Spec	Year	Qty	Notes
N I	141718A	NL	Friction Torque Converter	.109/2.77	04-On	2	Red- 40T - ID: 6.104" - SB
N I	141719A	MB-CP-15S	Steel Torque Converter	.078/2.00	04-On	3	36T - OD : 7.400"
N I	141719A180	MB-CP-14S	Steel Torque Converter	.071/1.80	04-On	1	36T - OD : 7.400"

PRESSURE PLATES

ILL	ALTO No.	REF No.	Description	Spec	Year	Qty	Notes
N I	141709-400	140-272-1226	K3 Clutch		04-On	1	24T - ID: 3.465"

MERCEDES

722.9

2004-On

PRESSURE PLATES

N I	141702SC180	140-272-1426	B2 Clutch- Apply Plate		04-On	1	40T - ID: 5.216"

FILTERS

ILL	ALTO No.	REF No.	Description	Spec	Year	Qty	Notes
N I	189940	220-277-0395	Filter		04-On	1	
		220-277-0695					

PISTONS

ILL	ALTO No.	REF No.	Description	Spec	Year	Qty	Notes
N I	189670	NA	Piston Kit		04-On	1	contains 3 pistons
N I	189300	221-272-2031	B1		04-On	1	
N I	189301	221-272-2131	B3		04-On	1	
N I	189302	220-272-3231	K1		04-On	1	

MITSUBISHI

MITSUBISHI, HYUNDAI, CHRYSLER
KM 3 & 4 SPEED 1979-On

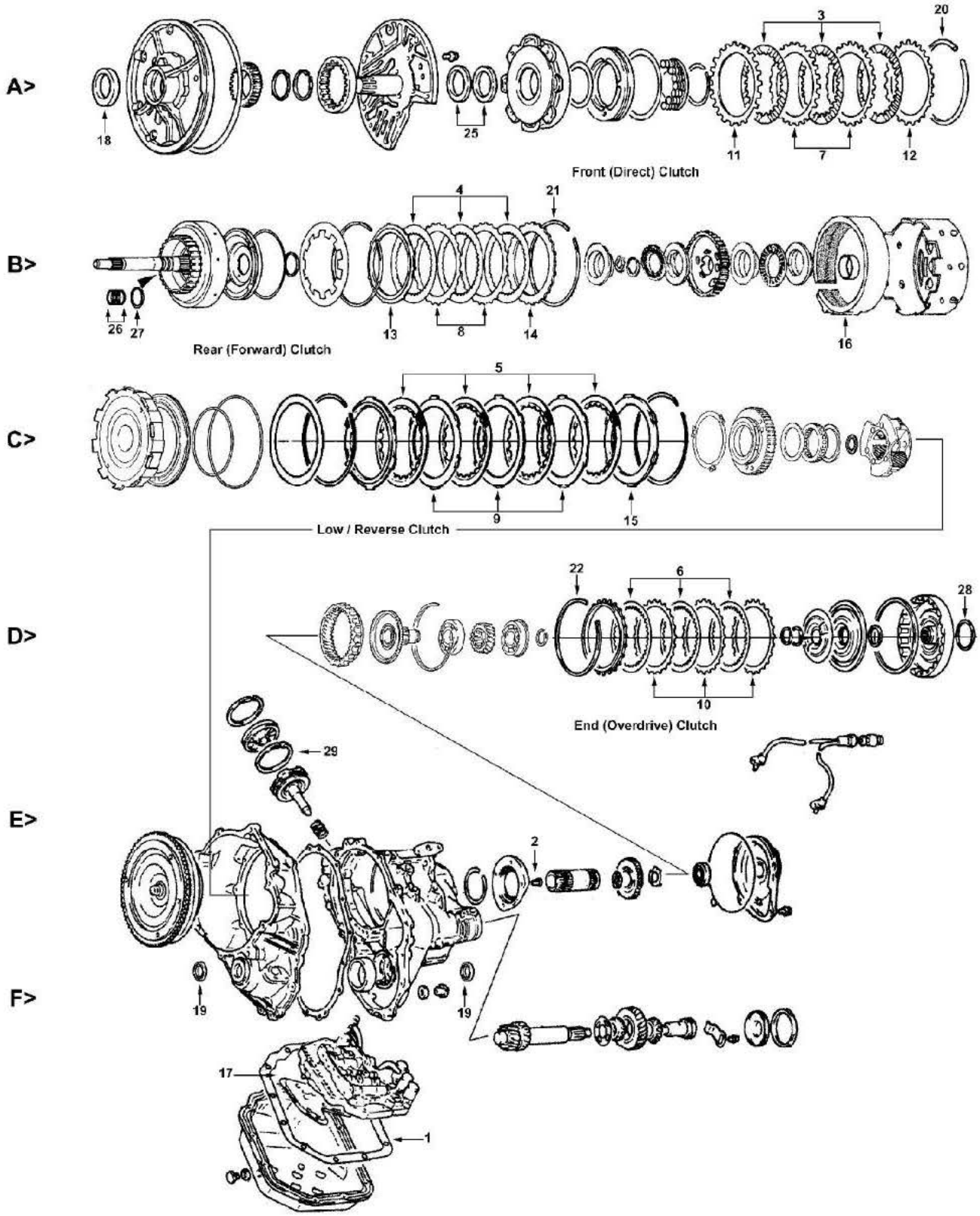

MITSUBISHI

MITSUBISHI, HYUNDAI, CHRYSLER
KM 3 & 4 SPEED 1979-On

KITS

*Add Suffix SK for Super Kit

ILL	Description	Years	Friction Module	Steel Module	Overhaul Kit	Banner Kit	Master Kit
KT	Rebuilding Kit - KM170, 171 3 Speed	79-84	059752A	NA	059802	059901LS	NA
KT	Rebuilding Kit - KM170, 171, 172 3 Speed	79-88	059752B	059753B	059802	059903LS	059903
KT	Rebuilding Kit - KM171, 172, F3A21, F3A22 3 Speed	89-On	059752G	059753G	059804	059913LS	059913
KT	Rebuilding Kit - KM175, 177 4 Speed	85-88	059752D	059753D	059802A	059907LS	059907
KT	Rebuilding Kit - KM177 4 Speed	87-88	059752E	059753E	059802A	059909LS	059909
KT	Rebuilding Kit - KM175-5, 176, 177-5,6,7/8, F4A21, F4A22, F4A23	89-On	059752H	059753H	059806	059915LS	059915
KT	Rebuilding Kit - KM175-5, 176, 177-5,6,7/8, F4A21, F4A22, F4A23 with Metal Gaskets	89-On	059752H	059753H	059806M	059915MLS	059915M
KT	Rebuilding Kit - W4A32 (AWD)	91-On	059752H	059753K	108802	059919LS	059919
KT	Rebuilding Kit - A4AF-1, F4A32-1 Hyundai	93-On	059752J	059753J	059806A	059917LS	059917
KT	Rebuilding Kit - A4AF-2, A4BF-1 Hyundai	96-On	059752L	059753L	059808	059917ALS	059917A
KT	Rebuilding Kit - A4AF-3, A4BF-3 Hyundai Accent	00-On	059752M	059753M	059808A	059917BLS	059917B
KT	Rebuilding Kit - A4BF-3 Hyundai Elantra	99-On	059752N	059753N	059808A	059917CLS	059917C

KITS - Specialty Kits - w/Anti Warp PowerPack®

ILL	Description	Years	Friction and Steel Module	Overhaul Kit	Banner Kit	Master Kit
KT	Rebuilding Kit - KM175, 177	85-88	059750DPWR	059802A	NA	059907PWR
KT	Rebuilding Kit - KM177 (only)	87-88	059750EPWR	059802A	NA	059909PWR
KT	Rebuilding Kit - Overdrive Clutch only	85-On	059757	059835	NA	059935PWR

MISCELLANEOUS GASKETS & KIT COMPONENTS

ILL	ALTO No.	REF No.	Description	Spec	Year	Qty	Notes
1F	059816	MD739235	Gasket, Oil pan except KM177, F4A23 (12 holes)	Cork/Rub	79-On	1	
1F	059816A	MD722527	Gasket, Oil pan KM177, F4A23 (13 holes)	Cork/Rub	85-On	1	
1F	059816B	45285-28010	Gasket, Oil pan A4AF-2, A4BF-1 A4BF-2, A4BF-3 Elantra, Tiburon (13 holes)	Cork/Rub	96-On	1	
1F	059816C	45285-22010	Gasket, Oil pan A4AF-1, A4AF-3	Cork/Rub	92-07	1	
2E	059315	MD734702	Bolt - End (overdrive) clutch retainer	M8 x 20	79-On	3-5	

FRICTION CLUTCHES

ILL	ALTO No.	REF No.	Description	Spec	Year	Qty	Notes
3A	059700	MD713655	Front (Direct) clutch - small ID	.075/1.9	79-88	2-3	HEG - 38T - OD: 4.996" - PL
3A	059710	MD737892	Front (Direct) clutch - large ID	.075/1.9	89-On	2-3	HEG - 38T - OD: 4.996" - PL
3A	059710A190	MD737892	Front (Direct) clutch - large ID	.075/1.9	89-On	2-3	Tan - 38T - OD: 4.996" - PL
4B	059702	MD714345	Rear (Forward) clutch (KM170, 171)	.075/1.9	79-84	2	Tan - 10T - OD: 4.996" - PL
4B	059700	MD713655	Rear (Forward) clutch (KM172) - small ID	.075/1.9	79-88	2-3	HEG - 38T - OD: 4.996" - PL
4B	059710	MD737892	Rear (Forward) clutch (All) - large ID	.075/1.9	89-On	2-3	HEG - 38T - OD: 4.996" - PL
4B	059710-170	45449-22770	Rear (Forward) clutch	.066/1.7	00-On	3	HEG - 38T - OD: 4.998" - PL
5C	059704	MD728108	Low/Reverse - all except KM177	.072/1.8	79-88	4-6	Tan - 48T - OD: 5.984" - PL
5C	059714	MD719833	Low/Reverse - KM177 & all others (89-On)	.072/1.8	87-On	6	HEG - 51T - OD: 5.997" - PL
6D	059706	MD739092	End (Overdrive)	.072/1.8	85-On	3-4	Tan - 40T - OD: 4.839" - PL
6D	059706A165	45560-22761	End (Overdrive)	.065/1.65	00-On	3-4	HEG - 36T - OD: 4.841" - PL

FRICTION CLUTCHES - HI-PERFORMANCE - Red Eagle®

ILL	ALTO No.	REF No.	Description	Spec	Year	Qty	Notes
6D	059746-150	NA	End (Overdrive) - PowerPack® Comp.	.059/1.5	85-On	AR	Red - 40T - OD: 4.839" - PL

MITSUBISHI

MITSUBISHI, HYUNDAI, CHRYSLER
KM 3 & 4 SPEED 1979-On

STEEL CLUTCHES

ILL	ALTO No.	REF No.	Description	Spec	Year	Qty	Notes
7A	059701	MD707256	Front (Direct) clutch	.150/3.8	79-88	3-4	24T - ID: 3.970"
7A	059731	MD722559	Front (Direct) clutch	.146/3.7	89-92	2-3	24T - ID: 4.117"
7A	059731-310	MD739509	Front (Direct) clutch	.122/3.1	93-On	2-3	24T - ID: 4.117"
8B	059703	MD707255	Rear (Forward) clutch	.071/1.8	79-88	2	24T - ID: 3.970"
8B	059733	MD722556	Rear (Forward) clutch	.071/1.8	89-On	2-3	24T - ID: 4.117"
8B	059733-200	45451-22700	Rear (Forward) clutch	.078/2.0	00-On	2-3	24T - ID: 4.117"
8B	059733-220	45451-28000	Rear (Forward) clutch - Elantra	.087/2.2	99-On	5	24T - ID: 4.117"
9C	059705	MD707401	Low / Reverse - KM170, 171	.071/1.8	79-81	3	6T - ID: 4.996"
9C	059707	MD707425	Low / Reverse - KM170, 171	.071/1.8	82-84	3	12T - ID: 4.996"
9C	059711	MD704948	Low / Reverse - KM171, 175	.039/1.0	84-88	5	24T - ID: 4.996"
9C	059721	MD715438	Low / Reverse - KM172	.071/1.8	85-88	3	24T - ID: 4.996"
9C	059715	MD719834	Low / Reverse - KM177	.039/1.0	87-88	5	24T - ID: 5.284"
9C	059725	MD727798	Low / Reverse - KM172, 175, 177	.039/1.0	89-On	5	20T - ID: 5.284"
9C	059725A	MD727799	Low / Reverse - KM171, 176, W4A32	.071/1.8	89-On	3-5	20T - ID: 5.284"
10D	059713	MD712528	Overdrive - except Hyundai	.032/.8	85-On	3-4	25T - ID: 4.162"
10D	059713-100	45561-37001	Overdrive - Hyundai only	.039/1.0	94-On	3	25T - ID: 4.162"
10D	059713A250	45561-28801	Overdrive - Elantra	.098/2.5	99-On	4	25T - ID: 3.773"
10D	059713A400	45561-22701	Overdrive	.156/4.0	00-On	3-4	25T - ID: 3.773"

STEEL CLUTCHES - HI-PERFORMANCE - Kolene®

ILL	ALTO No.	REF No.	Description	Spec	Year	Qty	Notes
10D	059713K120	NA	Overdrive - PowerPack® Component	.047/1.2	85-On	AR	Kol - 25T - ID: 4.162"
10D	059713K080	NA	Overdrive - PowerPack® Component	.032/.81	85-On	AR	Kol - 25T - ID: 4.162"

PRESSURE PLATES

ILL	ALTO No.	REF No.	Description	Spec	Year	Qty	Notes
11A	059731	MD722559	Front (Direct) - apply (KM177, F4A23)	.146/3.7	87-On	1	
12A	059760	MD727157	Front (Direct) - Top except KM177, F4A23	.146/3.7	79-88	1	stamped "S"
12A	059760A	MD722557	Front (Direct) - Top except KM177, F4A23	.150/3.8	89-On	1	stamped "R"
13B	TBA	MD707251	Rear (Forward) - apply with bevel		79-88	1	
13B	059761	MD732408	Rear (Forward) - apply with bevel	.200/5.1	89-On	1	
14B	059760	MD727157	Rear (Forward) - Top	.146/3.7	79-88	1	
14B	059760A	MD722557	Rear (Forward) - Top	.150/3.8	89-On	1	
15C	059709	MD707402	Low / Reverse - Top	.150/3.8	79-83	1	6T
15C	TBA	MD715148	Low / Reverse - Top	.146/3.7	84-88	1	24T
15C	TBA	MD727800	Low / Reverse - Top		89-93	1	20T
15C	TBA	MD736565	Low / Reverse - Top		93-On	1	20T

OEI® Original Equipment Improvements

ILL	ALTO No.	REF No.	Description	Spec	Year	Qty	Notes
KT	059757	NA	PowerPack® - Overdrive Anti-Warp kit		85-On	1	clutches only
KT	059985A	SK® KM175	Shift Kit®	Transgo®	85-On	1	

BANDS

ILL	ALTO No.	REF No.	Description	Spec	Year	Qty	Notes
16B	059950	MD707361	Kickdown - narrow (1.570")	Tan	79-On	1	
16B	059951	MD719933	Kickdown - wide (1.750")	Tan	87-On	1	

MITSUBISHI

MITSUBISHI, HYUNDAI, CHRYSLER
KM 3 & 4 SPEED 1979-On

FILTERS

ILL	ALTO No.	REF No.	Description	Spec	Year	Qty	Notes
17F	059940	MD707786	Filter		79-81	1	
17F	059942	MD707787	Filter		82-87	1	
17F	059946	MD737840	Filter - can replace 059944 (uses 4 bolts)		87-On	1	
17F	059946A	MD729954	Filter - .700" thick		87-92	1	
17F	059946B	46321-22040	Filter - F4A32 (uses 13 bolts)		93-97	1	
17F	059946C	46321-22731	Filter - A4BF3		00-On	1	
17F	059946D	46321-22050	Filter - A4AF2		96-On	1	
17F	059948	MD729955	Filter - .300" thick		82-96	1	
17F	059948A	MR515064	Filter - F1C1		01-On	1	
17F	108940	MD735572	Filter - W4A32		91-On	1	Metal/Plastic

METAL CLAD SEALS

ILL	ALTO No.	REF No.	Description	Spec	Year	Qty	Notes
18A	059400	MD707575	Front Pump		79-On	1	
19F	059401	MD707184	Axle		79-On	2	
N I	TBA	MD729745	Speedometer		79-On	1	
N I	059062	MD722531	End Clutch drum to shaft		85-89	1	
N I	059063	MD736847	End Clutch drum to shaft		90-On	1	

SEALING RINGS

ILL	ALTO No.	REF No.	Description	Spec	Year	Qty	Notes
KT	059601	G704	Sealing Ring Kit, 3 speed - 10M / 8T		79-88	1	
KT	059601A	G704D	Sealing Ring Kit, 3 speed - 5M / 11T		89-On	1	
KT	059602	G705Q	Sealing Ring Kit, 4 speed - 3M / 6T		85-88	1	
KT	059602A	G705J	Sealing Ring Kit, 4 speed - 2m / 8T		89-On	1	
25A	059103	MD707646	Front Pump stator	Metal	79-On	2	
25A	059113	MD713991	Front Pump stator	Teflon	79-On	2	
26B	059106	MD707236	Input Shaft - Front - 24mm	Metal	79-88	1-3	Except KM177
26B	059116	MD722551	Input Shaft - Front - 26mm	Teflon	87-On	3	KM177 (87-On)
27B	059107	MD707235	Input Shaft - Rear - 13mm	Metal	79-88	1	
27B	059117	NA	Input Shaft - Rear - 13mm	Teflon	79-88	1	
27B	059109	MD722639	Input Shaft - Rear - 35mm	Metal	87-On	1	
27B	059119	35712-30020	Input Shaft - Rear - 35mm	Teflon	87-On	1	
28B	059108	MD711875	End (Overdrive) Clutch retainer	Metal	85-On	1	
N I	059102	MD707520	Governor (3 speed)	Metal	79-On	3	
29E	059110	MD716881	Kickdown Servo, 3sp with 1.5L engine	Teflon	79-On	1	
29E	059111	MD715047	Kickdown Servo, 3sp with 1.6, 2.0L engine	Teflon	79-On	1	
29E	059112	MD727799	Kickdown Servo, 4sp with 78mm bore	Teflon	79-On	1	
29E	TBA	NA	Kickdown Servo, 4sp with 78mm bore	Rubber	79-On	1	
29E	TBA	MD722769	Kickdown Servo, 4sp with 83mm bore	Teflon	87-On	1	
29E	TBA	NA	Kickdown Servo, 4sp with 83mm bore	Rubber	87-On	1	
N I	059114	MD722278	Reverse Sun Gear	Teflon	87-On	1	
N I	059115	MD707204	Accumulator Piston - apply side	Metal	79-On	1	
N I	TBA	MD707202	Accumulator Piston - release side	Metal	79-On	1	

SNAP RINGS

ILL	ALTO No.	REF No.	Description	Spec	Year	Qty	Notes
N I	059251-130	NA	Overdrive	0.051/1.30	79-On	1	

MITSUBISHI

MITSUBISHI, HYUNDAI, CHRYSLER
KM 3 & 4 SPEED 1979-On

BUSHINGS

ILL	ALTO No.	REF No.	Description	Spec	Year	Qty	Notes
KT	TBA	NA	Bushing Kit - 3 speed (small powertrain)		79-88	1	Use 059627 Combo Kit
KT	059625A	NA	Bushing Kit - 3 speed (large powertrain)		82-88	1	
KT	059626	NA	Bushing Kit - 4 speed		85-88	1	
KT	059627	NA	Bushing Kit - All		89-On	1	
KT	059630	NA	Short Bushing Kit - 3 speed		79-On	1	
KT	059630A	NA	Short Bushing Kit - 4 speed		85-On	1	

BEARINGS

ILL	ALTO No.	REF No.	Description	Spec	Year	Qty	Notes
KT	059670	NA	Overdrive Bearing & Race Kit		99-On	1	

MITSUBISHI

MITSUBISHI, HYUNDAI, CHRYSLER
F4A33, F4A33EV, W4A33 1991-On

A>

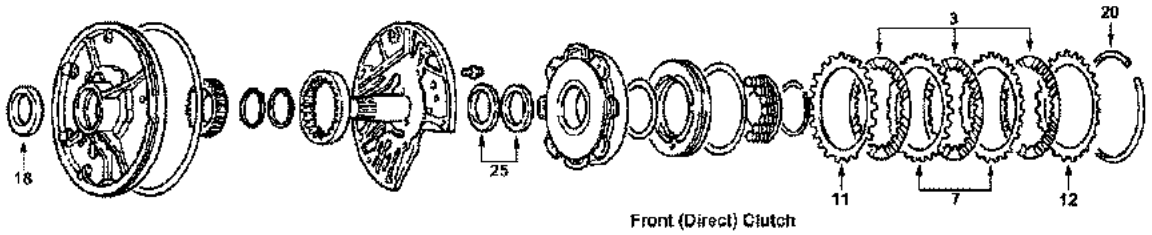

B>

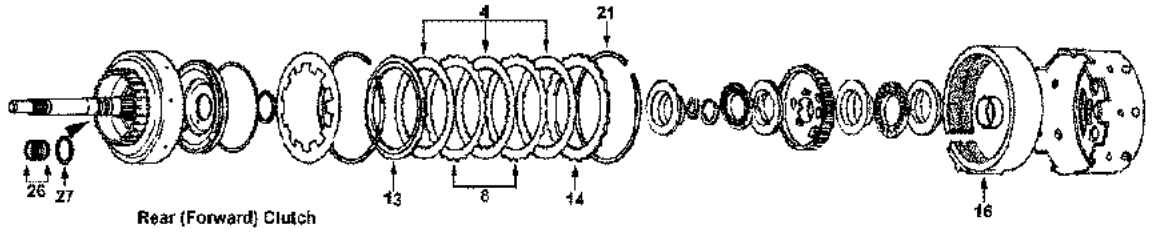

C>

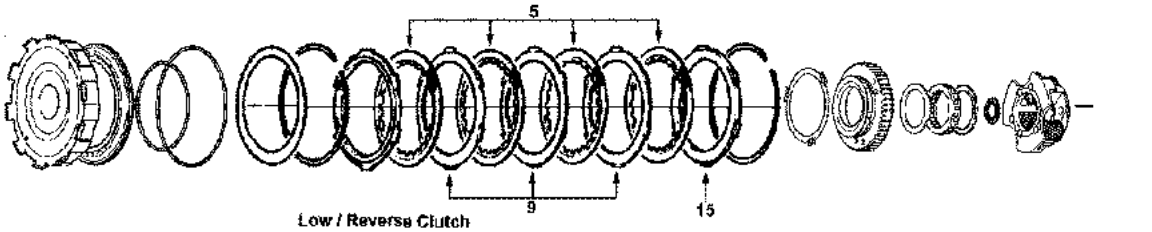

D>

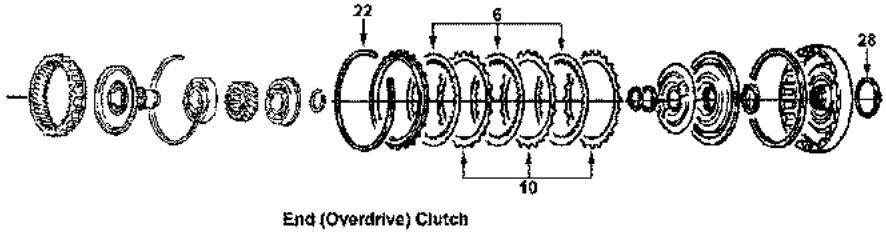

E>

F>

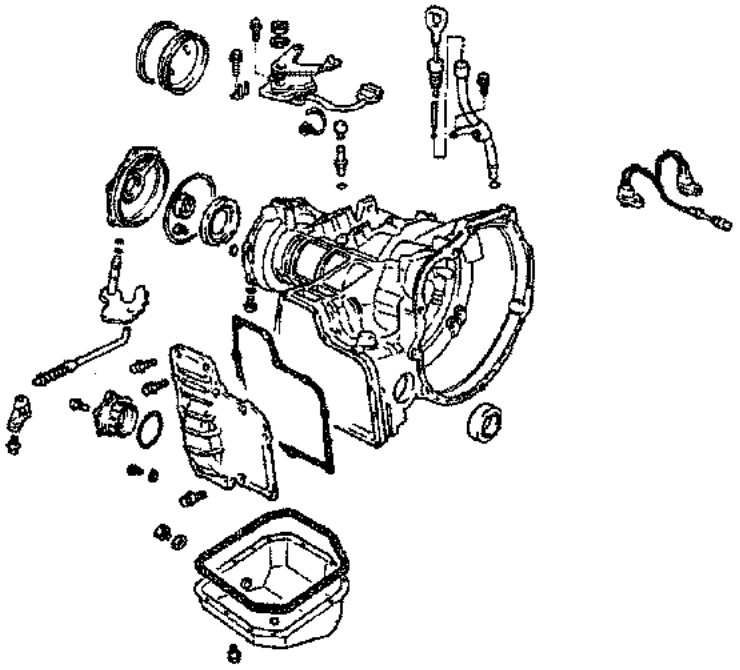

MITSUBISHI

MITSUBISHI, HYUNDAI, CHRYSLER
F4A33, F4A33EV, W4A33 1991-On

KITS

*Add Suffix SK for Super Kit

ILL	Description	Years	Friction Module	Steel Module	Overhaul Kit	Banner Kit	Master Kit
KT	Rebuilding Kit - F4A33 (2wd)	91-On	108752	108753	108800	108901LS	108901
KT	Rebuilding Kit - W4A33 (4wd)	91-On	108752	108753	108802	108903LS	108903

KITS - Specialty Hi-Performance Red Eagle® & Kolene®

ILL	Description	Years	Friction and Steel Module
KT	Module - Fricton/Steel - F4A33 (2wd), W4A33 (4wd)	91-On	108750HP

KITS - Specialty Hi-Perf w/Anti-Warp PowerPack®

ILL	Description	Years	Friction and Steel Module	Overhaul Kit	Banner Kit	Master Kit
KT	Rebuilding Kit - F4A33/W4A33 Overdrive Clutch only	91-On	059757	059835	NA	059935PWR

MISCELLANEOUS GASKETS & KIT COMPONENTS

ILL	ALTO No.	REF No.	Description	Spec	Year	Qty	Notes
1F	108816	MD739243	Gasket, Oil Pan	Cork/Rub	91-On	1	
2F	108818	MD739241	Gasket, Side Cover	Fiber	91-On	1	

FRICTION CLUTCHES

ILL	ALTO No.	REF No.	Description	Spec	Year	Qty	Notes
3A	108700	MD735828	Front (Direct) except F4A33EV	.067/1.7	91-On	4	HEG - 38T - OD: 5.430" - PL
4B	108702	MD731582	Rear (Forward) except F4A33EV	.067/1.7	91-On	5	HEG - 42T - OD: 5.430" - PL
5C	108704	MD731586	Low / Reverse - all	.067/1.7	91-On	5-6	HEG - 54T - OD: 6.205" - PL
6D	059706	MD739092	End (Overdrive) - all	.075/1.9	91-On	4	Tan - 40T - OD: 4.839" - PL

STEEL CLUTCHES

ILL	ALTO No.	REF No.	Description	Spec	Year	Qty	Notes
7A	108701	MD739384	Front (Direct) except F4A33EV	.088/2.2	91-On	3	26T - ID: 4.115 / OD: 5.693
7A	108701A	MD739570	Front (Direct) F4A33EV	.088/2.2	91-96	3	26T - ID: 4.115 / OD: 5.503
8B	108703	MD731604	Rear (Forward) except F4A33EV	.071/1.8	91-On	5	26T - ID: 4.363 / OD: 5.693
8B	108703A	MD738368	Rear (Forward) F4A33EV	.071/1.8	91-96	4-5	24T - ID: 4.363 / OD: 5.503
9C	108705	MD738587	Low / Reverse - all	.039/1.0	91-On	5-6	20T - ID: 5.540
9C	108705-200	NL	Low / Reverse - all	.079/2.0	91-On	AR	20T - ID: 5.540
10D	059713	MD712528	End (Overdrive)	.032/.8	91-On	3-4	25T - ID: 4.162"

PRESSURE PLATES

ILL	ALTO No.	REF No.	Description	Spec	Year	Qty	Notes
11A	108701-380	MD739385	Front (Direct) - apply	.150/3.8	91-On	1	

OEI® Original Equipment Improvements

ILL	ALTO No.	REF No.	Description	Spec	Year	Qty	Notes
KT	059757	NA	PowerPack® - Overdrive Anti-Warp Kit		91-On	1	Clutches only

BANDS

ILL	ALTO No.	REF No.	Description	Spec	Year	Qty	Notes
16B	108950	MD736920	Kickdown	Tan	91-On	1	

MITSUBISHI

MITSUBISHI, HYUNDAI, CHRYSLER
F4A33, F4A33EV, W4A33 1991-On

BANDS - HI-PERFORMANCE - Red Eagle®

ILL	ALTO No.	REF No.	Description	Spec	Year	Qty	Notes
16B	108960	NA	Kickdown	Red	91-On	1	Red Eagle®

FILTERS

ILL	ALTO No.	REF No.	Description	Spec	Year	Qty	Notes
17F	108940	MD735572	Filter		91-On	1	Metal/Plastic

METAL CLAD SEALS

ILL	ALTO No.	REF No.	Description	Spec	Year	Qty	Notes
18A	059400	MD707575	Front Pump		91-On	1	
19F	059401	MD707184	Axle - F4A33		91-92	2	
19F	059401A	MD742053	Axle - F4A33		93-On	2	
19F	108401	MD719710	Axle - W4A33 (Left)		91-On	1	
19F	059401	MD707184	Axle - W4A33 (Right)		91-On	1	
N I	059062	MD722531	End Clutch drum to shaft		91-On	1	
N I	059063	MD741303	End Clutch drum to shaft		93-On	1	MD736847
N I	TBA	MD731793	Drive Shaft rear - W4A33		91-On	1	
N I	TBA	MD701430	Extension Housing - W4A33		91-On	1	
N I	TBA	MB837030	Drive Gear shaft - W4A33		91-On	1	
N I	TBA	MD719710	Output Shaft - W4A33		91-On	1	

SEALING RINGS

ILL	ALTO No.	REF No.	Description	Spec	Year	Qty	Notes
KT	108600	G731B	Sealing Ring Kit - 2M / 9T		91-On	1	
25A	059113	MD713991	Front Pump stator	Teflon	91-On	2	
26B	059116	MD722551	Input Shaft - Front - 26mm	Teflon	91-On	3	
27B	059119	35712-30020	Input Shaft - Rear - 35mm	Teflon	91-On	1	
28B	059108	MD711875	End (Overdrive) Clutch retainer	Metal	91-On	1	
N I	108101	MD752527	Reverse Sun Gear	Metal	91-On	1	
29E	108102	MD731133	Kickdown Servo piston	Teflon	91-On	1	

MITSUBISHI

MITSUBISHI, HYUNDAI

F4A41, F4A42 1996-On, W4A42 2003-On, F4A4B 2007-On

KITS

*Add Suffix SK for Super Kit

ILL	Description	Years	Friction Module	Steel Module	Overhaul Kit	Banner Kit	Master Kit
KT	Rebuilding Kit - F4A41 only	96-On	123752	123753	123800	123901LS	123901
KT	Rebuilding Kit - F4A41 & F4A42 combo	96-On	123752A	123753A	123800	123901ALS	123901A
KT	Rebuilding Kit - W4A42 AWD	03-On	123752A	123753A	TBA	TBA	TBA

FRICTION CLUTCHES

ILL	ALTO No.	REF No.	Description	Spec	Year	Qty	Notes
N I	123700	Various	Underdrive - wave	.067/1.7	96-On	3-4	Tan - 30T - OD: 5.357" - PL
N I	123702	Various	2nd Brake (thick paper)	.067/1.7	96-On	2-3	Tan - 30T - OD: 6.183" - PL
N I	123704	Various	Reverse	.067/1.7	96-On	2	Tan - 30T - OD: 5.869" - PL
N I	123706	Various	Low / Reverse (thin paper)	.067/1.7	96-On	4-5	Tan - 30T - OD: 6.183" - PL
N I	123708	Various	Overdrive - wave	.067/1.7	96-On	3-4	Tan - 30T - OD: 5.357" - PL

STEEL CLUTCHES

ILL	ALTO No.	REF No.	Description	Spec	Year	Qty	Notes
N I	123701	Various	Underdrive	.071/1.8	96-On	3	20T - ID: 4.655"
N I	123703	Various	2nd Brake	.099-2.5	96-On	1	17T - ID: 5.127"
N I	123703-160	Various	2nd Brake - selective	.063/1.6	96-On	AR	17T - ID: 5.127"
N I	123703-200	Various	2nd Brake - selective	.079/2.0	96-On	AR	17T - ID: 5.127"
N I	123705	Various	Reverse	.071/1.8	96-On	2	20T - ID: 5.250"
N I	123705-200	Various	Reverse - selective	.078/2.0	96-On	AR	20T - ID: 5.250"
N I	123707	Various	Low / Reverse	.039/1.0	96-On	3-5	17T - ID: 5.541"
N I	123709	Various	Overdrive	.099/2.5	96-On	3	20T - ID: 4.655"

PRESSURE PLATES

ILL	ALTO No.	REF No.	Description	Spec	Year	Qty	Notes
N I	123760	NA	Underdrive	.161/4.1	96-On	1	
N I	123761	NA	2nd Brake	.099/2.5	96-On	1	

FILTERS

ILL	ALTO No.	REF No.	Description	Spec	Year	Qty	Notes
N I	123940	MD758691	Filter - Internal		96-On	1	Mirage, TE, Magna 4 cyl
N I	123941	MD752072	Filter - Spin On		96-On	1	
N I	124940B	46321-39010	Filter - Internal		96-On	1	

METAL CLAD SEALS

ILL	ALTO No.	REF No.	Description	Spec	Year	Qty	Notes
N I	059400	MD707575	Front Pump		96-On	1	
N I	123425	MD755526	Axle		96-On	1	MD755904

ELECTRONIC CONTROL COMPONENTS

ILL	ALTO No.	REF No.	Description	Spec	Year	Qty	Notes
N I	123503	MD758981	Solenoid OEM		96-On	1	
N I		46313-39051					

MITSUBISHI

F4A51, F5A51 (FWD)

1997-On

KITS

*Add Suffix SK for Super Kit

ILL	Description	Years	Friction Module	Steel Module	Overhaul Kit	Banner Kit	Master Kit
KT	Rebuilding Kit - F4A51 4 speed	97-On	124752	124753	124800	124901LS	124901
KT	Rebuilding Kit - F5A51 5 speed	99-00	124752A	124753A	124800A	124901ALS	124901A
KT	Rebuilding Kit - F5A51 5 speed	01-On	124752B	124753B	124800A	124901BLS	124901B
KT	Combo fits All F4A51/F5A51	97-On	124752A				
KT	Rebuilding Kit - F4A5A, W4A5A	04-On	124752	124753	124800	124901LS	124901

FRICTION CLUTCHES

ILL	ALTO No.	REF No.	Description	Spec	Year	Qty	Notes
N I	124700	Various	Underdrive - wave	.067/1.7	97-On	4	Tan - 30T - OD: 5.827" - PL
N I	124702	Various	2nd Brake (thick paper)	.067/1.7	97-On	4	Tan - 30T - OD: 7.030" - PL
N I	124704	Various	Reverse	.067/1.7	97-On	2	Tan - 30T - OD: 6.535" - PL
N I	124706	Various	Low / Reverse (thin paper) - 4 speed	.067/1.7	97-On	6	Tan - 30T - OD: 7.030" - PL
N I	124706	Various	Low / Reverse (thin paper) - 5 speed	.067/1.7	97-On	5	Tan - 30T - OD: 7.030" - PL
N I	124708	Various	Overdrive	.067/1.7	97-On	4	Tan - 30T - OD: 5.827" - PL
N I	124710-170	Various	Direct - 5 speed only	.067/1.7	99-On	3-5	HEG - 30T - OD: 4.800" - PL

STEEL CLUTCHES

ILL	ALTO No.	REF No.	Description	Spec	Year	Qty	Notes
N I	124701	45527-39500	Underdrive	.071/1.8	97-On	4	20T - ID: 4.850"
N I	124703	Various	2nd Brake	.099/2.5	97-On	2	16T - ID: 6.031"
N I	124703-390	Various	2nd Brake	.155/3.94	97-On	3	16T - ID: 6.031"
N I	124705	Various	Reverse	.071/1.8	97-On	2	20T - ID: 6.031"
N I	124707	45633-39500	Low / Reverse - 4 speed	.039/1.0	97-On	5	16T - ID: 6.294"
N I	124707	45633-39500	Low / Reverse - 5 speed	.039/1.0	97-On	4	16T - ID: 6.294"
N I	124709	45423-39700	Overdrive	.099/2.5	97-On	3	20T - ID: 4.850"
N I	124709-300	Various	Overdrive	.118/3.0	01-On	3-4	20T - ID: 4.850"
N I	124711-250	Various	Direct - 5 speed only	.099/2.5	99-00	3-4	20T - ID: 3.470"

SPRING- WAVE, BELLEVILLE, FINGER

ILL	ALTO No.	REF No.	Description	Spec	Year	Qty	Notes
N I	124769W	2741A007	Low Rev Wave Spring	.138/3.51	97-On	1	

PRESSURE PLATES

ILL	ALTO No.	REF No.	Description	Spec	Year	Qty	Notes
N I	124760	NA	Underdrive	.157/4.0	97-On	1	
N I	124761	MD760331	2nd Brake Top - stepped	.099/2.5	97-On	AR	
N I	124762-160	MD759568F	2nd Brake	.063/1.6	97-On	AR	
N I	124762-180	MD759425E	2nd Brake	.071/1.8	97-On	AR	
N I	124762-200	MD759426D	2nd Brake	.078/2.0	97-On	AR	
N I	124762-220	MD759427C	2nd Brake	.087/2.2	97-On	AR	
N I	124762-240	MD759428B	2nd Brake	.094/2.4	97-On	AR	
N I	124762-260	MD759429A	2nd Brake	.102/2.6	97-On	AR	
N I	124762-280	MD759430O	2nd Brake	.110/2.8	97-On	AR	
N I	124762-300	MD759431I	2nd Brake	.118/3.0	97-On	AR	
N I	124763-590	NA	Low / Reverse	.232/5.9	97-On	1	
N I	124764A	NA	Overdrive - Apply	.157/4.0	97-On	1	
N I	124764B	NA	Overdrive - Reaction	.236/6.0	97-On	1	
N I	124761-400	NA	Direct - F5A51	.158/4.0	97-On	AR	

MITSUBISHI

F4A51, F5A51 (FWD)

1997-On

FILTERS

ILL	ALTO No.	REF No.	Description	Spec	Year	Qty	Notes
N I	124940	MD758684	Filter - F4A51, F5A51		97-On	1	Diamante 3.5 96-99
N I	124940B	46321-39010	Filter - F4A51, F5A51		97-On	1	Hyundai Sonata 2.0 99-on
N I	124940C	MR350441	Filter - F4A51, F5A51		99-On	1	internal plastic
N I	123941	MD752072	Filter - Spin On		97-On	1	

METAL CLAD SEALS

ILL	ALTO No.	REF No.	Description	Spec	Year	Qty	Notes
N I	059400	MD707575	Front Pump		97-On	1	
N I	123425	MD755526	Axle		97-On	1	MD755904

ELECTRONIC CONTROL COMPONENTS

ILL	ALTO No.	REF No.	Description	Spec	Year	Qty	Notes
N I	123503	MD758981	Solenoid OEM		97-On	1	
N I		46313-39051					

MITSUBISHI

F5AH1 (RM-45)

2001-On

KITS

*Add Suffix SK for Super Kit

ILL	Description	Years	Friction Module	Steel Module	Overhaul Kit	Banner Kit	Master Kit
KT	Rebuilding Kit	01-On	165752	165753	165800	165901LS	165901

FRICTION CLUTCHES

ILL	ALTO No.	REF No.	Description	Spec	Year	Qty	Notes
N I	165700-170	45524-39800kit	Underdrive	.067/1.7	01-On	4	HEG - 30T
N I	165702-170	45444-39800kit	Reverse	.067/1.7	01-On	2	HEG - 30T
N I	165704-170	45561-39810kit	Direct	.067/1.7	01-On	4	HEG - 30T
N I	165706-170	45631-39800kit	Brake	.067/1.7	01-On	7	HEG - 30T
N I	165706A170	45624-39800kit	2nd Brake	.067/1.7	01-On	5	HEG - 30T
N I	165700-170	45524-39800kit	Overdrive	.067/1.7	01-On	5	HEG - 30T

STEEL CLUTCHES

ILL	ALTO No.	REF No.	Description	Spec	Year	Qty	Notes
N I	165701-180	45524-39800kit	Underdrive	.070/1.8	01-On	4	20T - ID: 5.090"
N I	165703-180	45444-39800kit	Reverse	.070/1.8	01-On	2	20T - ID: 6.332"
N I	165705-400	45561-39810kit	Direct	.157/4.0	01-On	4	20T - ID: 3.593"
N I	165707-107	45631-39800kit	Brake	.042/1.07	01-On	6	16T - ID: 6.530"
N I	165709-360	45624-39800kit	2nd Brake	.143/3.6	01-On	4	16T
N I	165701-300	45421-39800kit	Overdrive	.118/3.0	01-On	5	20T - ID: 5.090"

PRESSURE PLATES

ILL	ALTO No.	REF No.	Description	Spec	Year	Qty	Notes
N I	TBA	45524-39800kit	Underdrive	.157/4.0	01-On	1	
N I	TBA	45444-39800kit	Reverse	.157/4.0	01-On	1	
N I	TBA	45561-39800kit	Direct with step		01-On	1	
N I	TBA	45624-39800kit	2nd Brake with step		01-On	1	
N I	TBA	TBA	Overdrive		01-On	1	

FILTERS

ILL	ALTO No.	REF No.	Description	Spec	Year	Qty	Notes
N I	165940	31728-AA130	Filter		01-On	1	

MITSUBISHI

R4A51, V4A51, R5A51, V5A51 (RWD)

1997-On

KITS

*Add Suffix SK for Super Kit

ILL	Description	Years	Friction Module	Steel Module	Overhaul Kit	Banner Kit	Master Kit
KT	Rebuilding Kit R4A51, V4A51 4 speed	97-On	124752	124753	124802	124903LS	124903
KT	Rebuilding Kit R5A51, V5A51 5 speed	99-On	124752A	124753A	124802	124903ALS	124903A
KT	Module-Friction/Steel - Combo fits All R4A51,V4A51,R5A51, V5A51	97-On	124752A				

MISCELLANEOUS GASKETS & KIT COMPONENTS

ILL	ALTO No.	REF No.	Description	Spec	Year	Qty	Notes
N I	124816A	NA	Gasket, Oil Pan	Cork/Rub	97-On	1	

FRICTION CLUTCHES

ILL	ALTO No.	REF No.	Description	Spec	Year	Qty	Notes
N I	124700	Various	Underdrive - 10 waves	.067/1.7	97-On	4	Tan - 30T - OD: 5.827" - PL
N I	124702	Various	2nd Brake (thick paper)	.067/1.7	97-On	4	Tan - 30T - OD: 7.030" - PL
N I	124704	Various	Reverse	.067/1.7	97-On	2	Tan - 30T - OD: 6.535" - PL
N I	124706	Various	Low / Reverse (thin paper) - 4 speed	.067/1.7	97-On	6	Tan - 30T - OD: 7.030" - PL
N I	124706	Various	Low / Reverse (thin paper) - 5 speed	.067/1.7	99-On	5	Tan - 30T - OD: 7.030" - PL
N I	124708	Various	Overdrive - 6 waves	.067/1.7	97-On	4	Tan - 30T - OD: 5.827" - PL
N I	124710-170	Various	Direct - 5 speed only	.067/1.7	99-On	3-5	HEG - 30T - OD: 4.800" - PL

STEEL CLUTCHES

ILL	ALTO No.	REF No.	Description	Spec	Year	Qty	Notes
N I	124701	Various	Underdrive	.071/1.8	97-On	4	20T - ID: 4.850"
N I	124703-390	Various	2nd Brake	.155/3.94	97-On	3	16T - ID: 6.031"
N I	124705	Various	Reverse	.071/1.8	97-On	2	20T - ID: 6.031"
N I	124707	Various	Low / Reverse - 4 speed	.039/1.0	97-On	5	16T - ID: 6.294"
N I	124707	Various	Low / Reverse - 5 speed	.039/1.0	99-On	4	16T - ID: 6.294"
N I	124709	Various	Overdrive	.099/2.5	97-On	3	20T - ID: 4.850"
N I	124703	Various	Direct - 5 speed only	.099/2.5	99-On	3-4	20T - ID: 3.470"
N I	124711-400	Various	Direct - 5 speed only	.102/4.0	99-On	AR	20T - ID: 3.470"

PRESSURE PLATES

ILL	ALTO No.	REF No.	Description	Spec	Year	Qty	Notes
N I	124760	NA	Underdrive	.157/4.0	97-On	1	
N I	124762A390	NA	2nd Brake - Bottom	.153/3.9	97-On	3	
N I	TBA	MR246249	2nd Brake - Bottom	.233/5.9	97-On	AR	
N I	124703	NA	2nd Brake - Apply	.099/2.5	99-On	1	
N I	124762-160	MR336390	2nd Brake & Reverse - apply	.063/1.6	97-On	AR	
N I	124762-180	MR336391	2nd Brake & Reverse - apply	.071/1.8	97-On	AR	
N I	124762-200	MR336392	2nd Brake & Reverse - apply	.078/2.0	97-On	AR	
N I	124762-220	MR336393	2nd Brake & Reverse - apply	.087/2.2	97-On	AR	
N I	124762-240	MR336394	2nd Brake & Reverse - apply	.094/2.4	97-On	AR	
N I	124762-260	MR336395	2nd Brake & Reverse - apply	.102/2.6	97-On	AR	
N I	124762-280	MR336396	2nd Brake & Reverse - apply	.110/2.8	97-On	AR	
N I	124762-300	MR336397	2nd Brake & Reverse - apply	.118/3.0	97-On	AR	
N I	124764B	NA	Overdrive - Reaction	.236/6.0	97-On	1	
N I	124764C	NA	Overdrive - V4A51	.130/3.3	97-On	AR	

BANDS

ILL	ALTO No.	REF No.	Description	Spec	Year	Qty	Notes
N I	124950	MD762016	Brake	Tan	97-On	1	

MITSUBISHI

R4A51, V4A51, R5A51, V5A51 (RWD)

1997-On

FILTERS

ILL	ALTO No.	REF No.	Description	Spec	Year	Qty	Notes
N I	124942	MR357710	Filter- wo/PU Tube, Shallow Pan		97-On	1	
N I	124942A	MR528836	Filter - w/PU, Deep Pan - Late		97-On	1	

METAL CLAD SEALS

ILL	ALTO No.	REF No.	Description	Spec	Year	Qty	Notes
N I	059400	MD707575	Front Pump		97-On	1	
N I	124406	MR446308	Extension Housing - R4A51		97-On	1	
N I	124405	MR350599	Adapter Housing - V4A51		97-On	1	
N I	TBA	MR145792	Transfer Case - input		97-On	1	
N I	TBA	MD731708	Transfer Case - Front Output		97-On	1	
N I	TBA	MB919210	Transfer Case - Rear Output		97-On	1	

NISSAN

3N71B, L3N71B
1971-87

A>

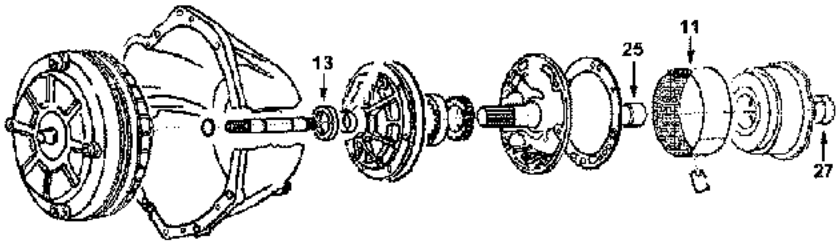

B>

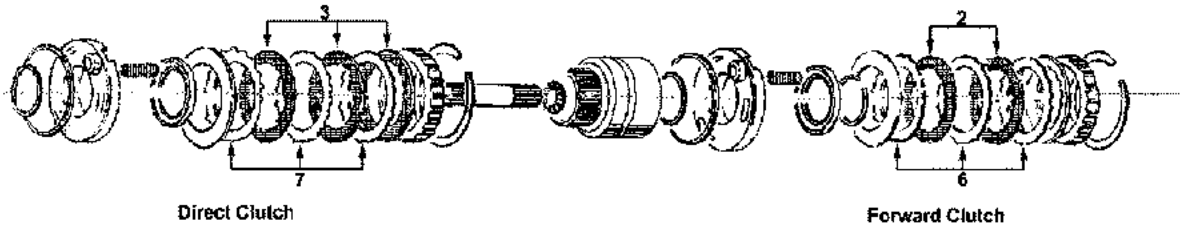

C>

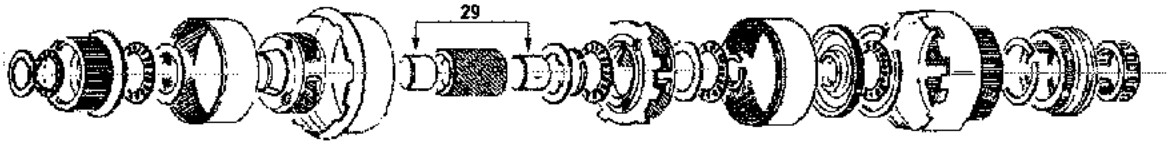

D>

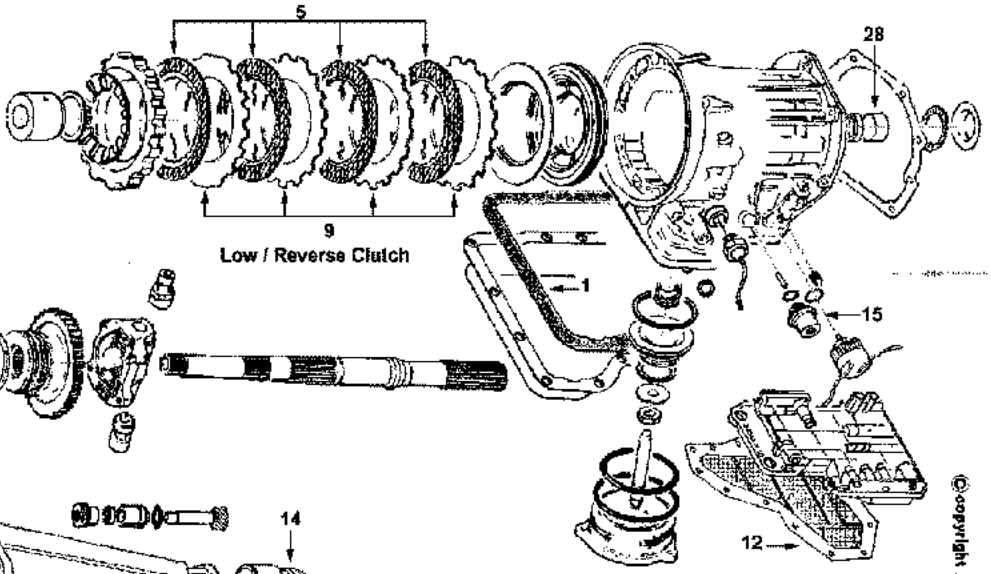

E>

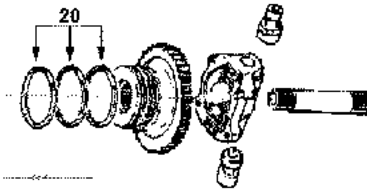

F>

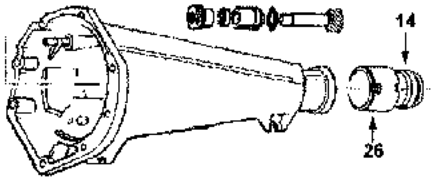

NISSAN

3N71B, L3N71B

1971-87

KITS

*Add Suffix SK for Super Kit

ILL	Description	Years	Friction Module	Steel Module	Overhaul Kit	Banner Kit	Master Kit
KT	Rebuilding Kit - Jatco (internal servo) ony	71-87	042752A	042753	042800	042901LS	042901
KT	Rebuilding Kit - Combo Jatco & Ford	71-87	042752J	042753J	042800A	042903LS	042903

MISCELLANEOUS GASKETS & KIT COMPONENTS

ILL	ALTO No.	REF No.	Description	Spec	Year	Qty	Notes
1E	042816	31397-X0102	Gasket, Oil pan - internal servo	Cork/Rub	71-87	1	
1E	042818	D7DZ-7A191A	Gasket, Oil pan - external servo	Cork/Rub	71-81	1	

FRICTION CLUTCHES

ILL	ALTO No.	REF No.	Description	Spec	Year	Qty	Notes
2B	042700	31532-X8000	Rear (Forward)	.061/1.6	71-87	3-6	Tan - 44T - OD: 4.530" - WF
3B	042700	31532-X8000	Front (Direct)	.061/1.6	71-87	3-5	Tan - 44T - OD: 4.530" - WF
5D	042702	31662-X8175	Low / Reverse	.075/1.9	71-87	4-8	Tan - 51T - OD: 5.117" - WF

STEEL CLUTCHES

ILL	ALTO No.	REF No.	Description	Spec	Year	Qty	Notes
6B	042701	31536-X0101	Rear (Forward)	.078/2.0	71-87	3-5	28T - ID: 3.625"
6B	063701	31536-X5001	Rear (Forward) - some models	.063/1.6	71-87	6	28T - ID: 3.625"
7B	042701	31536-X0101	Front (Direct)	.078/2.0	71-87	3-5	28T - ID: 3.625"
6B	042701A	NA	Forward & Direct - selective	.032/.8	71-87	AR	28T - ID: 3.625"
9D	042703	31666-X0101	Low / Reverse	.078/2.0	71-87	4-7	13T - ID: 4.212"

BANDS

ILL	ALTO No.	REF No.	Description	Spec	Year	Qty	Notes
11A	042950	31630-X0100	Brake - Rigid	Tan	71-87	1	
11A	042951	31630-X0103	Brake - Flex	Tan	71-87	1	

FILTERS

ILL	ALTO No.	REF No.	Description	Spec	Year	Qty	Notes
12F	042940	31728-X0900	Filter - External Servo (Jatco)		71-87	1	
12F	042942	D7DZ-7A098B	Filter - Internal Servo (Ford)		71-81	1	

METAL CLAD SEALS

ILL	ALTO No.	REF No.	Description	Spec	Year	Qty	Notes
13A	042400	31344-X6901	Front Pump		71-87	1	
14F	042404	31336-X0101	Extension Housing - Jatco (Nissan)	1.976	71-87	1	
14F	042405	0437-17-335A	Extension Housing - Jatco (Mazda)	1.896	74-83	1	
14F	023405	E2DZ-7052A	Extension Housing - Ford	2.381	71-81	1	with Boot
14F	032402	NA	Extension Housing - Ford	2.381	71-81	1	without Boot
N I	042420	31336-X6901	Adapter Housing (4x4)	2.455	71-87	1	
N I	042410	32709-14600	Speedometer - Nissan (.150 thick)	.637	71-86	1	
N I	042410A	32709-58S00	Speedometer - Nissan (.200 thick)	.637	87	1	
N I	042411	9958-60-8166	Speedometer - Mazda (.235 thick)	.640	74-83	1	

NISSAN

3N71B, L3N71B

1971-87

SEALING RINGS

ILL	ALTO No.	REF No.	Description	Spec	Year	Qty	Notes
KT	042600	E501	Sealing Ring Kit - 7M		71-87	1	
N I	042100	31361-X0100	Front Pump stator (Direct Drum)	1.732	71-87	2	
N I	042101	31362-X0100	Front Pump stator (Forward Drum)	1.693	71-87	2	
20E	042102	31487-X0100	Governor		71-87	3	

BUSHINGS

ILL	ALTO No.	REF No.	Description	Spec	Year	Qty	Notes
KT	042625	NA	Bushing Kit		71-87	1	
25A	042201	31341-X0100	Front Pump		71-87	1	
26F	042203	31332-X0100	Extension Housing - Jatco		71-87	1	
26F	042203A	B3TZ-7A034A	Extension Housing - Ford		71-81	1	
N I	042204	31353-X0101	Stator Support		71-87	2	
27A	042205	31513-X0100	Front (Direct) Drum		71-87	1	
28D	042207	NA	Case		71-87	1	
29C	042208	31462-X0101	Sun Gear		71-87	2	

WASHERS

ILL	ALTO No.	REF No.	Description	Spec	Year	Qty	Notes
KT	042635	NA	Washer Kit		71-87	1	

MODULATORS

ILL	ALTO No.	REF No.	Description	Spec	Year	Qty	Notes
15E	042500	31931-X0102	.84" Diaphram		71-87	1	
15E	042501	31931-X0110	.91" Diaphram		71-87	1	

NISSAN

E4N71B, L4N71B

1983-93

KITS

*Add Suffix SK for Super Kit

ILL	Description	Years	Friction Module	Steel Module	Overhaul Kit	Banner Kit	Master Kit
KT	Rebuilding Kit	83-85	042752H	042753H	042802	042909LS	042909
KT	Rebuilding Kit	1986	042752K	042753K	042802	042909ALS	042909A
KT	Rebuilding Kit	87-93	042752L	042753L	042802	042909BLS	042909B

MISCELLANEOUS GASKETS & KIT COMPONENTS

ILL	ALTO No.	REF No.	Description	Spec	Year	Qty	Notes
1F	042816	31397-X0102	Gasket, Oil Pan	Cork/Rub	83-93	1	

FRICTION CLUTCHES

ILL	ALTO No.	REF No.	Description	Spec	Year	Qty	Notes
2C	042700	31532-X8000	Forward	.061/1.55	83-93	3-6	Tan - 44T - OD: 4.530" - WF
3C	042700	31532-X8000	Direct	.061/1.55	83-93	3-5	Tan - 44T - OD: 4.530" - WF
4B	042700	31532-X8000	Overdrive	.061/1.55	83-93	2-4	Tan - 44T - OD: 4.530" - WF
5E	042702	31662-X8175	Low / Reverse	.075/1.9	83-93	4-8	Tan - 51T - OD: 5.117" - WF

FRICTION CLUTCHES - HI-PERFORMANCE - Red Eagle®

ILL	ALTO No.	REF No.	Description	Spec	Year	Qty	Notes
AR	042740	NA	Forward, Direct, & Overdrive	.061/1.55	83-93	AR	Red - 44T - OD: 4.530" - SM

STEEL CLUTCHES

ILL	ALTO No.	REF No.	Description	Spec	Year	Qty	Notes
6C	042701	31536-X0101	Forward	.078/2.0	83-86	6	28T - ID: 3.625"
6C	063701	31536-X5001	Forward	.063/1.6	87-93	6	28T - ID: 3.625"
7C	042701	31536-X0101	Direct	.078/2.0	83-93	3-5	28T - ID: 3.625"
8B	042701	31536-X0101	Overdrive	.078/2.0	83-86	2	28T - ID: 3.625"
8B	063701	31536-X5001	Overdrive	.063/1.6	87-93	2	28T - ID: 3.625"
AR	042701A	NA	Forward, Direct & Overdrive - selective	.032/.8	83-93	AR	28T - ID: 3.625"
9E	042703	0338-19-609	Low & Reverse	.078/2.0	83-93	4-7	13T - ID: 4.212"

BANDS

ILL	ALTO No.	REF No.	Description	Spec	Year	Qty	Notes
10B	042951	31630-X0110	Overdrive Brake	Tan	83-93	1	
11B	042951	31630-X0110	Intermediate Brake	Tan	83-93	1	

FILTERS (add Prefix FK for FILTER KIT)

ILL	ALTO No.	REF No.	Description	Spec	Year	Qty	Notes
12F	042944	31728-X8600	Filter		83-93	1	

METAL CLAD SEALS

ILL	ALTO No.	REF No.	Description	Spec	Year	Qty	Notes
13A	042400	31344-X6901	Front Pump		83-93	1	
14F	042407	31336-X8000	Extension Housing	1.980	83-93	1	
N I	042410	32709-14600	Speedometer - Nissan (.150 thick)	.637	83-86	1	
N I	042410A	32709-58S00	Speedometer - Nissan (.200 thick)	.637	87-93	1	

SEALING RINGS

ILL	ALTO No.	REF No.	Description	Spec	Year	Qty	Notes
KT	042601	E505B	Sealing Ring Kit - 9M / 3T		86-97	1	
N I	042100	31361-X0100	Front Pump stator (Direct Drum)	1.732	83-93	2	Metal

NISSAN
E4N71B, L4N71B
1983-93

SEALING RINGS

ILL	ALTO No.	REF No.	Description	Spec	Year	Qty	Notes
N I	042110	31361-X8600	Front Pump stator (Direct Drum)	1.732	83-93	2	Teflon
N I	042101	31362-X0100	Front Pump stator (Forward Drum)	1.693	83-93	2	Metal
N I	042111	31362-X8600	Front Pump stator (Forward Drum)	1.693	83-93	2	Teflon
21B	042100	31361-X0100	Overdrive stator (Overdrive Drum)	1.732	83-93	2	Metal
21B	042110	31361-X8600	Overdrive stator (Overdrive Drum)	1.732	83-93	2	Teflon
20E	042102	31487-X0100	Governor		83-93	3	Metal
20E	042112	31487-X8000	Governor		83-93	3	Teflon
22B	042113	31672-X8600	Overdrive Accumulator - Release		83-93	1	Teflon
23B	042114	31673-X8610	Overdrive Accumulator - Apply		83-93	1	Teflon
22B	042114A	31673-X8682	Overdrive Accumulator - Apply		83-93	1	Teflon - .25" gap

BUSHINGS

ILL	ALTO No.	REF No.	Description	Spec	Year	Qty	Notes
KT	042626	NA	Kit		83-93	1	
25A	042201	31341-X0100	Front Pump		83-93	1	
N I	TBA	31532-X6100	Stator Shaft - Front		83-93	1	
30A	TBA	31354-X8600	Stator Shaft - Rear		83-93	1	
N I	TBA	31353-X6100	Stator Shaft - Center		83-93	1	
27A	042205	31513-X0100	Front (Direct) Drum		83-93	1	
28D	042207	31373-X0101	Case - wide		83-93	1	
31D	042207A	31375-X0101	Case - narrow		83-93	1	
29C	042208A	31462-X6100	Sun Gear		83-93	2	
26F	042203B	31332-X8000	Extension Housing		83-93	1	
N I	042210	31503-X8601	Overdrive Drum		83-93	1	
32A	042211	31592-X8600	Overdrive Sun Gear	1.35	83-93	2	
32A	042211A	31592-X9000	Overdrive Sun Gear	1.26	83-93	2	

WASHERS

ILL	ALTO No.	REF No.	Description	Spec	Year	Qty	Notes
KT	042636	NA	Washer Kit		83-93	1	

MODULATORS

ILL	ALTO No.	REF No.	Description	Spec	Year	Qty	Notes
15E	042500	31931-X0102	.84" Diaphram		83-93	1	
15E	042501	31931-X0110	.91" Diaphram		83-93	1	

NISSAN

RE4R01A, RL4R01A

1988-On

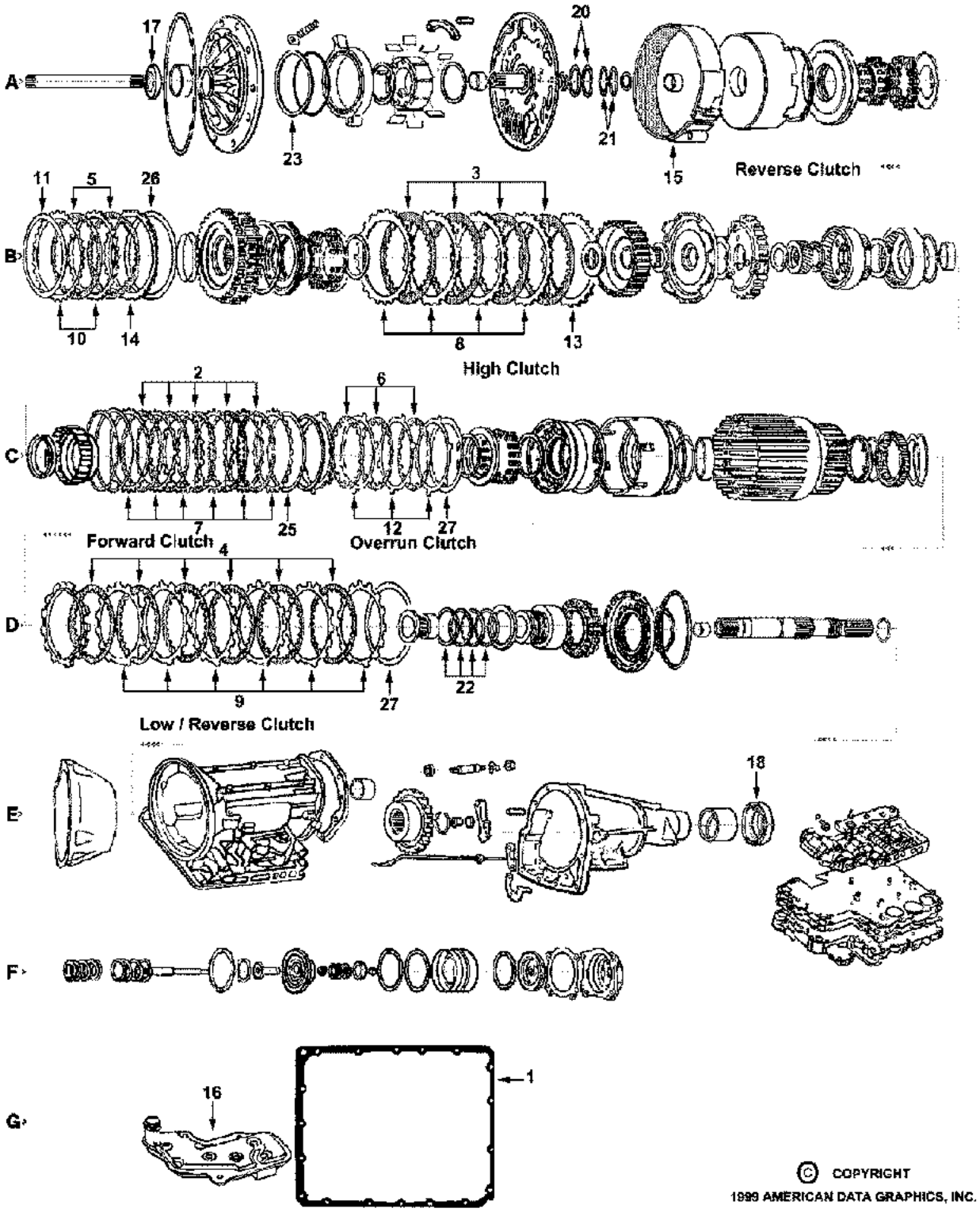

NISSAN

RE4R01A, RL4R01A

1988-On

KITS

*Add Suffix SK for Super Kit

ILL	Description	Years	Friction Module	Steel Module	Overhaul Kit	Banner Kit	Master Kit
KT	Rebuilding Kit - NISSAN PATHFINDER 4WD	88-89	075752	075753	075800	075901LS	075901
KT	Rebuilding Kit - NISSAN PATHFINDER 4WD	90-92	075752H	075753L	075800	075901CLS	075901CX
KT	Rebuilding Kit - NISSAN PATHFINDER 4WD	93-95	075752N	075753Q	075800	075901ELS	075901E
KT	Rebuilding Kit - NISSAN PATHFINDER 2WD	90-94	075752D	075753J	075800	075901DLS	075901D
KT	Rebuilding Kit - NISSAN PATHFINDER 2WD	1995	075752N	075753Q	075800	075901ELS	075901E
KT	Rebuilding Kit - NISSAN PATHFINDER All	96-On	075752R	075753Q	075800	075901GLS	075901G
KT	Rebuilding Kit - NISSAN PICKUP 4WD	88-91	075752	075753	075800	075901LS	075901
KT	Rebuilding Kit - NISSAN PICKUP 4WD	88-92	075752H	075753L	075800	075901CLS	075901CX
KT	Rebuilding Kit - NISSAN PICKUP 4WD	93-96	075752N	075753Q	075800	075901ELS	075901E
KT	Rebuilding Kit - NISSAN PICKUP 2WD V6	90-96	075752D	075753J	075800	075901DLS	075901D
KT	Rebuilding Kit - NISSAN PICKUP 2wd 4cyl. (RL4R01A)	90-92	075752K	075753K	075800	075909LS	075909
KT	Rebuilding Kit - NISSAN PICKUP 2WD 4 cyl. (RL4R01A)	93-95	075752D	075753J	075800	075901DLS	075901D
KT	Rebuilding Kit - NISSAN PICKUP 2WD 4 cyl. (RL4R01A)	96-On	075752R	075753Q	075800	075901GLS	075901G
KT	Rebuilding Kit - FRONTIER All (RL4R01A)	98-On	075752R	075753Q	075800	075901GLS	075901G
KT	Rebuilding Kit - NISSAN XTERRA	00-On	075752R	075753Q	075800	075901GLS	075901G
KT	Rebuilding Kit - NISSAN VAN	1989	075752D	075753J	075800	075901DLS	075901D
KT	Rebuilding Kit - NISSAN 240SX	89-92	075752B	075753B	075800	075901ALS	075901A
KT	Rebuilding Kit - NISSAN 240SX	89-95	075752Q	075753M	075800	075901DXLS	075901DX
KT	Rebuilding Kit - NISSAN 240SX	1996	075752P	TBA	075800	TBA	TBA
KT	Rebuilding Kit - NISSAN 240SX	97-On	075752R	TBA	075800	075901GLS	075901G
KT	Rebuilding Kit - NISSAN 300ZX Non-Turbo	89-92	075752H	075753L	075800	075901CLS	075901CX
KT	Rebuilding Kit - NISSAN 300ZX Non-Turbo	93-97	075752N	075753Q	075800	075901ELS	075901E
KT	Rebuilding Kit - INFINITI J30	1992	075752H	075753H	075800	075901CLS	075901C
KT	Rebuilding Kit - INFINITI J30	93-95	075752N	075753Q	075800	075901ELS	075901E
KT	Rebuilding Kit - INFINITI J30	96-On	075752R	075753Q	075800	075901GLS	075901G
KT	Rebuilding Kit - INFINITI M30	90-91	075752B	075753B	075800	075901ALS	075901A
KT	Rebuilding Kit - INFINITI QX4	97-On	075752R	075753Q	075800	075901GLS	075901G
KT	COMBO : 4WD Truck and Turbo fits:		075752H	075753L	075800	075901CLS	075901CX
	Pathfinder 4wd	90-92					
	Pickup 4wd	88-92					
	300ZX	89-92					
	Infiniti J30	1992					
KT	COMBO : 2WD Truck and 240SX fits:		075752Q	075753M	075800	075901DXLS	075901DX
	240SX	89-95					
	Pickup 2wd 4cyl. (RL4R01A)	92-On					
	Pickup 2wd V6	90-96					
	Pathfinder 2wd	90-95					

MISCELLANEOUS GASKETS & KIT COMPONENTS

ILL	ALTO No.	REF No.	Description	Spec	Year	Qty	Notes
1G	075816	31397-41X05	Gasket, Oil Pan	Cork/Rub	88-On	1	

FRICTION CLUTCHES

ILL	ALTO No.	REF No.	Description	Spec	Year	Qty	Notes
2C	075700	31532-41X12	Forward	.078/2.0	88-On	5-7	Tan - 36T - OD: 5.845" - PL
2C	075700A	31532-41X63	Forward	.063/1.6	88-On	5-7	HEG - 36T - OD: 5.845" - PL
3B	075702	31532-41X11	High	.063/1.6	88-On	4-5	HEG - 30T - OD: 5.233" - PL
4D	075704	31532-41X67	Low / Reverse	.078/2.0	88-94	4-7	HEG - 30T - OD: 5.805" - PL
4D	075704-160	31532-41X69	Low / Reverse	.063/1.6	95-On	4-6	HEG - 30T - OD: 5.805" - PL

NISSAN

RE4R01A, RL4R01A

1988-On

FRICTION CLUTCHES

ILL	ALTO No.	REF No.	Description	Spec	Year	Qty	Notes
5B	075706	31532-41X10	Reverse - narrow	.078/2.0	88-92	2	Tan - 34T - OD: 5.880" - PL
5B	075706A	31532-41X24	Reverse - wide	.078/2.0	92-On	2	HEG - 30T - OD: 5.880" - PL
5B	075706-190	NA	DrumSaver® Comp. - Reverse narrow	.075/1.9	88-92	AR	Tan - 34T - OD: 5.880" - PL
5B	075706A190	NA	DrumSaver® Comp. - Reverse wide	.075/1.9	92-On	AR	HEG - 30T - OD: 5.880" - PL
6C	075708	31532-41X13	Overrun	.078/2.0	88-On	3	HEG - 18T - OD: 5.259" - PL
N I	075712	31532-0W410	Transfer Case (QX4) - external teeth	.078/2.0	97-On	8	HEG - 40T - OD: 6.338" - WF

STEEL CLUTCHES

ILL	ALTO No.	REF No.	Description	Spec	Year	Qty	Notes
7C	075701	31536-41X12	Forward	.078/2.0	88-On	5-7	24T - ID: 5.355"
7C	075701A	31536-41X13	Forward	.071/1.8	88-On	5-7	24T - ID: 5.355"
8B	075703	31536-41X21	High	.067/1.7	88-On	4-7	27T - ID: 4.414"
8B	075703K170	NA	High - KOLENE®	.067/1.7	88-On	opt.	27T - ID: 4.414"
8B	075703K152	NA	High - KOLENE® PowerPack® Component	.060/1.52	87-97	AR	27T - ID: 4.414"
8B	075713	31536-41X19	High	.078/2.0	89-On	3-5	27T - ID: 4.414"
8B	075713K200	NA	High - Kolene®	.078/2.0	89-On	3-5	27T - ID: 4.414"
8B	075733	31536-41X02	High	.118/3.0	88-96	3	27T - ID: 4.414"
8B	075743	31536-21X04	High - selective	.095/2.4	88-On	AR	27T - ID: 4.414"
8B	075723	NA	High - selective	.108/2.7	88-On	AR	27T - ID: 4.414"
9D	075705	31666-41X02	Low / Reverse	.078/2.0	88-On	4-7	14T - ID: 5.086"
9D	075705-130	NA	Low / Reverse - selective	.051/1.3	88-On	AR	14T - ID: 5.086"
9D	075705-160	NA	Low / Reverse - selective	.063/1.6	88-On	AR	14T - ID: 5.086"
9D	075705-180	NA	Low / Reverse - selective	.071/1.8	88-On	AR	14T - ID: 5.086"
9D	075705-225	NA	Low / Reverse - selective	.089/2.25	88-On	AR	14T - ID: 5.086"
10B	075707	31536-41X06	Reverse - narrow square tooth	.078/2.0	88-92	2	30T - ID: 5.356"
10B	075707A	31536-41X15	Reverse - wide square tooth	.078/2.0	92-On	2	30T - ID: 5.084"
10B	075707B280	31536-41X20	Reverse - angled tooth	.110/2.8	00-On	2	30T - ID: 5.084"
10B	075707B180	NA	Reverse - angled tooth	.071/1.8	02-On	3	30T - ID: 5.084"
12C	075709	31536-41X10	Overrun	.078/2.0	88-On	3-5	6T - ID: 4.701"
12C	075709-225	NA	Overrun - selective	.089/2.25	88-On	AR	6T - ID: 4.701"
N I	075715K	31536-0W410	Transfer Case (QX4) - internal teeth	.078/2.0	97-On	14	32T - ID: 4.633"

PRESSURE PLATES

ILL	ALTO No.	REF No.	Description	Spec	Year	Qty	Notes
13B	075733	31536-41X02	High - backing	.118/3.0	88-On	AR	
13B	075760-320	NA	High - backing	.126/3.2	88-On	AR	
13B	075760-340	31537-41X71	High - backing	.134/3.4	88-On	AR	
13B	075760-360	31537-41X61	High - backing	.142/3.6	88-On	AR	
13B	075760-380	31537-41X62	High - backing	.150/3.8	88-On	AR	
13B	075760-400	31537-41X63	High - backing	.157/4.0	88-On	AR	
13B	075760-420	31537-41X64	High - backing	.165/4.2	88-On	AR	
13B	075760-440	31537-41X65	High - backing	.173/4.4	88-On	AR	
13B	075760-460	31537-41X66	High - backing	.181/4.6	88-On	AR	
13B	075760-480	31537-41X67	High - backing	.189/4.8	88-On	AR	
13B	075760-500	NA	High - backing	.197/5.0	88-On	AR	
14B	075707A480	31537-42X02	Reverse - backing square tooth	.189/4.8	88-On	AR	
14B	075707A500	31537-42X03	Reverse - backing square tooth	.197/5.0	88-On	AR	
14B	075707A520	31537-42X04	Reverse - backing square tooth	.205/5.2	88-On	AR	
14B	075707A540	31537-42X05	Reverse - backing square tooth	.213/5.4	88-On	AR	
14B	075707A560	31537-42X06	Reverse - backing square tooth	.220/5.6	88-On	AR	

NISSAN

RE4R01A, RL4R01A

1988-On

OEI® Original Equipment Improvements

ILL	ALTO No.	REF No.	Description	Spec	Year	Qty	Notes
KT	075758	NA	DrumSaver® Kit - Reverse Drum		88-92	1	34T Friction
KT	075758A	NA	DrumSaver® Kit - Reverse Drum		92-On	1	30T Friction
KT	075985	SK® RE4R01A	Shift Kit®	Transgo®	88-On	1	

OEI® Original Equipment Improvements - HI-PERFORMANCE

ILL	ALTO No.	REF No.	Description	Spec	Year	Qty	Notes
KT	075757HP	NA	DrumSaver® - High Clutch		88-On	1	

BANDS

ILL	ALTO No.	REF No.	Description	Spec	Year	Qty	Notes
15A	075950	31630-41X08	Brake - Heavy Duty Wide Carbonite®	Crb	88-On	1	Carbonite®
N I	068950	31630-21X00	Brake (without struts)	Tan	96-On	1	

FILTERS

ILL	ALTO No.	REF No.	Description	Spec	Year	Qty	Notes
16G	075942	31728-41X01	Filter - .75" tube		88-On	1	
16G	075942A	31728-41X02	Filter - .300" tube		88-On	1	F325
16G	075942C	31728-48X01	Filter - .150" tube (RL4R01A)		90-On	1	
16G	075944	31728-41X03	Filter - 1-15/16" tube		88-On	1	

METAL CLAD SEALS

ILL	ALTO No.	REF No.	Description	Spec	Year	Qty	Notes
17A	068400	31375-51X00	Front Pump		88-On	1	
18E	042407	31375-41X06	Extension Housing		88-On	1	
18E	075401	31336-X6901	Adapter Housing - all 4wd		88-On	1	
N I	042410A	32709-58S00	Speedometer		88-On	1	
N I	075410	31375-41X00	Manual Lever		88-On	1	

SEALING RINGS

ILL	ALTO No.	REF No.	Description	Spec	Year	Qty	Notes
KT	075600	NA	Sealing Ring Kit - 1M / 8T		88-On	1	without Gov. rings
KT	075600A	E504A	Sealing Ring Kit - 1M / 11T		88-On	1	with Gov. rings
20A	068100	31361-21X00	Stator Support - Reverse drum		88-On	2	
21A	068101	31558-21X00	Stator Support - Direct drum		88-On	2	
22D	075101	31525-41X00	Forward & Overrun drum		88-On	4	
N I	075102	31525-48X00	Governor (RL only)		88-On	3	
23A	075103	31363-41X00	Pump Slide		88-On	1	

BUSHINGS

ILL	ALTO No.	REF No.	Description	Spec	Year	Qty	Notes
KT	075625	NA	Bushing Kit		88-99	1	

NISSAN

RE5R01A, JR506E

1991-On

KITS

*Add Suffix SK for Super Kit

ILL	Description	Years	Friction Module	Steel Module	Overhaul Kit	Banner Kit	Master Kit
KT	Rebuilding Kit - Turbo / Non-Turbo Combo	91-On	122752	122753	122800	122901LS	122901

FRICTION CLUTCHES

ILL	ALTO No.	REF No.	Description	Spec	Year	Qty	Notes
N I	075700	31532-41X12	Forward - without Turbo	.078/2.0	91-On	4-5	Tan - 36T - OD: 5.845" - PL
N I	075700A	31532-41X63	Forward - with Turbo	.063/1.6	91-On	7	HEG - 36T - OD: 5.845" - PL
N I	075702	31532-41X11	High	.063/1.6	91-On	5	HEG - 30T - OD: 5.233" - PL
N I	075704	31532-41X67	Low / Reverse	.078/2.0	91-On	4-8	HEG - 30T - OD: 5.805" - PL
N I	075706	31532-41X10	Reverse	.078/2.0	91-On	2	Tan - 34T - OD: 5.880" - PL
N I	075706A	31532-41X24	Reverse	.078/2.0	91-On	2	HEG - 30T - OD: 5.880" - PL
N I	075708	31532-41X13	Overrun	.078/2.0	91-On	3	HEG - 18T - OD: 5.260" - PL
N I	122712	31532-60X03	Reduction Direct	.078/2.0	91-On	3	HEG - 30T - OD: 4.805" - PL
N I	122710	31532-60X02	Reduction Brake	.063/1.6	91-On	3	HEG - 30T - OD: 5.387" - PL

STEEL CLUTCHES

ILL	ALTO No.	REF No.	Description	Spec	Year	Qty	Notes
N I	075701	31536-41X12	Forward - without Turbo	.078/2.0	91-On	4-5	24T - ID: 5.355"
N I	075701A	31536-41X13	Forward - with Turbo	.071/1.8	91-On	7	24T - ID: 5.355"
N I	075703	31536-41X21	High	.067/1.7	91-On	7	27T - ID: 4.414"
N I	075713	31536-41X19	High	.078/2.0	91-On	5	27T - ID: 4.414"
N I	075713K200	NA	High - Kolene®	.078/2.0	91-On	5	27T - ID: 4.414"
N I	075705	31666-41X02	Low / Reverse	.078/2.0	91-On	4-7	14T - ID: 5.086"
N I	075707	31536-41X06	Reverse	.078/2.0	91-On	2	30T - ID: 5.355"
N I	075707A	31536-41X15	Reverse	.078/2.0	91-On	2	30T - ID: 5.084"
N I	075709	31536-41X10	Overrun	.078/2.0	91-On	5	6T - ID: 4.700"
N I	122713	31536-60X00	Reduction Direct	.078/2.0	91-On	5	28T - ID: 3.822"
N I	122711	31536-60X03	Reduction Brake	.078/2.0	91-On	1	8T - ID: 4.700"
N I	122711A	31536-60X02	Reduction Brake	.102/2.6	91-On	2	8T - ID: 4.700"

BANDS

ILL	ALTO No.	REF No.	Description	Spec	Year	Qty	Notes
N I	122950	31630-51X00	Band		91-On	1	

FILTERS

ILL	ALTO No.	REF No.	Description	Spec	Year	Qty	Notes
N I	122940	24341-1-423-109	Filter - BMW		91-On	1	
N I	122942	NA	Filter - Nissan		91-On	1	

NISSAN

RE5R05A, A5SR1/2

2002-On

KITS

*Add Suffix SK for Super Kit

ILL	Description	Years	Friction Module	Steel Module	Overhaul Kit	Banner Kit	Master Kit
KT	Rebuilding Kit - Infiniti Q45, Nissan 350Z, Frontier, Pathfinder with Molded Pistons	02-On	174752	174753	174800	174901LS	174901
KT	Rebuilding Kit - Infiniti Q45, Nissan 350Z, Frontier, Pathfinder without Molded Pistons	02-On	174752	174753	174800X	174901XLS	174901X
KT	Rebuilding Kit - Armada, Titan with Molded Pistons	02-On	174752B	174753B	174800	174903LS	174903
KT	Rebuilding Kit - Armada, Titan without Molded Pistons	02-On	174752B	174753B	174800X	174903XLS	174903X
KT	Rebuilding Kit - Kia Sorento	04-On	174752C	174753C	174800	174905LS	174905

KITS - Specialty Kit - with PowerPack®

ILL	Description	Years	Friction and Steel Module	Overhaul Kit	Master Kit
KT	Rebuilding Kit - Infiniti Q45, Nissan 350Z, Frontier, Pathfinder with Input & Direct PowerPacks® (without Molded Pistons)	02-On	174750PWR	174800X	174901PWR
KT	Rebuilding Kit - Armada, Titan with Input & Direct PowerPacks® (without Molded Pistons)	02-On	174750BPWR	174800X	174903PWR

KITS - HI-PERFORMANCE - with PowerPack®

ILL	Description	Years	Friction and Steel Module	Overhaul Kit	Master Kit
KT	Rebuilding Kit - Armada, Titan with Input & Direct PowerPacks® (without Molded Pistons)	02-On	174750BHPPWR	174800X	174903HPPWR

FRICTION CLUTCHES

ILL	ALTO No.	REF No.	Description	Spec	Year	Qty	Notes
N I	174700-175	31532-90X00	K-1 Input	.069/1.75	02-On	6-7	HEG - 60T - OD: 6.349" - PLNI
N I	174702-160	31532-90X02	K-2 Hi - Lo Rev	.063/1.6	02-On	4-5	HEG - 30T - OD: 4.900" - PLNI
N I	174704-170	31662-90X00	B-1 Reverse Brake	.069/1.7	02-On	6	HEG - 50T - OD: 6.600" - PLNI
N I	174704A162	NA	B-1 Reverse Brake - SUV, Truck	.064/1.63	02-On	7	HEG - 40T - OD: 6.596" - PLNI
N I	174704A180	45625-4C000	B-1 Reverse Brake - Kia Sorento	.071/1.78	04-On	5	HEG - 40T - OD: 6.596" - PLNI
		31662-95X00					
N I	174706-160	31662-90X02	B-2 Low Coast	.063/1.6	02-On	3-4	HEG - 30T - OD: 5.200" - PLNI
N I	174708-155	31662-90X01	B-3 Forward	.061/1.55	02-On	5-6	HEG - 39T - OD: 5.700" - PLNI
N I	174710-180	31532-90X01	Direct	.071/1.8	02-On	5	HEG - 24T - OD: 6.200" - PLNI

FRICTION CLUTCHES - HI-PERFORMANCE - Red Eagle®

ILL	ALTO No.	REF No.	Description	Spec	Year	Qty	Notes
N I	174746-152	NA	K1 Input - Powerpack® Component	.060/1.52	02-On	7	Red - 60T - OD: 6.349" - PLNI
N I	174742-160	NA	K-2 Hi - Lo Rev	.063/1.6	02-On	7	Red - 30T - OD: 4.900" - PLNI
N I	174744-170	NA	B-1 Reverse Brake	.069/1.7	02-On	7	Red - 50T - OD: 6.600" - PLNI
N I	174744A162	NA	B-1 Reverse Brake - SUV, Truck	.064/1.63	02-On	7	Red - 40T - OD: 6.596" - PLNI
N I	174746A160	NA	B-2 Low Coast	.063/1.6	02-On	4	Red - 30T - OD: 5.200" - PLNI
N I	174748-155	NA	B-3 Forward	.061/1.55	02-On	5	Red - 39T - OD: 5.700" - PLNI
N I	174740-150	NA	Direct - Powerpack® Component	.059/1.5	02-On	8	Red - 24T - OD: 6.252" - PLNI

STEEL CLUTCHES

ILL	ALTO No.	REF No.	Description	Spec	Year	Qty	Notes
N I	174701-200	31536-90X00	K-1 Input	.079/2.0	02-On	6-7	24T - ID: 5.624"
N I	174703-240	31536-90X02	K-2 Hi - Lo Rev	.094/2.4	02-On	4-5	24T - ID: 3.700"
N I	TBA	31536-95X00	K-2 Hi - Lo Rev	.094/2.4	02-On	AR	(Larger OD)
N I	174703A240	NA	K-2 Hi - Lo Rev - SUV, Truck	.094/2.39	02-On	5	24T - ID: 3.741"
N I	174705-200	31666-90X00	B-1 Reverse Brake	.079/2.0	02-On	6	18T - ID: 5.900"
N I	174705A160	31356-AA-310	B-1 Reverse Brake - SUV, Truck	.063/1.6	02-On	7	18T - ID: 5.930"
N I	174705A200	45626-4C000	B-1 Reverse Brake - Kia Sorento	.079/2.01	02-On	5	18T - ID: 5.930"
N I	TBA	31565-95X01	B-2 Low Coast	.071/1.8	02-On	AR	15T - ID: 4.400"
N I	TBA	31666-95X02	B-2 Low Coast	.063/1.6	02-On	AR	16T - ID: 4.400"

NISSAN

RE5R05A, A5SR1/2

2002-On

STEEL CLUTCHES

ILL	ALTO No.	REF No.	Description	Spec	Year	Qty	Notes
N I	174707-200	31666-90X02	B-2 Low Coast	.079/2.0	02-On	4	18T - ID: 4.400"
N I	174707A157	NA	B-2 Low Coast - SUV, Truck	.062/1.57	02-On	1	16T - ID: 4.441"
N I	174707B178	NA	B-2 Low Coast - SUV, Truck	.070/1.78	02-On	3	15T - ID: 4.441"
N I	174709-200	31666-90X01	B-3 Forward	.079/2.0	02-On	5	18T - ID: 4.900"
N I	TBA	31666-95X00	B-3 Forward	.063/1.6	02-On	AR	16T - ID: 4.900"
N I	174709A157	NA	B-3 Forward - SUV, Truck	.062/1.57	02-On	AR	16T - ID: 4.893"
N I	174711-240	31536-95X01	Direct	.094/2.4	02-On	5-6	24T - ID: 5.500"
N I	TBA	31636-90X01	Direct	.102/2.6	02-On	AR	24T - ID: 5.500"

STEEL CLUTCHES - HI-PERFORMANCE - Kolene®

ILL	ALTO No.	REF No.	Description	Spec	Year	Qty	Notes
N I	174701K170	NA	K1 Input - Powerpack® Component	.067/1.7	02-On	7-8	Kol - 24T - ID: 5.624"
N I	174703AK240	NA	K-2 Hi - Lo Rev - SUV, Truck	.094/2.4	02-On	5	Kol - 24T - ID: 3.741"
N I	174705AK160	NA	B-1 Reverse Brake - SUV, Truck	.063/1.6	02-On	7	Kol - 18T - ID: 5.930"
N I	174707AK157	NA	B-2 Low Coast - SUV, Truck	.062/1.57	02-On	1	Kol - 16T - ID: 4.441"
N I	174707BK178	NA	B-2 Low Coast - SUV, Truck	.070/1.78	02-On	3	Kol - 15T - ID: 4.441"
N I	174709AK157	NA	B-3 Forward - SUV, Truck	.062/1.57	02-On	5	Kol - 16T - ID: 4.893"
N I	174711K150	NA	Direct - Powerpack® Component	.059/1.5	02-On	8	Kol - 24T - ID: 5.500"

PRESSURE PLATES

ILL	ALTO No.	REF No.	Description	Spec	Year	Qty	Notes
N I	174761	NA	Input - Powerpack® Component		02-On	1	

OEI® Original Equipment Improvements

ILL	ALTO No.	REF No.	Description	Spec	Year	Qty	Notes
KT	174757	NA	PowerPack® - Direct Hi-Performance		02-On	1	
KT	174756	NA	PowerPack® - Input Hi-Performance		02-On	1	Replaces 6 or 7 Plate Stackup

TORQUE CONVERTER - KITS & CLUTCHES

ILL	ALTO No.	REF No.	Description	Spec	Year	Qty	Notes
KT	174759	NA	Repair Kit - includes Frictions, Steels, & Ring/Seal Kit		02-On	1	
N I	174835	NA	Ring & Seal Kit		02-On	1	
N I	174712-188	JA-CP-1	Friction	.074/1.88	02-On	3	HEG - 40T - OD: 6.474" - SB
N I	174713-178	JA-CP-2	Steel	.070/1.78	02-On	4	36T - ID: 5.610"
N I	174762	NA	Pressure Plate	.258/6.55	02-On	1	35T - ID: 5.607"

BANDS

ILL	ALTO No.	REF No.	Description	Spec	Year	Qty	Notes
N I	174950	31630-51X00	Band		02-On	1	

FILTERS

ILL	ALTO No.	REF No.	Description	Spec	Year	Qty	Notes
N I	174940	31728-97X00	Filter		02-On	1	

BUSHINGS

ILL	ALTO No.	REF No.	Description	Spec	Year	Qty	Notes
KT	174625	NA	Bushing Kit		02-On	1	

MOLDED PISTONS

ILL	ALTO No.	REF No.	Description	Spec	Year	Qty	Notes
KT	174670	NA	Piston Kit		02-On	1	3 pistons

NISSAN

RE5R05A, A5SR1/2

2002-On

MOLDED PISTONS

ILL	ALTO No.	REF No.	Description	Spec	Year	Qty	Notes
N I	174301	NA	Input		02-On	1	
N I	174302	NA	Direct		02-On	1	
N I	174303	NA	High-Low		02-On	1	

NISSAN

RE7R01A, JR710E 2009-On

NISSAN, INFINITI

KITS

*Add Suffix SK for Super Kit

ILL	Description	Years	Friction Module	Steel Module	Overhaul Kit	Banner Kit	Master Kit
KT	Rebuilding Kit - with Molded Pistons	09-On	174752D	174753D	174804	174907LS	174907
KT	Rebuilding Kit - without Molded Pistons	09-On	174752D	174753D	174804X	174907XLS	174907X

FRICTION CLUTCHES

ILL	ALTO No.	REF No.	Description	Spec	Year	Qty	Notes
N I	174700A175	NA	C-1 Input	.069/1.75	09-On	6	HEG - 60T - OD: 6.340" - PLNI
N I	174700B175	NA	C-1 Input	.069/1.75	09-On	6	HEG - 40T - OD: 6.340" - PLNI
N I	174710-180	NA	C-2 Direct	.071/1.8	09-On	5	HEG - 24T - OD: 6.200" - PLNI
N I	174702-160	NA	C-3 High-Low/Reverse	.063/1.6	09-On	4	HEG - 30T - OD: 4.900" - PLNI
N I	174714-150	NA	B-1 Front Brake	.059/1.5	09-On	2	HEG - 36T - OD: 7.320" - PLNI
N I	174706A152	NA	B-2 Low Brake	.060/1.57	09-On	5	HEG - 36T - OD: 5.790" - PLNI
N I	174708A152	NA	B-3 2-3-4-6 Clutch	.060/1.57	09-On	4	HEG - 36T - OD: 5.788" - PLNI
N I	174704-170	NA	B-4 Reverse Brake	.069/1.7	09-On	6	HEG - 50T - OD: 6.600" - PLNI

STEEL CLUTCHES

ILL	ALTO No.	REF No.	Description	Spec	Year	Qty	Notes
N I	174701A200	NA	C-1 Input	.079/2.0	09-On	6	24T - ID: 5.760"
N I	174711-240	NA	C-2 Direct	.094/2.4	09-On	5	24T - ID: 5.500"
N I	174703-240	NA	C-3 High-Low/Reverse	.094/2.4	09-On	4	24T - ID: 3.700"
N I	174715A215	NA	B-1 Front Brake	.085/2.16	09-On	1	11T - ID: 6.540" (8 notches)
N I	174715-198	NA	B-1 Front Brake	.078/1.98	09-On	1	11T - ID: 6.540" (10 notches)
N I	174709A157	NA	B-2 Low Brake	.062/1.57	09-On	5	16T - ID: 4.893"
N I	174709B200	NA	B-3 2-3-4-6 Clutch	.079/2.0	09-On	4	30T - ID: 4.560"
N I	174705A200	NA	B-4 Reverse Brake	.079/2.0	09-On	6	18T - ID: 5.930"

TORQUE CONVERTER - KITS & CLUTCHES

ILL	ALTO No.	REF No.	Description	Spec	Year	Qty	Notes
N I	174759A	NA	Kit - OE Replacement (contains Frictions, Steels & Pressure Plate)		09-On	1	
N I	174722-180	NA	Friction	.071/1.8	09-On	3	HEG - 24T - OD: 6.825"
N I	174723-180	NA	Steel	.071/1.8	09-On	3	30T - ID: 5.607"
N I	174762A	NA	Pressure Plate	.168/4.27	09-On	1	30T - ID: 5.609"

MOLDED PISTONS

ILL	ALTO No.	REF No.	Description	Spec	Year	Qty	Notes
KT	174670	NA	Piston Kit		09-On	1	3 pistons
N I	174301	NA	Input		09-On	1	
N I	174302	NA	Direct		09-On	1	
N I	174303	NA	High-Low		09-On	1	

NISSAN

RE4R03A 1989-On, RG4R01A 1988-On
ISUZU JR403E 1988-On

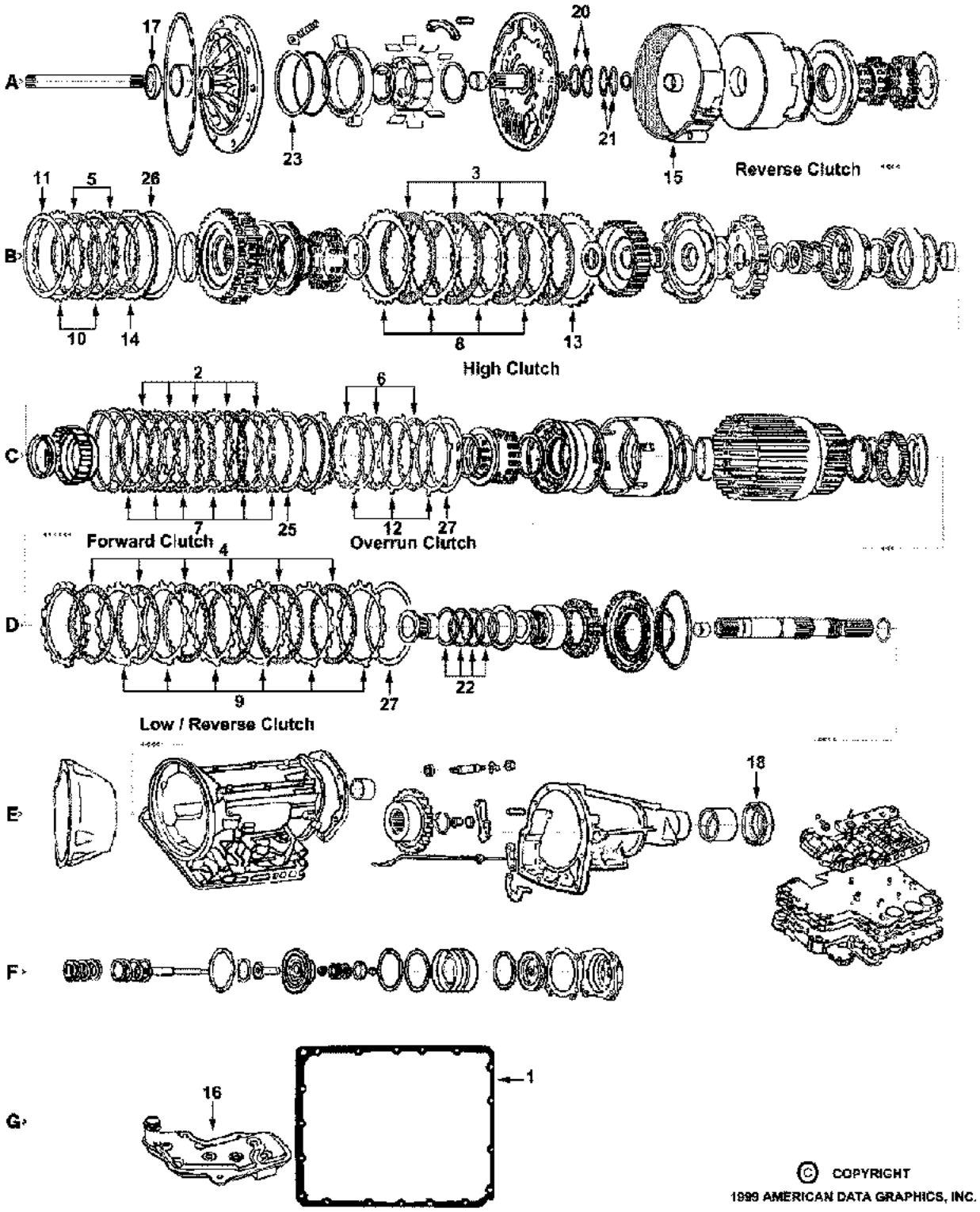

NISSAN

RE4R03A 1989-On, RG4R01A 1988-On
ISUZU JR403E 1988-On

KITS

*Add Suffix SK for Super Kit

ILL	Description	Years	Friction Module	Steel Module	Overhaul Kit	Banner Kit	Master Kit
KT	Rebuilding Kit - RE4R03A	89-On	106752	106753	106800	106901LS	106901
KT	Rebuilding Kit - RG4R01A / JR403E	88-4/92	106752A	106753A	106802	106903LS	106903
KT	Rebuilding Kit - RG4R01A / JR403E	5/92-On	106752B	106753B	106802	106903ALS	106903A

MISCELLANEOUS GASKETS & KIT COMPONENTS

ILL	ALTO No.	REF No.	Description	Spec	Year	Qty	Notes
1G	106816	31397-51X00	Gasket, Oil Pan	Cork/Rub	88-On	1	

FRICTION CLUTCHES

ILL	ALTO No.	REF No.	Description	Spec	Year	Qty	Notes
2C	106700	31532-51X01	Forward	.078/2.0	88-On	7-9	HEG - 50T - OD: 6.610" - PL
2C	106700-191	NA	Forward selective	.075/1.91	88-On	9	HEG - 50T - OD: 6.610" - PL
3B	106702-160	31532-51X04	High	.063/1.6	88-On	6-7	HEG - 64T - OD: 6.140" - PL
3B	106742-160	NA	High - Red Eagle®	.063/1.6	88-On	6-7	Red - 64T - OD: 6.140" - SM
4D	106706	31532-51X10	Low / Reverse	.063/1.6	88-On	4/8	HEG - 33T - OD: 6.140" - PL
5B	106702-190	31532-51X05	Reverse	.075/1.9	88-On	3	HEG - 64T - OD: 6.140" - PL
5B	106702A190	NA	Reverse	.075/1.9	90-On	3	HEG - 64T - OD: 6.140" - PL
6C	106708	31532-51X02	Overrun - RE4R03A	.063/1.6	89-On	4	HEG - 20T - OD: 6.091" - PL
6C	106708-200	31532-51X06	Overrun - RG4R01A & JR403E	.078/2.0	88-On	5	HEG - 20T - OD: 6.091" - PL

STEEL CLUTCHES

ILL	ALTO No.	REF No.	Description	Spec	Year	Qty	Notes
7C	106701	31536-51X07	Forward	.078/2.0	88-On	8/14	36T - ID: 6.107"
25C	TBA	31535-51X00	Forward cushion		88-On	1	
8B	106703	31536-51X00	High	.078/2.0	88-On	6-7	40T - ID: 5.200"
8B	106703-280	31536-51X06	High RE4R03A only	.110/2.8	88-On	1	40T - ID: 5.200"
8B	106703-300	31536-51X04	High - RG4R01A & JR403E	.118/3.0	88-92	3	40T - ID: 5.200"
9D	106707	31666-51X01	Low / Reverse	.078/2.0	88-On	8-9	11T - ID: 5.519"
27D	TBA	31535-51X04	Low / Reverse cushion		88-On	1	
10B	106703	31536-51X00	Reverse	.078/2.0	88-On	3	40T - ID: 5.200"
26B	TBA	31535-51X05	Reverse cushion		88-On	1	
12C	106709	31536-51X02	Overrun	.078/2.0	88-On	5-7	6T - ID: 5.379"
27C	TBA	31535-51X02	Overrun cushion		88-On	1	

BANDS

ILL	ALTO No.	REF No.	Description	Spec	Year	Qty	Notes
15A	106950	31630-51X04	Brake	Tan	88-On	1	

FILTERS

ILL	ALTO No.	REF No.	Description	Spec	Year	Qty	Notes
16G	106940	31728-51X05	Filter - RE4R03A		89-On	1	
16G	075942	31728-41X01	Filter - RG4R01A & JR403E		88-On	1	

NISSAN

RE4R03A 1989-On, RG4R01A 1988-On
ISUZU JR403E 1988-On

METAL CLAD SEALS

ILL	ALTO No.	REF No.	Description	Spec	Year	Qty	Notes
17A	068400	31375-51X00	Front Pump		88-On	1	
18E	106401	31375-51X01	Extension Housing - RE4R03A		89-On	1	
18E	106402	94483329	Extension Housing - RG4R01A & JR403E		88-On	1	
18E	075401	31336-X6901	Adapter Housing 4wd		88-On	1	
N I	075410	31375-41X00	Manual Lever		88-On	1	

SEALING RINGS

ILL	ALTO No.	REF No.	Description	Spec	Year	Qty	Notes
KT	075600	NA	Sealing Ring Kit - 1M / 8T		88-On	1	
20A	068100	31361-21X00	Stator Support - Reverse drum		88-On	2	
21A	068101	31558-21X00	Stator Support - Direct drum		88-On	2	
22D	075101	31525-41X00	Forward & Overrun drum		88-On	4	
23A	075103	31363-41X00	Pump Slide		88-On	1	

BUSHINGS

ILL	ALTO No.	REF No.	Description	Spec	Year	Qty	Notes
KT	106625	NA	Bushing Kit		88-On	1	

NISSAN

RN3F01A, RL3F01A

1982-92

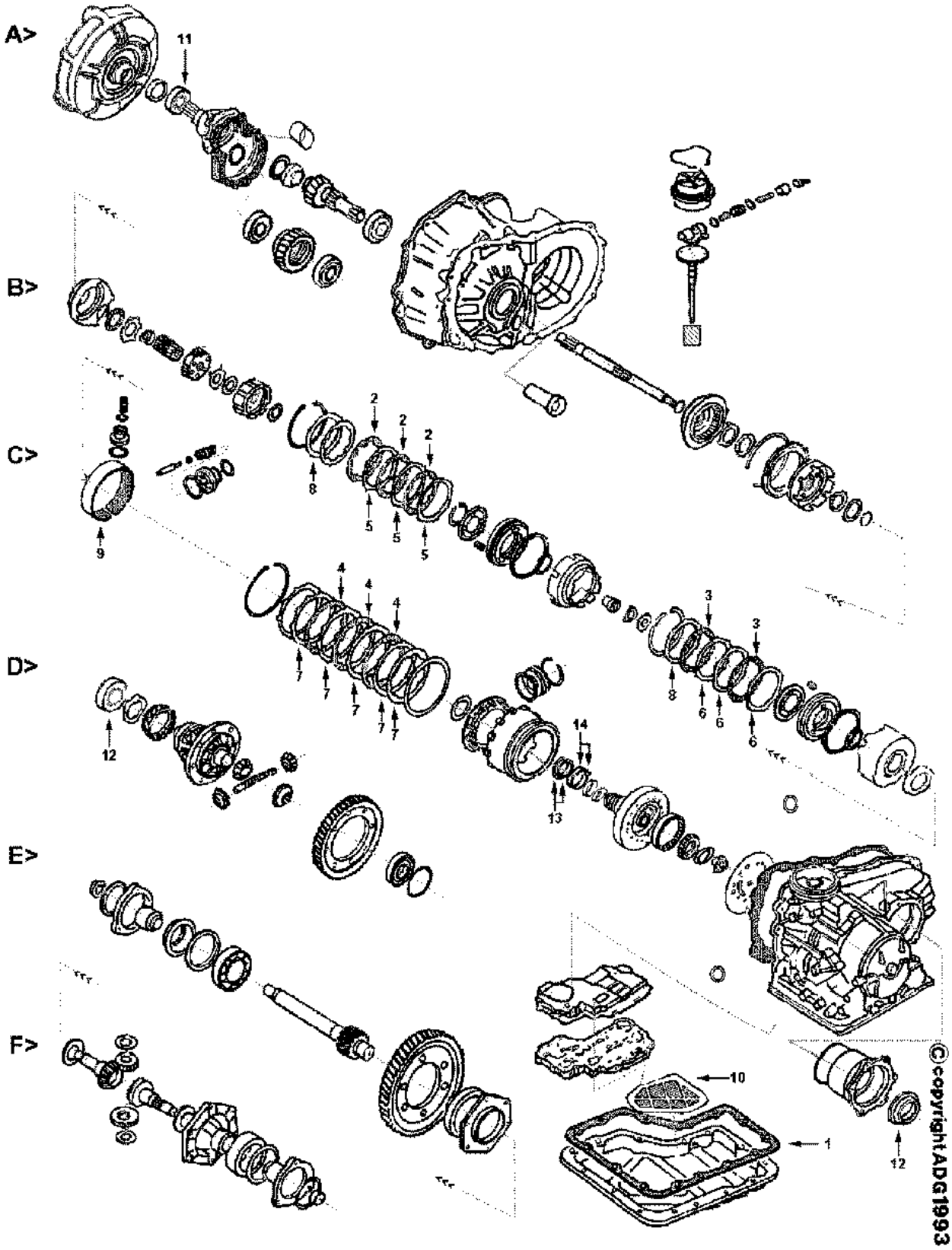

NISSAN

RN3F01A, RL3F01A

1982-92

KITS

*Add Suffix SK for Super Kit

ILL	Description	Years	Friction Module	Steel Module	Overhaul Kit	Banner Kit	Master Kit
KT	Rebuilding Kit - PULSAR Non Turbo (1.5L)	83-90	061752	061753	061800	061901LS	061901
KT	Rebuilding Kit - PULSAR Turbo (1.6L)	83-90	061752A	061753	061800	061901ALS	061901A
KT	Rebuilding Kit - SENTRA All	82-84	061752	061753	061800	061901LS	061901
KT	Rebuilding Kit - SENTRA Diesel engine	85	061752	061753	061800	061901LS	061901
KT	Rebuilding Kit - SENTRA Gas engine	85	061752A	061753	061800	061901ALS	061901A
KT	Rebuilding Kit - SENTRA All	86-92	061752A	061753	061800	061901ALS	061901A
KT	Rebuilding Kit - STANZA Fuel Injected	82-85	061752	061753	061800	061901LS	061901
KT	Rebuilding Kit - STANZA Carbureted	82-85	061752A	061753	061800	061901ALS	061901A
KT	Rebuilding Kit - Combo	82-92	061752B	061753	061800	061901BLS	061901B

MISCELLANEOUS GASKETS & KIT COMPONENTS

ILL	ALTO No.	REF No.	Description	Spec	Year	Qty	Notes
1F	061816	31397-01X01	Gasket, Oil Pan	Cork/Rub	82-92	1	

FRICTION CLUTCHES

ILL	ALTO No.	REF No.	Description	Spec	Year	Qty	Notes
2B	061700	31532-01X00	Front (Forward) - used in 061752	.071/1.8	82-92	3-4	HEG - 8T - OD: 5.044" - PL
2B	061704	31532-01X02	Front (Forward) - used in 061752A	.063/1.6	82-92	4-6	Tan - 8T - OD: 5.044" - PL
3B	061700	31532-01X00	Rear (High / Reverse) - used in 061752	.071/1.8	82-92	2-4	HEG - 8T - OD: 5.044" - PL
3B	061704	31532-01X02	Rear (High / Reverse) - used in 061752A	.063/1.6	82-92	2-4	Tan - 8T - OD: 5.044" - PL
4C	061702	31662-01X01	Low / Reverse	.078/2.0	82-92	3-5	HEG - 8T - OD: 6.945" - PL

STEEL CLUTCHES

ILL	ALTO No.	REF No.	Description	Spec	Year	Qty	Notes
5B	061701	31536-01X00	Front (Forward)	.078/2.0	82-92	2-3	12T - ID: 4.416"
6B	061701	31536-01X00	Rear (High / Reverse)	.078/2.0	82-92	3-4	12T - ID: 4.416"
7C	061703	31666-01X00	Low / Reverse	.078/2.0	82-92	3-5	8T - ID: 6.302"

PRESSURE PLATES

ILL	ALTO No.	REF No.	Description	Spec	Year	Qty	Notes
8B	061760-340	31537-01X05	Front - reaction	.134/3.4	82-92	AR	
8B	061760-360	31537-01X00	Front & Rear reaction	.142/3.6	82-92	AR	
8B	061760-380	31537-01X01	Front & Rear reaction	.150/3.8	82-92	AR	
8B	061760-400	31537-01X02	Front & Rear reaction	.157/4.0	82-92	AR	
8B	061760-420	31537-01X03	Front & Rear reaction	.165/4.2	82-92	AR	
8B	061760-440	31537-01X04	Front & Rear reaction	.173/4.4	82-92	AR	

BANDS

ILL	ALTO No.	REF No.	Description	Spec	Year	Qty	Notes
9C	061950	31630-01X00	Brake	Tan	82-92	1	

FILTERS

ILL	ALTO No.	REF No.	Description	Spec	Year	Qty	Notes
10F	061940	31728-01X09	Filter		82-86	1	
10F	061942	31728-01X10	Filter		87-92	1	

NISSAN

RN3F01A, RL3F01A

1982-92

METAL CLAD SEALS

ILL	ALTO No.	REF No.	Description	Spec	Year	Qty	Notes
11A	061400	31197-01X01	Converter Housing		82-92	1	
12D	061405	38342-M8001	Axle - Right & Left		82-92	2	
N I	042410	32709-14600	Speedometer		82-92	1	

SEALING RINGS

ILL	ALTO No.	REF No.	Description	Spec	Year	Qty	Notes
KT	061600	E507	Sealing Ring Kit - 4M		82-92	1	
13C	061100	31361-01X00	Oil Pump stator - Hi / Reverse drum	1.929	82-92	2	
14C	061101	31362-01X00	Oil Pump stator - Forward drum	1.776	82-92	2	

BUSHINGS

ILL	ALTO No.	REF No.	Description	Spec	Year	Qty	Notes
KT	061625	NA	Kit		82-92	1	

NISSAN

RE4F02A, RL4F02A

1985-94

A>

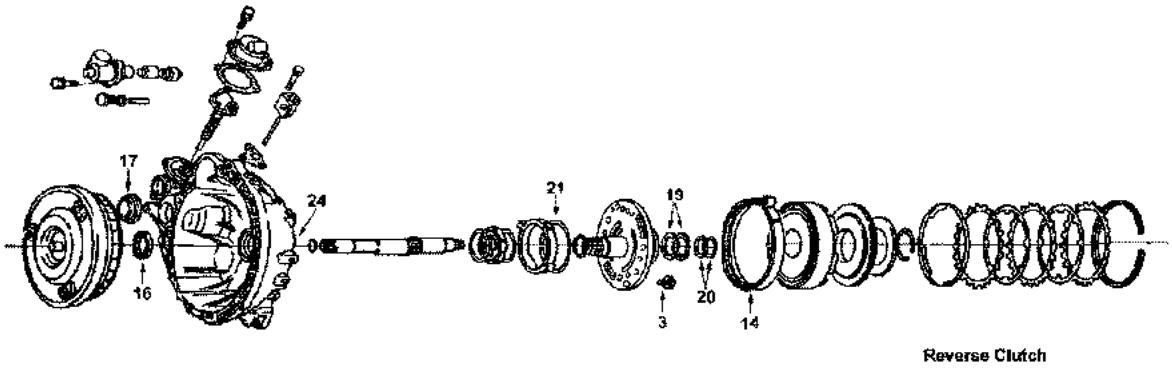

B>

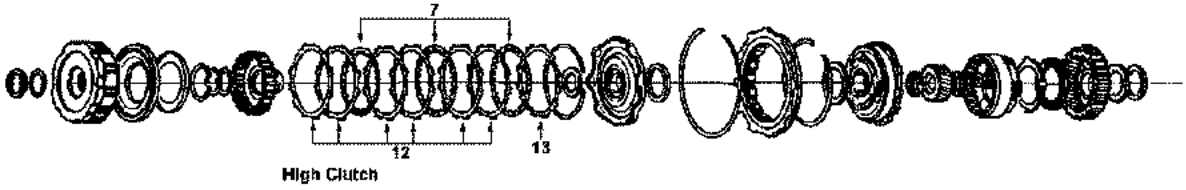

C>

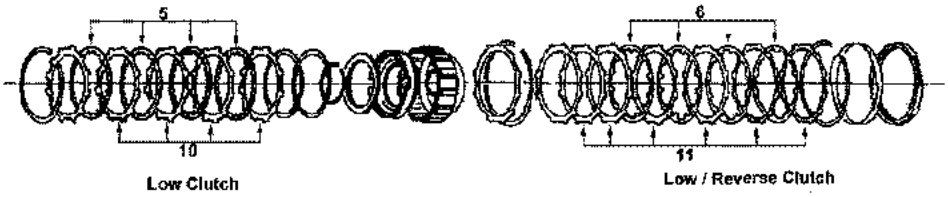

D>

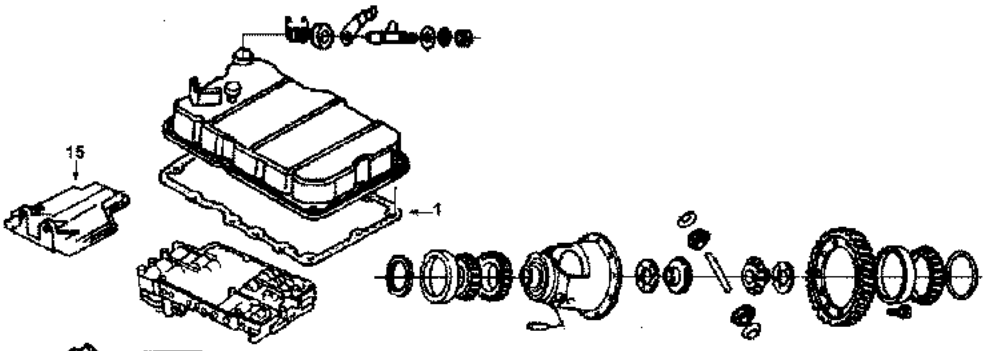

E>

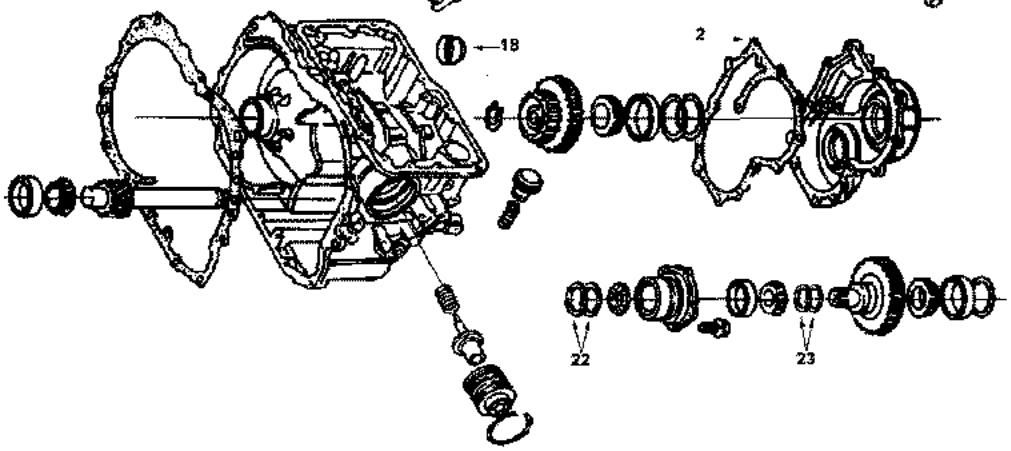

F>

NISSAN

RE4F02A, RL4F02A

1985-94

KITS

*Add Suffix SK for Super Kit

ILL	Description	Years	Friction Module	Steel Module	Overhaul Kit	Banner Kit	Master Kit
KT	Rebuilding Kit - MAXIMA RL4F02A	85	068752	068753	068800	068901LS	068901
KT	Rebuilding Kit - MAXIMA RL4F02A	86-88	068752A	068753A	068800	068901ALS	068901A
KT	Rebuilding Kit - MAXIMA RE4F02A	89-94	068752E	068753E	068800	068901BLS	068901B
KT	Rebuilding Kit - STANZA RL4F02A	86-89	068752B	068753B	068800	068903LS	068903
KT	Rebuilding Kit - STANZA RL4F02A (combo)	85-89	068752D	068753B	068800	068903XLS	068903X
KT	Rebuilding Kit - STANZA RE4F02A	90-92	068752F	068753F	068800	068903ALS	068903A
KT	Rebuilding Kit - PULSAR (NX) RL4F02A	87-90	068752C	068753C	068800	068905LS	068905
KT	Rebuilding Kit - AXXESS (Order VB gaskets seperate)	89-93	068752F	068753F	068800	068907LS	068907

MISCELLANEOUS GASKETS & KIT COMPONENTS

ILL	ALTO No.	REF No.	Description	Spec	Year	Qty	Notes
1D	068816	31396-21X01	Gasket, VB (Top) cover	Cork/Rub	85-94	1	
2E	068818	31397-21X00	Gasket, Rear cover	Cork/Rub	85-94	1	
KT	068801V	NA	Valve Body gasket kit - Axxess		89-93	1	
3F	068315	31353-21X00	Bolt, Front pump & Output bearing retainer	M8	85-94	11	

FRICTION CLUTCHES

ILL	ALTO No.	REF No.	Description	Spec	Year	Qty	Notes
4A	068704	31532-21X01	Reverse	.078/2.0	85-89	2	Tan - 8T - OD: 5.880" - PL
4A	075706	31532-41X10	Reverse	.078/2.0	90-94	2	Tan - 34T - OD: 5.880" - PL
4A	075706-190	NA	Reverse - PowerPack® Component	.074/1.9	90-94	AR	Tan - 34T - OD: 5.880" - PL
5C	068700	31532-21X09	Low	.078/2.0	85-94	4-6	Tan - 30T - OD: 5.667" - PL
6C	068706	31662-21X01	Low / Reverse	.078/2.0	85-94	5-7	Tan - 12T - OD: 7.165" - PL

FRICTION CLUTCHES - MAXIMA

ILL	ALTO No.	REF No.	Description	Spec	Year	Qty	Notes
7B	068702	31562-21X01	High - Narrow spline	.067/1.7	7/84-9/84	4	Tan - 30T - OD: 5.035" - PL
7B	068712	31532-21X10	High - Wide spline	.063/1.6	85-89	4	Tan - 30T - OD: 5.035" - PL
7B	075702	31532-41X11	High - Wide spline	.063/1.6	90-94	4	HEG - 30T - OD: 5.233" - PL

FRICTION CLUTCHES - STANZA

ILL	ALTO No.	REF No.	Description	Spec	Year	Qty	Notes
7B	068702A	31562-21X00	High - Narrow spline	.078/2.0	85-2/88	3	Tan - 30T - OD: 5.035" - PL
7B	068712	31532-21X10	High - Wide spline	.063/1.6	2/88-89	3-4	Tan - 30T - OD: 5.035" - PL
7B	068712A	NA	High - Wide spline	.079/2.0	85-89	4	Tan - 30T - OD: 5.041" - PL
7B	075702	31532-41X11	High - Wide spline	.063/1.6	90-94	4	HEG - 30T - OD: 5.233" - PL

FRICTION CLUTCHES - PULSAR (NX)

ILL	ALTO No.	REF No.	Description	Spec	Year	Qty	Notes
7B	075702	31532-41X11	High - Wide spline	.063/1.6	87-90	4	HEG - 30T - OD: 5.233" - PL

FRICTION CLUTCHES - AXXESS

ILL	ALTO No.	REF No.	Description	Spec	Year	Qty	Notes
7B	075702	31532-41X11	High - Wide spline	.063/1.6	90-94	4	HEG - 30T - OD: 5.233" - PL

NISSAN

RE4F02A, RL4F02A

1985-94

STEEL CLUTCHES

ILL	ALTO No.	REF No.	Description	Spec	Year	Qty	Notes
8A	068705	31536-21X01	Reverse	.078/2.0	85-89	2	30T - ID: 5.360"
8A	075707	31536-41X06	Reverse	.078/2.0	90-94	2	30T - ID: 5.355"
8A	068705-170	NA	Reverse - PowerPack® Component	.067/1.7	85-89	AR	30T - ID: 5.360"
10C	068701	31596-21X01	Low	.078/2.0	85-94	5-7	12T - ID: 4.851"
11C	068707	31666-23X00	Low / Reverse	.078/2.0	85-94	5-7	12T - ID: 6.498"
12B	068713	31566-21X00	High MAXIMA	.078/2.0	85-10/85	1	24T - ID: 4.412"
12B	068733	31566-21X01	High MAXIMA	.118/3.0	85-10/85	3	24T - ID: 4.412"
12B	068723	31566-21X02	High MAXIMA	.108/2.75	85	3	24T - ID: 4.412"
12B	068703	31566-21X03	High MAXIMA	.067/1.6	86-88	7	24T - ID: 4.412"
12B	068743	31536-21X03	High MAXIMA	.055/1.4	89-90	7	24T - ID: 4.412"
12B	075743	31536-21X04	High MAXIMA	.095/2.4	91-94	4	24T - ID: 4.412"
12B	068713	31536-21X00	High STANZA	.078/2.0	86-2/88	5	24T - ID: 4.412"
12B	068723	31566-21X02	High STANZA	.108/2.75	2/88-90	5-6	24T - ID: 4.412"
12B	075743	31536-21X04	High STANZA	.095/2.4	91-92	4	24T - ID: 4.412"
12B	075713	31536-41X19	High PULSAR (NX)	.078/2.0	87-90	1	27T - ID: 4.412"
12B	075713K200	NA	High - Kolene® PULSAR (NX)	.078/2.0	87-90	1	27T - ID: 4.412"
12B	075733	31536-41X02	High PULSAR (NX)	.118/3.0	87-90	3	27T - ID: 4.412"
12B	075743	31536-21X04	High AXXESS	.095/2.4	91-93	4	24T - ID: 4.412"

PRESSURE PLATES

ILL	ALTO No.	REF No.	Description	Spec	Year	Qty	Notes
13B	068760-340	NA	High Backing- selective	.134/3.4	85-94	AR	24T
13B	068760-360	31567-21X00	High Backing- selective	.142/3.6	85-94	AR	24T
13B	068760-380	31567-21X01	High Backing- selective	.150/3.8	85-94	AR	24T
13B	068760-400	31567-21X02	High Backing- selective	.157/4.0	85-94	AR	24T
13B	068760-420	31567-21X03	High Backing- selective	.165/4.2	85-94	AR	24T
13B	068760-440	31567-21X04	High Backing- selective	.173/4.4	85-94	AR	24T
13B	068760-460	31567-21X05	High Backing- selective	.181/4.6	85-94	AR	24T
13B	068760-480	31567-21X06	High Backing- selective	.189/4.8	85-94	AR	24T
13B	068760-500	NA	High Backing- selective	.197/5.0	85-94	AR	24T
13B	075760-320	NA	High Backing- selective	.126/3.2	91-93	AR	27T
13B	075760-340	31537-41X71	High Backing- selective	.134/3.4	91-93	AR	27T
13B	075760-360	31537-41X61	High Backing- selective	.142/3.6	91-93	AR	27T
13B	075760-380	31537-41X62	High Backing- selective	.150/3.8	91-93	AR	27T
13B	075760-400	31537-41X63	High Backing- selective	.157/4.0	91-93	AR	27T
13B	075760-420	31537-41X64	High Backing- selective	.165/4.2	91-93	AR	27T
13B	075760-440	31537-41X65	High Backing- selective	.173/4.4	91-93	AR	27T
13B	075760-460	31537-41X66	High Backing- selective	.181/4.6	91-93	AR	27T
13B	075760-480	31537-41X67	High Backing- selective	.189/4.8	91-93	AR	27T
13B	075760-500	NA	High Backing- selective	.197/5.0	91-93	AR	27T

OEI® Original Equipment Improvements

ILL	ALTO No.	REF No.	Description	Spec	Year	Qty	Notes
KT	068758	NA	DrumSaver® - Reverse (8T friction pack) - RL4F02A only		various	1	allows reuse of worn drum
KT	075758	NA	DrumSaver® - Reverse (34T friction pack)		various	1	allows reuse of worn drum
KT	075986	NA	Shift Kit®	Transgo®	various	1	

NISSAN

RE4F02A, RL4F02A

1985-94

BANDS

ILL	ALTO No.	REF No.	Description	Spec	Year	Qty	Notes
14A	068950	31630-21X00	Brake (Overdrive)	Tan	85-94	1	

FILTERS

ILL	ALTO No.	REF No.	Description	Spec	Year	Qty	Notes
15D	068940	31728-21X02	Filter		85-94	1	

METAL CLAD SEALS

ILL	ALTO No.	REF No.	Description	Spec	Year	Qty	Notes
16A	068400	31344-21X00	Converter Housing		85-94	1	
N I	042410	32709-14600	Speedometer		85-94	1	
N I	TBA	NA	Throttle Valve seal		85-94	1	
17A	068425	38342-03E01	Right Axle - MAXIMA	2.333	85-94	1	
18E	068427	38342-21X01	Left Axle - MAXIMA (.433 thick)	2.250	85-94	1	
17A	068425	38342-03E01	Right Axle - STANZA (Except 4WD wagon)	2.333	85-92	1	
17A	068428	38342-06R00	Right Axle - STANZA (4WD wagon)	2.835	85-94	1	
18E	068426	38342-21X00	Left Axle - STANZA (without limited slip)	2.250	85-92	1	
18E	068426A	38342-21X03	Left Axle - STANZA (with limited slip)	3.557	85-92	1	
17A	068425	38342-03E01	Right Axle - PULSAR (NX)	2.333	87-90	1	
18E	068426	38342-21X00	Left Axle - PULSAR (NX)	2.250	87-90	1	
17A	068425	38342-03E01	Right Axle - AXXESS 2WD	2.333	90-93	1	
18E	068426	38342-21X00	Left Axle - AXXESS	2.250	87-90	1	

SEALING RINGS

ILL	ALTO No.	REF No.	Description	Spec	Year	Qty	Notes
KT	068600	NA	Sealing Ring Kit - 9T		85-94	1	
19A	068100	31361-21X00	Stator Support - Reverse drum		85-94	2	
20A	068101	31558-21X00	Stator Support - Direct drum		85-94	2	
21A	068102	31366-21X04	Pump Slide		85-94	1	
22F	068103	31313-21X01	Bearing Retainer to Low clutch		85-94	2	
23F	068104	31487-21X00	Output Shaft		85-94	2	

BUSHINGS

ILL	ALTO No.	REF No.	Description	Spec	Year	Qty	Notes
KT	068625	NA	Bushing Kit		85-94	1	
24A	068200	31343-21X01	Converter Housing		85-94	1	
N I	068201	31354-21X01	Oil Pump shaft - Front		85-94	1	
N I	068202	31352-21X00	Oil Pump shaft - Center		85-94	1	
N I	068203	31363-21X01	Oil Pump shaft - Rear		85-94	1	
N I	068204	31483-21X01	Output Shaft		85-94	1	

NISSAN

RE4F03A/V, RL4F03A/V 1991-03
RE4F03B 2000-05

A>

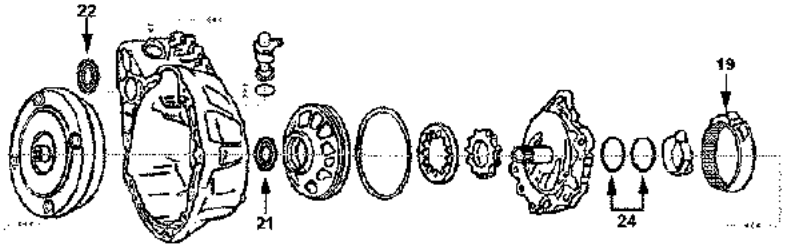

B>

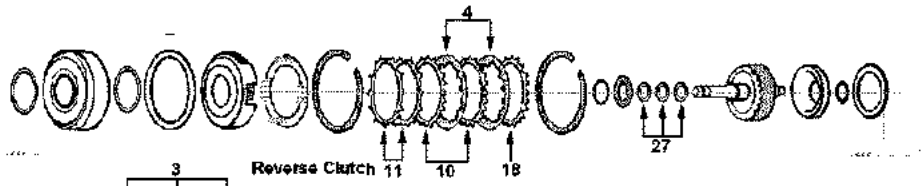

C>

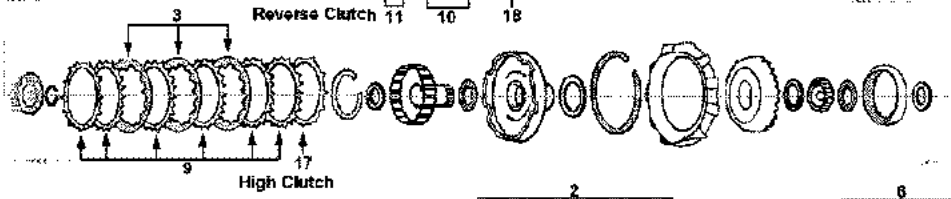

D>

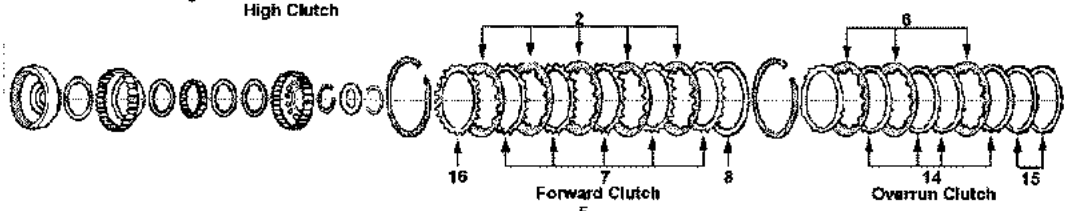

E>

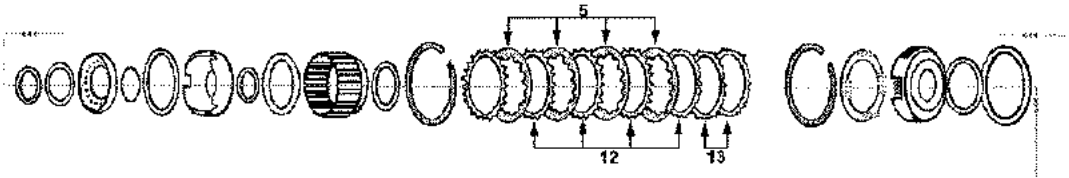

F>

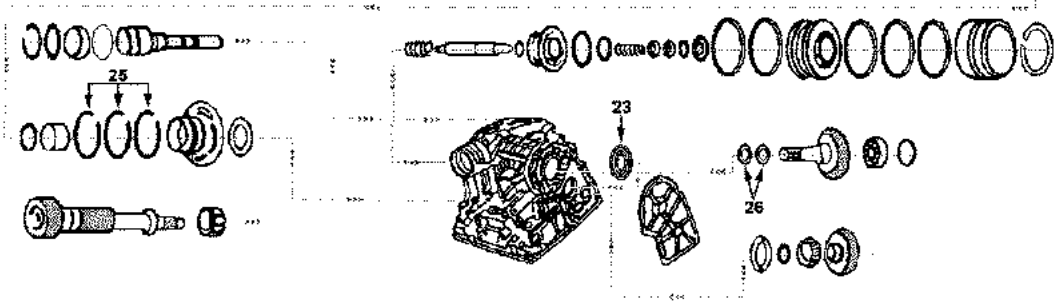

G>

H>

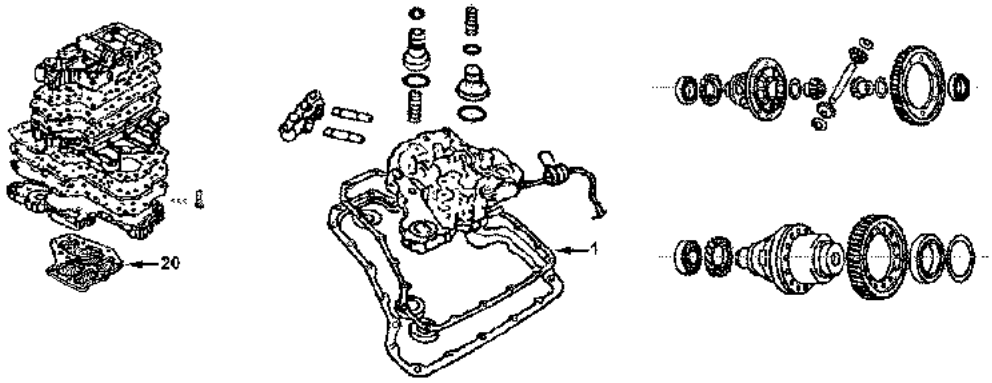

NISSAN

RE4F03A/V, RL4F03A/V 1991-03
RE4F03B 2000-05

KITS

*Add Suffix SK for Super Kit

ILL	Description	Years	Friction Module	Steel Module	Overhaul Kit	Banner Kit	Master Kit
KT	Rebuilding Kit - 1.6L engine	91-94	107752	107753	107800	107901LS	107901
KT	Rebuilding Kit - 1.6L engine	95-On	107752A	107753	107800	107901ALS	107901A
KT	Rebuilding Kit - 2.0L engine	91-94	107752	107753A	107800	107901LS	107901B
KT	Rebuilding Kit - 2.0L engine	95-On	107752A	107753A	107800	107901ALS	107901C

MISCELLANEOUS GASKETS & KIT COMPONENTS

ILL	ALTO No.	REF No.	Description	Spec	Year	Qty	Notes
1H	107816	31397-31X02	Gasket, Oil Pan	Cork/Rub	91-On	1	

FRICTION CLUTCHES

ILL	ALTO No.	REF No.	Description	Spec	Year	Qty	Notes
2D	107700	31532-31X02	Forward	.071/1.8	91-On	5	HEG - 30T - OD: 4.976" - PL
3C	107702A	31532-31X01	High - 1.6L engine	.078/2.0	91-On	4	HEG - 20T - OD: 4.096" - PL
3C	107702	31532-31X08	High - 2.0L engine	.063/1.6	91-On	4	HEG - 20T - OD: 4.096" - PL
4B	107704	31532-31X00	Reverse	.077/1.95	91-On	2	HEG - 18T - OD: 5.142" - PL
5E	107706	31532-31X04	Low / Reverse	.077/1.95	91-94	5	HEG - 30T - OD: 5.906" - PL
5E	107706A200	31532-31X10	Low / Reverse	.078/2.0	95-On	5	HEG - 30T - OD: 5.906" - PL
6D	107708	31532-31X16	Overrun	.063/1.6	91-On	3	HEG - 18T - OD: 4.608" - PL

STEEL CLUTCHES

ILL	ALTO No.	REF No.	Description	Spec	Year	Qty	Notes
7D	107701	31536-31X14	Forward	.078/2.0	91-On	5	30T - ID: 4.262"
8D	TBA	31535-31X02	Forward - dish		91-On	1	30T - ID: 4.262"
9C	107703	31536-31X12	High - 1.6L engine	.078/2.0	91-On	5-6	18T - ID: 3.425"
9C	107703	31536-31X12	High - 2.0L engine	.078/2.0	91-On	1	18T - ID: 3.425"
9C	107703-150	31536-31X13	High - 2.0L engine	.059/1.5	91-On	5	18T - ID: 3.425"
10C	107705	31536-31X15	Reverse	.078/2.0	91-On	2	30T - ID: 5.649"
11C	TBA	31535-31X11	Reverse - dish		91-On	2	30T - ID: 5.649"
12E	107707	31666-31X03	Low / Reverse	.078/2.0	91-On	5	10T - ID: 5.477"
13E	107767	31535-31X10	Low / Reverse - dish		91-On	2	5T - ID: 5.532"
14D	107709	31536-31X16	Overrun	.078/2.0	91-On	5	6T - ID: 4.138"
15D	TBA	31535-31X03	Overrun - dish		91-On	1-2	6T - ID: 4.138"

PRESSURE PLATES

ILL	ALTO No.	REF No.	Description	Spec	Year	Qty	Notes
16D	107760-360	31537-31X60	Forward backing - selective	3.60	91-On	AR	
16D	107760-380	31537-31X61	Forward backing - selective	3.80	91-On	AR	
16D	107760-400	31537-31X62	Forward backing - selective	4.00	91-On	AR	
16D	107760-420	31537-31X63	Forward backing - selective	4.20	91-On	AR	
16D	107760-440	31537-31X64	Forward backing - selective	4.40	91-On	AR	
16D	107760-460	31537-31X65	Forward backing - selective	4.60	91-On	AR	
17C	107761-335	NA	High backing - selective	3.35	91-On	AR	
17C	107761-395	31537-32X01	High backing - selective	3.95	91-On	AR	
17C	107761-415	31537-32X02	High backing - selective	4.15	91-On	AR	
17C	107761-435	31537-32X03	High backing - selective	4.35	91-On	AR	
17C	107761-455	31537-32X04	High backing - selective	4.55	91-On	AR	
17C	107761-475	31537-32X05	High backing - selective	4.75	91-On	AR	
18B	TBA	31537-31X00	Reverse backing - selective	4.40	91-On	AR	
18B	TBA	31537-31X01	Reverse backing - selective	4.60	91-On	AR	
18B	TBA	31537-31X02	Reverse backing - selective	4.80	91-On	AR	

NISSAN

RE4F03A/V, RL4F03A/V 1991-03
RE4F03B 2000-05

PRESSURE PLATES

ILL	ALTO No.	REF No.	Description	Spec	Year	Qty	Notes
18B	TBA	31537-31X03	Reverse backing - selective	5.00	91-On	AR	
18B	TBA	31537-31X04	Reverse backing - selective	5.20	91-On	AR	

BANDS

ILL	ALTO No.	REF No.	Description	Spec	Year	Qty	Notes
19A	107950	31630-31X01	Brake	Tan	91-On	1	

FILTERS

ILL	ALTO No.	REF No.	Description	Spec	Year	Qty	Notes
20H	107940	31728-31X01	Filter		91-On	1	
N I	107551	31726-41X00	Filter - VB thimble		91-On	1	

METAL CLAD SEALS

ILL	ALTO No.	REF No.	Description	Spec	Year	Qty	Notes
21A	107400	31375-31X00	Front Pump		91-On	1	
N I	107420	31375-31X01	Manual Lever		91-On	1	
N I	042410A	32709-58S00	Speedometer	.637	91-On	1	
22A	107425	38342-31X00	Right Axle - 1.6L	2.220	91-On	1	Large ID
22A	107425A	38342-31X01	Right Axle - 2.0L	2.220	91-On	1	Small ID
23G	107425	38342-31X00	Left Axle - 1.6L	2.220	91-On	1	
23G	107425	38342-31X00	Left Axle - 2.0L with viscous coupling	2.220	91-On	1	
23G	107427	38342-31X02	Left Axle - 2.0L without viscous coupling	3.560	91-On	1	

SEALING RINGS

ILL	ALTO No.	REF No.	Description	Spec	Year	Qty	Notes
KT	107600	E511	Sealing Ring Kit - 2M / 12T		91-On	1	
24A	107100	31525-31X11	Stator Support (Reverse drum)	Metal	91	2	
24A	107110	31525-31X12	Stator Support (Reverse drum)	Teflon	92-On	2	
25G	107101	31525-31X03	Bearing Retainer (Forward/Overrun drum)	Teflon	91-On	3	
26G	107102	31525-31X04	Output shaft - 1.6L engine	Teflon	91-On	2	
26G	107103	31525-31X05	Output shaft - 2.0L engine	Teflon	91-On	2	
27B	107104	31525-31X02	Input shaft	Teflon	91-On	3	

ELECTRONIC CONTROL COMPONENTS

ILL	ALTO No.	REF No.	Description	Spec	Year	Qty	Notes
N I	107501	31940-33X02	Solenoid Assembly		93-98	1	
N I	107503X	31935-8E006	RE4F03A Speed Sensor	Aftermarket	93-98	1	

NISSAN

RE4F04A/V/B 1992-On
FORD - 4F20E 1992-On

A>

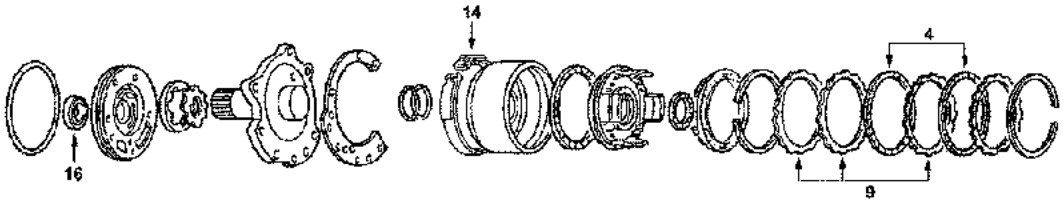

Reverse Clutch

B>

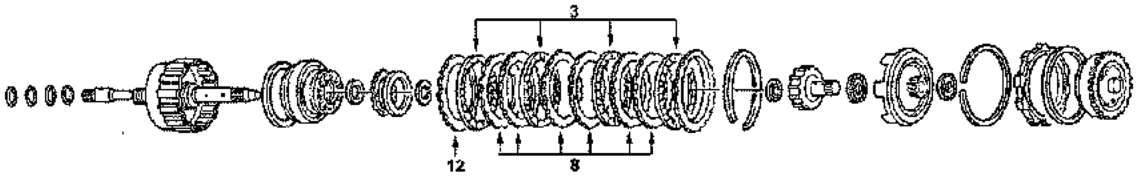

High Clutch

C>

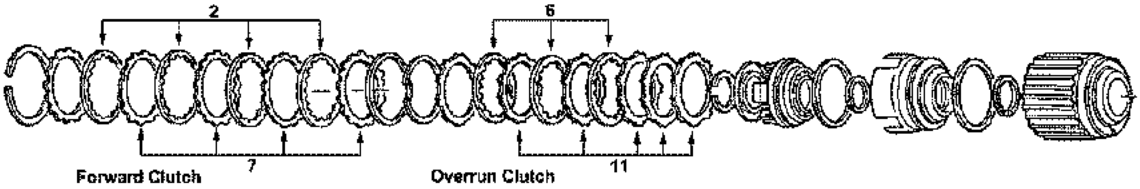

Forward Clutch

Overrun Clutch

D>

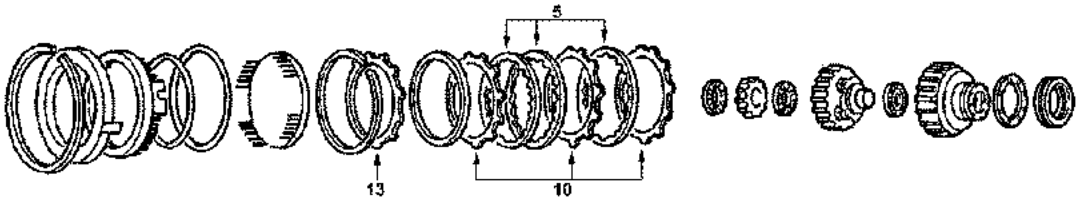

Low/Reverse Clutch

E>

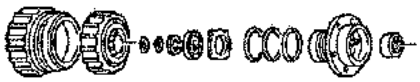

F>

G>

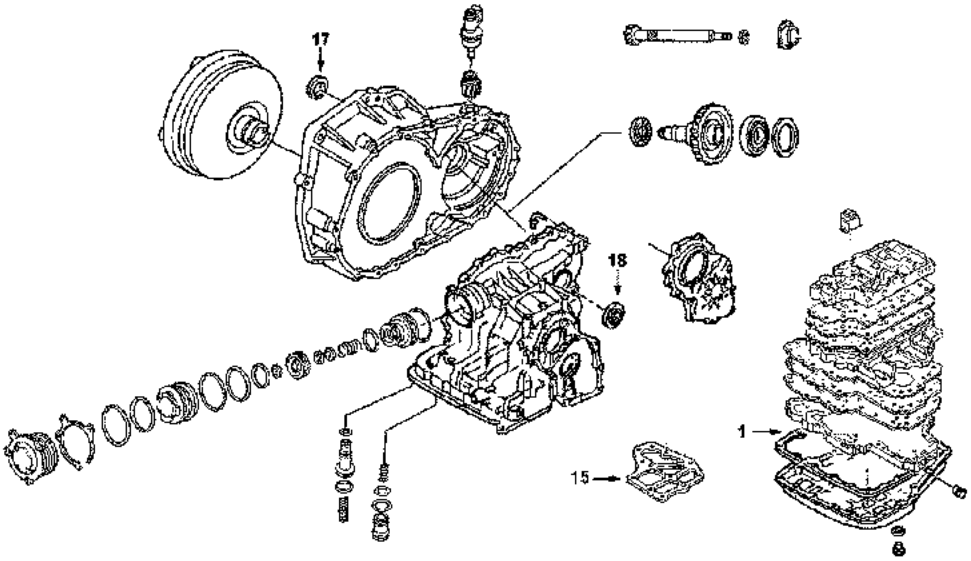

NISSAN

RE4F04A/V/B 1992-On

FORD - 4F20E 1992-On

KITS

*Add Suffix SK for Super Kit

ILL	Description	Years	Friction Module	Steel Module	Overhaul Kit	Banner Kit	Master Kit
KT	Rebuilding Kit - RE4R04A	92-02	105752A	105753A	105802	105903LS	105903
KT	Rebuilding Kit - RE4F04A	03-On	105752D	105753D	105802	105903ALS	105903A
KT	Rebuilding Kit - RE4F04B with Molded Pistons	00-06	105752D	105753D	105802B	105903BLS	105903B
KT	Rebuilding Kit - RE4F04B without Molded Pistons	00-06	105752D	105753D	105802BX	105903BXLS	105903BX

MISCELLANEOUS GASKETS & KIT COMPONENTS

ILL	ALTO No.	REF No.	Description	Spec	Year	Qty	Notes
1G	105818	31397-80X01	Gasket, Oil Pan	Cork/Rub	92-On	1	

FRICTION CLUTCHES

ILL	ALTO No.	REF No.	Description	Spec	Year	Qty	Notes
2C	105700	31532-80X02	Forward	.063/1.6	92-On	5	HEG - 32T - OD: 5.424" - PL
3B	105702	31532-80X05	High	.063/1.6	92-94	4	HEG - 21T - OD: 4.416" - PL
3B	105702B	31532-80X10	High	.063/1.6	95-02	4	HEG - 24T - OD: 4.416" - PL
4A	105704	31532-80X06	Reverse	.063/1.6	92-02	2	HEG - 28T - OD: 5.480" - PL
4A	105704A160	31532-89X00	Reverse	.063/1.6	00-On	2	HEG - 28T - OD: 5.800" - PL
5D	105706-180	31662-88X03	Low / Reverse	.071/1.8	92-On	6-7	HEG - 32T - OD: 6.455" - PL
6C	105708	31532-80X16	Overrun	.063/1.6	92-On	3	HEG - 20T - OD: 4.940" - PL

STEEL CLUTCHES

ILL	ALTO No.	REF No.	Description	Spec	Year	Qty	Notes
7C	105701	31536-80X08	Forward	.071/1.8	92-On	5	32T - ID: 4.928"
8B	105703-140	31536-80X14	High	.055/1.4	92-On	6	28T - ID: 3.610"
8B	105703-200	31536-80X13	High	.078/2.0	92-On	1	28T - ID: 3.610"
9A	105705	31536-80X09	Reverse	.071/1.8	92-02	2	30T - ID: 4.957"
9A	105705B180	31536-89X00	Reverse	.071/1.8	00-On	2	32T - ID: 4.957"
10D	105707	31666-80X03	Low / Reverse	.071/1.8	92-On	6-8	10T - ID: 5.905"
11C	105709	31536-80L04	Overrun	.063/1.6	92-On	5	8T - ID: 4.447"

PRESSURE PLATES

ILL	ALTO No.	REF No.	Description	Spec	Year	Qty	Notes
12B	105761-310	31537-81X10	High - backing	.122/3.1	92-On	AR	
12B	105761-330	31537-81X11	High - backing	.130/3.3	92-On	AR	
12B	105761-350	31537-81X12	High - backing	.138/3.5	92-On	AR	
12B	105761-370	31537-81X13	High - backing	.146/3.7	92-On	AR	
12B	105761-400	31537-81X14	High - backing	.157/4.0	92-On	AR	
13D	105707-200	31667-80X00	Low / Reverse - apply	.078/2.0	92-On	AR	
13D	105707-220	31667-80X01	Low / Reverse - apply	.086/2.2	92-On	AR	
13D	105707-240	31667-80X02	Low / Reverse - apply	.095/2.4	92-On	AR	
13D	105707-260	31667-80X03	Low / Reverse - apply	.102/2.6	92-On	AR	
13D	105707-280	31667-80X04	Low / Reverse - apply	.110/2.8	92-On	AR	
13D	105707-300	31667-80X05	Low / Reverse - apply	.118/3.0	92-On	AR	
13D	105707-320	31667-80X06	Low / Reverse - apply	.126/3.2	92-On	AR	
13D	105707-340	31667-80X07	Low / Reverse - apply	.134/3.4	92-On	AR	
N I	105705A272	NA	DrumSaver® Comp - Reverse Cushion Spring		92-On	1	Wave
N I	105705-272	NA	DrumSaver® Comp - Reverse Spacer Plate		92-On	1	

NISSAN

RE4F04A/V/B 1992-On

FORD - 4F20E 1992-On

OEI® Original Equipment Improvements

ILL	ALTO No.	REF No.	Description	Spec	Year	Qty	Notes
N I	105757X	NA	DrumSaver® Kit - Reverse Drum		92-On	1	
N I	075986A	NA	Shift Kit®	Transgo®	92-On	1	

BANDS

ILL	ALTO No.	REF No.	Description	Spec	Year	Qty	Notes
14A	105952	31630-80X02	Brake	Tan	92-On	1	
14A	105952A	31630-80X05	Brake RE4F04V		92-On	1	

FILTERS

ILL	ALTO No.	REF No.	Description	Spec	Year	Qty	Notes
15G	105942	31728-80X03	Filter		92-On	1	
15G	105942A	31728-80X04	Filter		97-On	1	
N I	105942B	31728-85X01	Filter - Altima, Maxima		02-On	1	
N I	105942C	31872-85X0A	Filter - round inlet tube		05-On	1	

METAL CLAD SEALS

ILL	ALTO No.	REF No.	Description	Spec	Year	Qty	Notes
16A	068400	31344-21X00	Front Pump		92-On	1	
17F	068425	38342-03E01	Right Axle	2.335	92-On	1	
18F	105425	38342-03E00	Left Axle without viscous coupling	2.335	92-On	1	
18F	068426A	38342-80X00	Left Axle with viscous coupling	3.560	92-On	1	
N I	TBA	38342-81X00	Axle (case side) RE4F04B		00-06	1	
N I	TBA	38342-81X01	Axle (conv side) RE4F04B		00-06	1	

SEALING RINGS

ILL	ALTO No.	REF No.	Description	Spec	Year	Qty	Notes
KT	105600	E512	Sealing Ring Kit - 2M / 10T		92-On	1	

MOLDED PISTONS

ILL	ALTO No.	REF No.	Description	Spec	Year	Qty	Notes
KT	105670	NA	Piston Kit- RE4F04B			1	2 pistons

NISSAN

Nissan, Mitsubishi, Hyundai, Kia, Renault

JF613E (Renault AJ0) 2007-On

KITS

ILL	Description	Years	Friction Module	Steel Module	Overhaul Kit	Banner Kit	Master Kit
KT	Rebuilding Kit with Molded Pistons	07-On	218752	218753	218800	218901LS	218901
KT	Rebuilding Kit without Molded Pistons	07-On	218752	218753	218800X	218901XLS	218901X

FRICTION CLUTCHES

ILL	ALTO No.	REF No.	Description	Spec	Year	Qty	Notes
N I	218700-140	NA	2-6 Brake	.055/1.40	07-On	4	HEG- 36T - OD: 8.150"
N I	218702-163	NA	3-5 Reverse	.064/1.63	07-On	4	HEG- 36T - OD: 6.258"
N I	218704-142	NA	High	.056/1.42	07-On	5	HEG- 36T - OD: 6.175"
N I	218706-152	NA	Low/Reverse	.060/1.52	07-On	4	HEG- 36T - OD: 8.072"
N I	218708-140	NA	Low	.055/1.40	07-On	4	HEG- 36T - OD: 6.053"- Groove

STEEL CLUTCHES

ILL	ALTO No.	REF No.	Description	Spec	Year	Qty	Notes
N I	218701-221	NA	2-6 Brake	.087/2.21	07-On	3	17T - ID: 7.165"
N I	218703-239	NA	3-5 Reverse	.094/2.39	07-On	4	48T - ID: 5.296"
N I	218705-198	NA	High	.078/1.98	07-On	5	36T - ID: 5.142"
N I	218707-178	NA	Low/Reverse	.070/1.78	07-On	4	17T - ID: 7.565"
N I	218709-178	NA	Low	.070/1.78	07-On	4	48T - ID: 5.221"

MOLDED PISTONS

ILL	ALTO No.	REF No.	Description	Spec	Year	Qty	Notes
KT	218670	NA	Piston Kit		07-On	1	2 pistons

RENAULT

MB101 / MB1, MB3, ML1 - FWD (Transaxle)
MJ1, MJ3, MJ5 - FWD (Inline)

A>

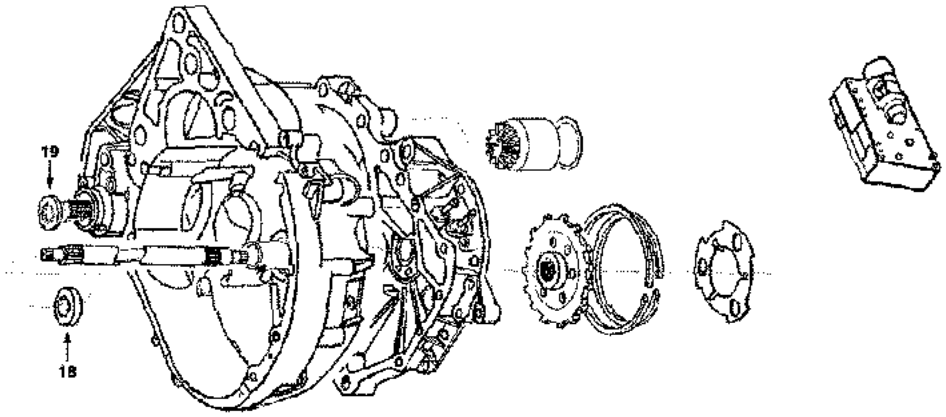

B>

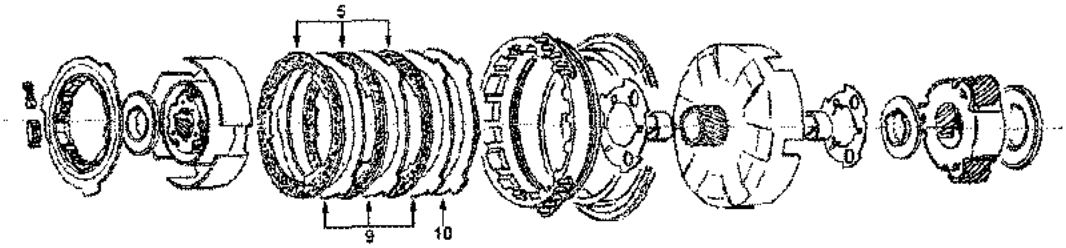

C>

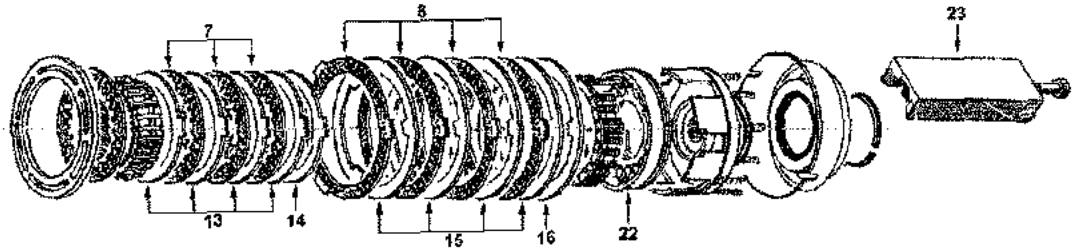

D>

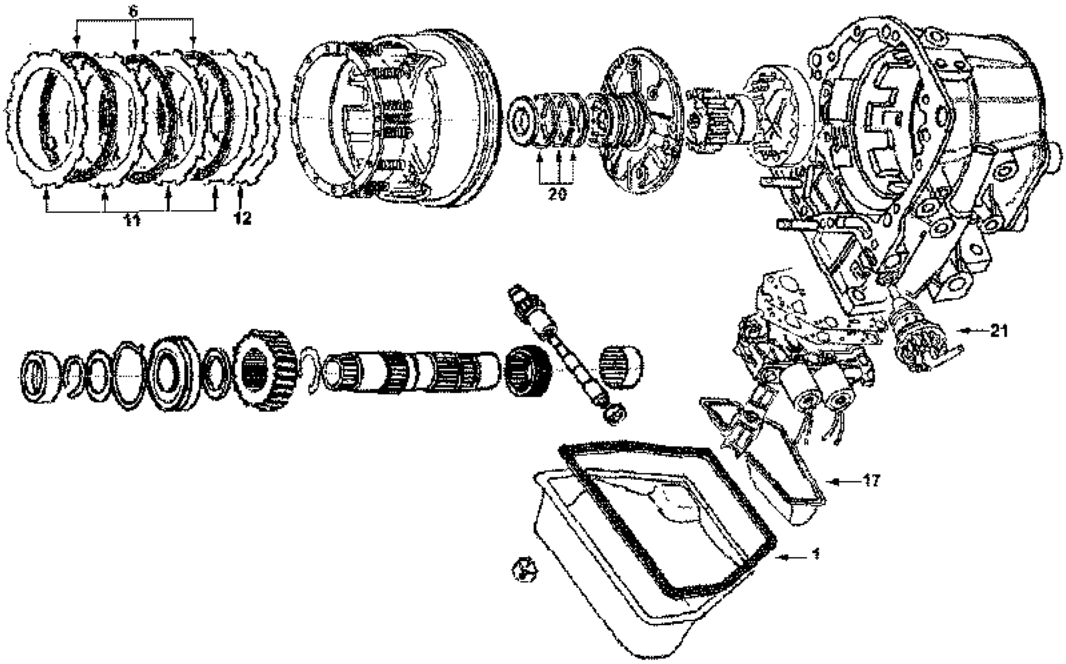

RENAULT

MB101 / MB1, MB3, ML1 - FWD (Transaxle)
MJ1, MJ3, MJ5 - FWD (Inline)

KITS

*Add Suffix SK for Super Kit

ILL	Description	Years	Friction Module	Steel Module	Overhaul Kit	Banner Kit	Master Kit
KT	Rebuilding Kit - MB101 without E1/E2	83-90	066752A	066753A	066800A	066901LS	066901
KT	Rebuilding Kit - MB101 with E1/E2 (Flat Steels Only)	83-90	066752B	066753B	066800	066903LS	066907
KT	Rebuilding Kit - MB101 with E1/E2 (Flat & Wave Steels)	83-90	066752B	066753	066800	066903LS	066903
KT	Rebuilding Kit - MJ3, MJ5	86-90	066752B	066753	066802	066905LS	066905

MISCELLANEOUS GASKETS & KIT COMPONENTS

ILL	ALTO No.	REF No.	Description	Spec	Year	Qty	Notes
1D	066818	7700-680-106	Gasket, Oil Pan	M.Rubber	83-90	1	

FRICTION CLUTCHES

ILL	ALTO No.	REF No.	Description	Spec	Year	Qty	Notes
5B	066702	7701-635-538	Front	.078/2.0	83-90	4	Tan - 3T - OD: 7.486" - SM
6D	066700	7701-635-537	Rear	.078/2.0	83-90	4-5	Tan - 3T - OD: 7.006" - SM
7C	066704	NA	E1	.078/2.0	83-90	4-5	Tan - 21T - OD: 4.841" - PL
8C	066706	NA	E2	.078/2.0	83-90	4-5	Tan - 3T - OD: 6.158" - PL

STEEL CLUTCHES

ILL	ALTO No.	REF No.	Description	Spec	Year	Qty	Notes
9B	066703	7701-463-363	Front - Flat	.059/1.5	83-90	5	3T - ID: 6.739"
10B	066713	NA	Front - Wave	.059/1.5	83-90	1	3T - ID: 6.739"
11D	066701	7701-463-364	Rear - Flat	.059/1.5	83-90	3-4	12T - ID: 7.006"
12D	066711	NA	Rear - Wave	.059/1.5	83-90	1	12T - ID: 7.006"
13C	066705	NA	E1 - Flat	.059/1.5	83-90	4	3T - ID: 4.291"
14C	066715	NA	E1 - Wave	.059/1.5	83-90	1	3T - ID: 4.291"
15C	066707	NA	E2 - Flat	.059/1.5	83-90	4	3T - ID: 4.965"
16C	066717	NA	E2 - Wave	.059/1.5	83-90	1	3T - ID: 4.965"

FILTERS (add Prefix FK for FILTER KIT)

ILL	ALTO No.	REF No.	Description	Spec	Year	Qty	Notes
17D	066940	7700-712-751	Filter - MB1, MJ3		83-88	1	7700-727-43
17D	066942	7700-739-883	Filter - MJ5 (middle pickup)		86-90	1	
17D	066944	7700-723-786	Filter - MB1 (end pickup)		83-90	1	

METAL CLAD SEALS

ILL	ALTO No.	REF No.	Description	Spec	Year	Qty	Notes
18A	066400	7701-033-422	Front Pump - MB1	2.608	83-90	1	
18A	066402	7703-087-024	Front Pump - MJ3/MJ5	2.570	83-90	1	
19A	066425	7703-087-146	Axle - MB1	2.218	83-90	1	
N I	066425A	7703-087-142	Axle - MB1		83-90	1	
19A	066426	7703-087-106	Axle - MJ3 (tag # 760 & 761)	1.660	83-90	2	
19A	066427	7700-737-000	Right Axle - MJ3 (tag # 762)	1.785	83-90	1	
N I	066428	7700-736-999	Left Axle - MJ3 (tag # 762)	1.725	83-90	1	

SEALING RINGS

ILL	ALTO No.	REF No.	Description	Spec	Year	Qty	Notes
KT	066601	G718	Sealing Ring Kit - 3M		83-90	1	
20D	066100	7701-462-295	Pump Stator to E1/E2 clutch		83-90	3	

RENAULT

4139 / ML1 - FWD (Inline)

1973-89

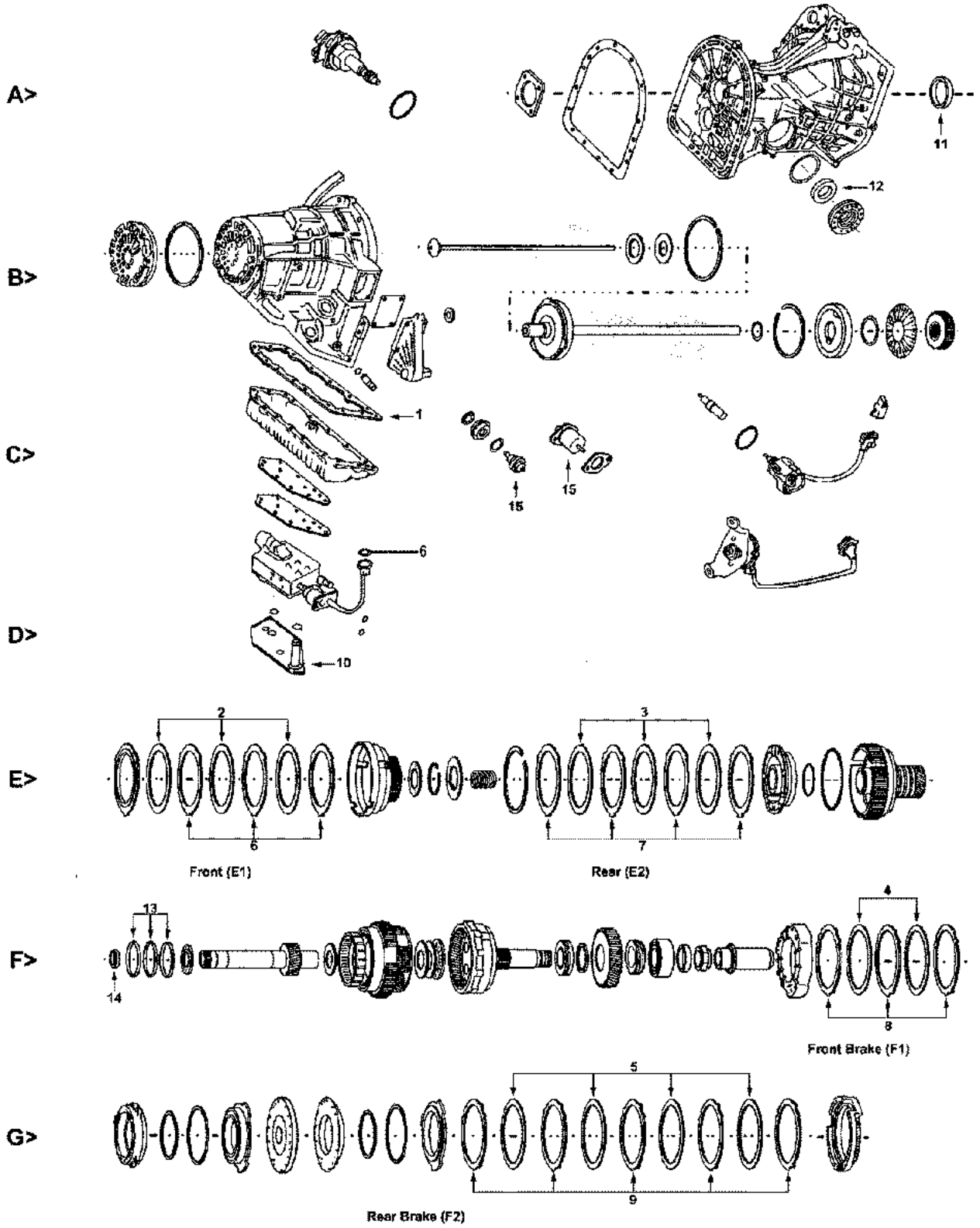

RENAULT

4139 / ML1 - FWD (Inline)

1973-89

KITS

*Add Suffix SK for Super Kit

ILL	Description	Years	Friction Module	Steel Module	Overhaul Kit	Banner Kit	Master Kit
KT	Rebuilding Kit	73-89	072752	072753	072800	072901LS	072901

MISCELLANEOUS GASKETS & KIT COMPONENTS

ILL	ALTO No.	REF No.	Description	Spec	Year	Qty	Notes
1C	072816	7701-460-396	Gasket, Oil Pan	Fiber	73-89	1	
1C	072816A	NA	Gasket, Oil Pan - Fuego	Fiber	82-89	1	

FRICTION CLUTCHES

ILL	ALTO No.	REF No.	Description	Spec	Year	Qty	Notes
2E	029712	7701-452-915	Front (E1)	.061/1.55	73-89	2-3	Tan - 36T - OD: 4.248" - PL
3E	029712	7701-452-915	Rear (E2)	.061/1.55	73-89	2-3	Tan - 36T - OD: 4.248" - PL
4F	072700	7701-457-135	Front Brake (F1)	.061/1.55	73-89	3	Tan - 45T - OD: 6.081" - PL
5G	072700	7701-457-135	Rear Brake (F2)	.061/1.55	73-89	3	Tan - 45T - OD: 6.081" - PL

STEEL CLUTCHES

ILL	ALTO No.	REF No.	Description	Spec	Year	Qty	Notes
6E	072703	7701-452-915	Front (E1)	.059/1.5	73-89	3	3T - ID: 3.110"
7E	072703	7701-452-915	Rear (E2)	.059/1.5	73-89	3	3T - ID: 3.110"
6/7E	072713	NA	Front (E1) & Rear (E2) - selective	.100/2.55	73-89	AR	3T - ID: 3.110"
8F	072701	7701-457-135	Front Brake (F1)	.059/1.5	73-89	3	3T - ID: 4.977"
9G	072701	7701-457-135	Rear Brake (F1)	.059/1.5	73-89	4	3T - ID: 4.977"
8F	072711	NA	F1 & F2 - selective	.078/2.0	73-89	AR	3T - ID: 4.977"

FILTERS

ILL	ALTO No.	REF No.	Description	Spec	Year	Qty	Notes
10D	072940	7700-730-181	Filter		73-89	1	

METAL CLAD SEALS

ILL	ALTO No.	REF No.	Description	Spec	Year	Qty	Notes
11A	066402	7703-087-024	Converter Housing - some	66mm	73-89	1	
11A	072400	NA	Converter Housing - some	60mm	73-89	1	
12A	066425	7703-087-146	Axle (Differential)	54mm	73-89	2	
12A	066426	7703-087-106	Axle (Differential)	42mm	73-89	2	

SEALING RINGS

ILL	ALTO No.	REF No.	Description	Spec	Year	Qty	Notes
KT	072600	NA	Sealing Ring Kit - 4M		73-89	1	
13F	072100	7700-676-814	Output shaft to Rear Brake - large		73-89	3	
14F	072101	7700-676-813	Output shaft to Rear Brake - small		73-89	1	

RENAULT

4141 Delorean, Alpine
Zimmer Motor Home 1981-On

A>

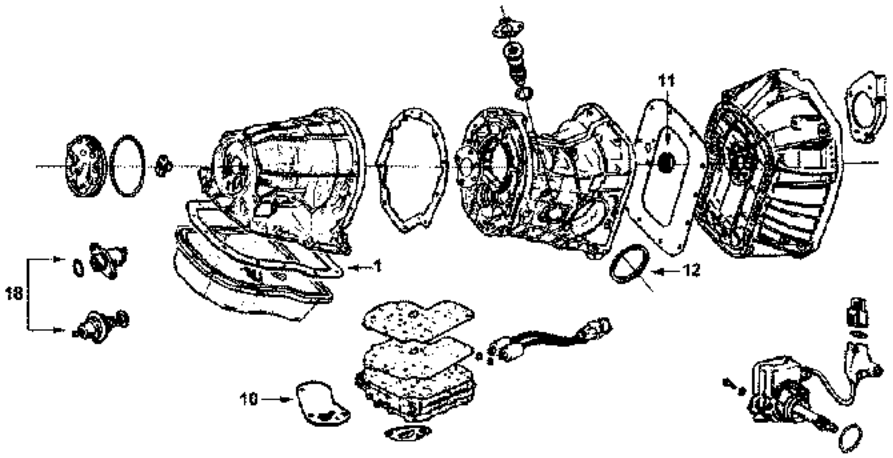

B>

C>

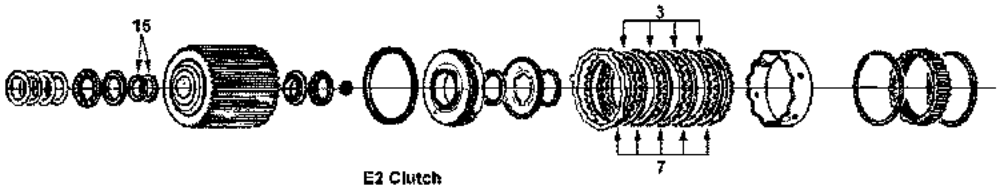

D>

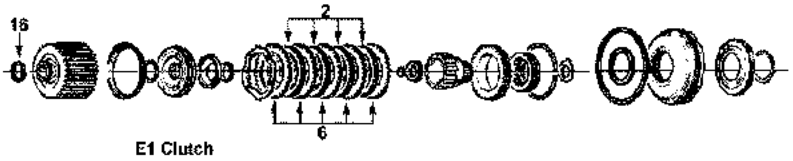

E>

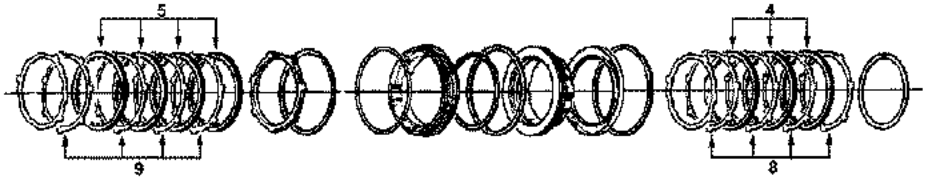

F>

G>

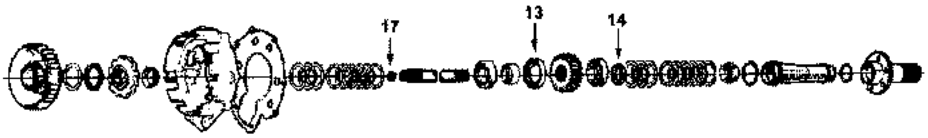

RENAULT

4141 Delorean, Alpine
Zimmer Motor Home 1981-On

KITS

*Add Suffix SK for Super Kit

ILL	Description	Years	Friction Module	Steel Module	Overhaul Kit	Banner Kit	Master Kit
KT	Rebuilding Kit	81-On	072752A	072753A	072802	072903LS	072903

MISCELLANEOUS GASKETS & KIT COMPONENTS

ILL	ALTO No.	REF No.	Description	Spec	Year	Qty	Notes
1A	072818	NA	Gasket, Oil Pan	Cork/Rub	81-On	1	

FRICTION CLUTCHES

ILL	ALTO No.	REF No.	Description	Spec	Year	Qty	Notes
2D	038700	NA	E1 (3rd)	.098/2.5	81-On	4	Tan - 12T - OD: 3.872" - SM
3C	038702	NA	E2 (2nd)	.098/2.5	81-On	4	Tan - 30T - OD: 5.224" - SM
4E	038704	NA	F1	.098/2.5	81-On	3	Tan - 36T - OD: 6.405" - SM
5E	038704	NA	F2	.098/2.5	81-On	4	Tan - 36T - OD: 6.405" - SM

STEEL CLUTCHES

ILL	ALTO No.	REF No.	Description	Spec	Year	Qty	Notes
6D	038701	NA	E1 (3rd)	.078/2.0	81-On	5	30T - ID: 2.848"
7C	038703	NA	E2 (2nd)	.078/2.0	81-On	5	36T - ID: 4.303"
8E	038705	NA	F1	.083/2.1	81-On	4	7T - ID: 5.429"
9E	038705	NA	F2	.083/2.1	81-On	4	7T - ID: 5.429"

METAL CLAD SEALS

ILL	ALTO No.	REF No.	Description	Spec	Year	Qty	Notes
11A	072402	NA	Converter Housing	70mm	81-On	1	
12A	072425	NA	Differential - Metal case	58mm	81-On	1	
12A	072425A	NA	Differential - Rubber case	58mm	81-On	1	
13G	072403	NA	Planetary shaft	65mm	81-On	1	
14G	072404	NA	Planetary shaft	42mm	81-On	1	

SEALING RINGS

ILL	ALTO No.	REF No.	Description	Spec	Year	Qty	Notes
KT	072601	NA	Sealing Ring Kit - 4M		81-On	1	
15C	TBA	NA	E2 drum		81-On	2	
16D	072103	NA	E1 drum - outer		81-On	1	
17G	072104	NA	Mainshaft to E1 drum		81-On	1	

MODULATORS

ILL	ALTO No.	REF No.	Description	Spec	Year	Qty	Notes
18A	072502	NA	Clamp type		81-On	1	
18A	072503	NA	Screw in		81-On	1	

RENAULT

AR4, AD4, AD8

1988-On

A>

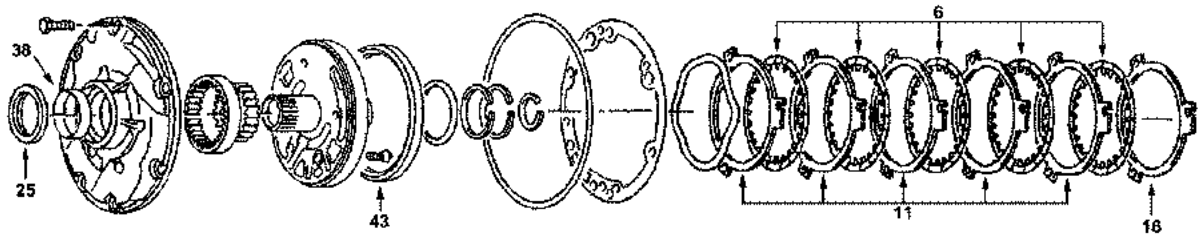

B2 (2-4 Clutch)

B>

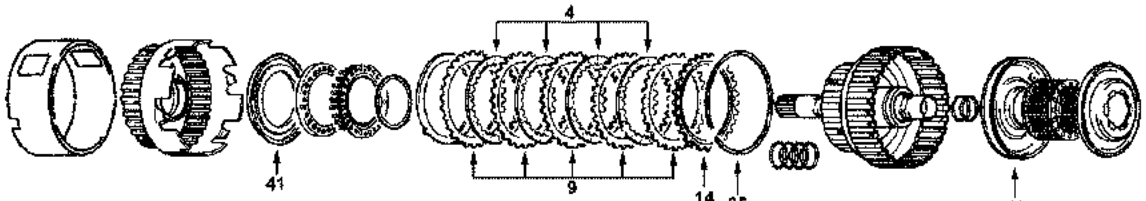

K2 (Reverse Clutch)

C>

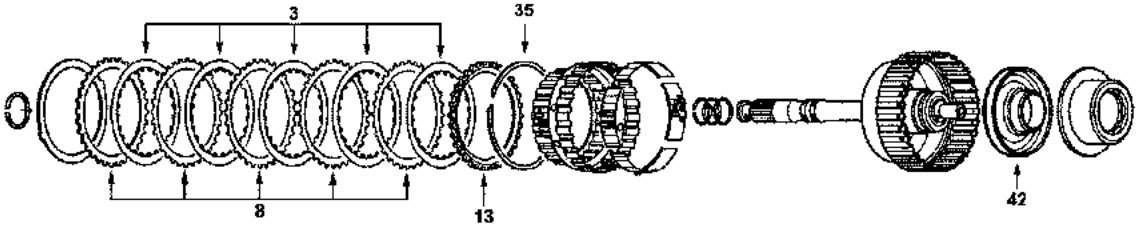

K1 (1-3 Clutch)

D>

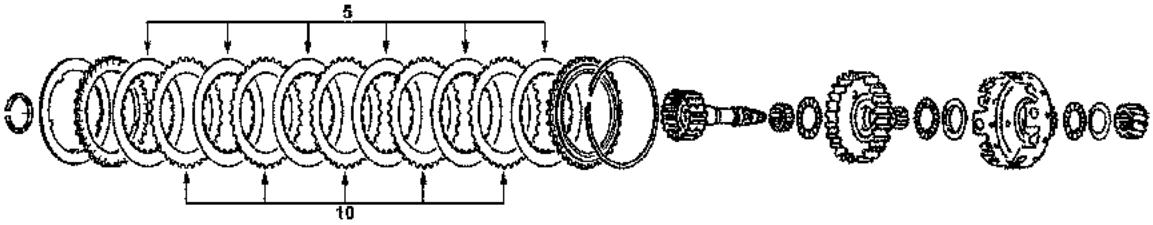

K3 (3-4 Clutch)

E>

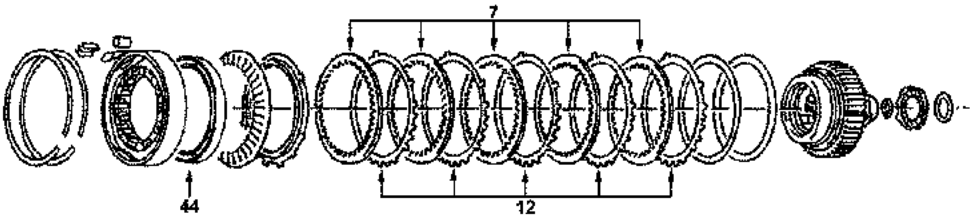

B1 (Low / Reverse Clutch)

RENAULT
AR4, AD4, AD8
1988-On

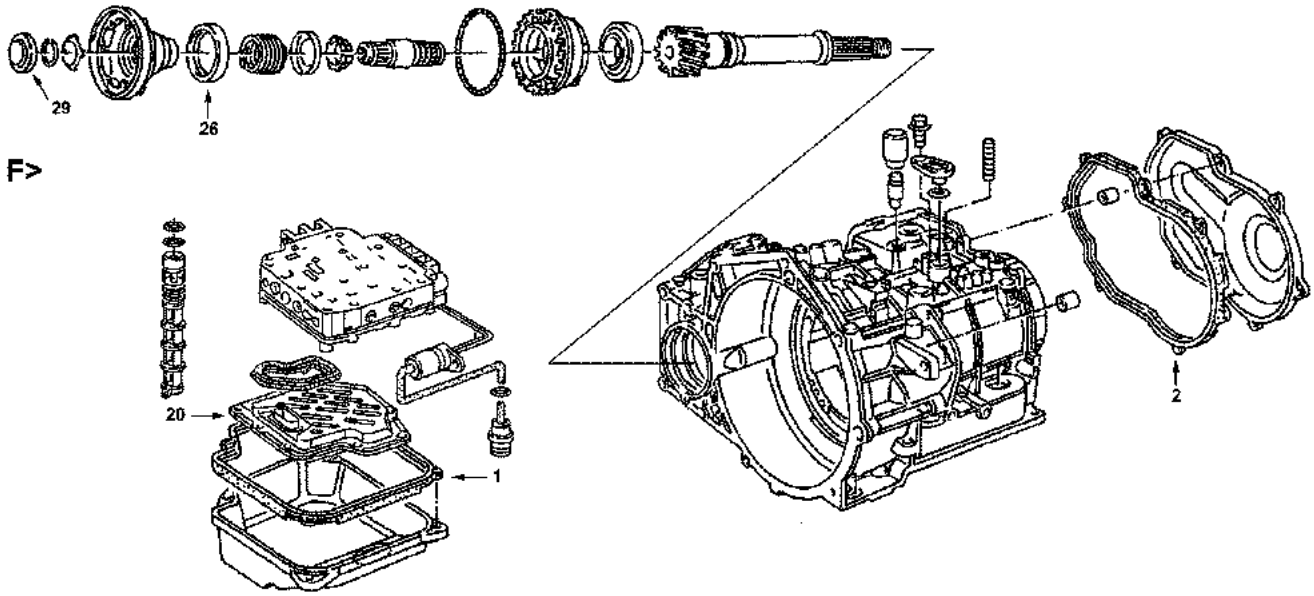

KITS

***Add Suffix SK for Super Kit**

ILL	Description	Years	Friction Module	Steel Module	Overhaul Kit	Banner Kit	Master Kit
KT	Rebuilding Kit - AR4 with Molded pistons	88-On	109752B	109753B	109804	109905LS	109905
KT	Rebuilding Kit - AR4 without Molded pistons	88-On	109752B	109753B	109804A	109905ALS	109905A
KT	Rebuilding Kit - AD4 with Molded pistons	90-On	109752F	109753F	109804B	109905BLS	109905B
KT	Rebuilding Kit - AD4 without Molded pistons	90-On	109752F	109753F	109804C	109905CLS	109905C
KT	Rebuilding Kit - AD8 with Molded pistons	90-On	109752B	109753B	109804D	109905DLS	109905D
KT	Rebuilding Kit - AD8 without Molded pistons	90-On	109752B	109753B	109804E	109905ELS	109905E

MISCELLANEOUS GASKETS & KIT COMPONENTS

ILL	ALTO No.	REF No.	Description	Spec	Year	Qty	Notes
1F	109818	7700-733-198	Gasket, Oil Pan - AR4	M.Rubber	88-On	1	
1F	109819	7700-863-737	Gasket, Oil Pan - AD4	M.Rubber	90-On	1	7700-735-752
1F	109820	7700-749-967	Gasket, Oil Pan - AD8	M.Rubber	90-On	1	
2F	109821	7700-735-572	Gasket, Rear Cover - AD4	M.Rubber	90-On	1	
KT	109672	NA	Kit, clips for K1/K3 drum		88-On	1	

FRICTION CLUTCHES

ILL	ALTO No.	REF No.	Description	Spec	Year	Qty	Notes
3C	109700	NA	K1 (Forward - 1st/3rd shift)	.063/1.6	88-On	4-5	Heg - 24T - OD: 4.800" - PL
4B	109700	NA	K2 (Reverse)	.063/1.6	88-On	4-5	Heg - 24T - OD: 4.800" - PL
5D	109716	NA	K3 (Overdrive - 3rd/4th shift)	.063/1.6	88-On	6-8	Heg - 22T - OD: 4.057" - PL
5D	109716-180	NA	K3 (Overdrive - 3rd/4th shift)	.071/1.8	90-On	6-7	Heg - 22T - OD: 4.057" - PL
6A	109702	NA	B2 (Front Brake - 2nd/4th shift)	.063/1.6	88-On	4-6	Tan - 32T - OD: 6.096" - PL
7E	109704	NA	B1 (Low / Reverse)	.063/1.6	88-On	4-6	Heg - 50T - OD: 5.743" - SM

RENAULT
AR4, AD4, AD8
1988-On

STEEL CLUTCHES

ILL	ALTO No.	REF No.	Description	Spec	Year	Qty	Notes
8C	109701	NA	K1 (Forward - 1st/3rd shift)	.078/2.0	88-95	4-5	32T - ID: 4.095"
8C	109701-145	NA	K1 (Forward - 1st/3rd shift)	.057/1.45	95-On	4-5	32T - ID: 4.095"
9B	109701	NA	K2 (Reverse)	.078/2.0	88-On	4-5	32T - ID: 4.095"
10D	109717	NA	K3 (Overdrive - 3rd/4th shift) - AR4 only	.078/2.0	88-On	5-7	28T - ID: 2.835"
10D	109717-160	NA	K3 (Overdrive - 3rd/4th shift)	.063/1.6	90-On	5-7	28T - ID: 2.835"
11A	109703	NA	B2 (Front Brake - 2nd/4th shift)	.078/2.0	88-On	5-7	3T - ID: 5.361"
12E	109705	NA	B1 (Low / Reverse)	.078/2.0	88-On	4-6	12T - ID: 5.078"

STEEL CLUTCHES - HI-PERFORMANCE - Kolene®

ILL	ALTO No.	REF No.	Description	Spec	Year	Qty	Notes
8C	109701K	NA	K1 (Forward - 1st/3rd shift)	.078/2.0	88-95	4-5	Kol - 32T - ID: 4.095"
8C	109701K145	NA	K1 (Forward - 1st/3rd shift)	.057/1.45	95-On	4-5	Kol - 32T - ID: 4.095"
9B	109701K	NA	K2 (Reverse)	.078/2.0	88-On	4-5	Kol - 32T - ID: 4.095"

PRESSURE PLATES

ILL	ALTO No.	REF No.	Description	Spec	Year	Qty	Notes
13C	109760	NA	K1 - selective (bevel)	.118/3.0	88-On	AR	
13C	109760A520	NA	K1 - selective (bevel)	.205/5.2	88-On	AR	
14B	109760	NA	K2 - selective (bevel)	.118/3.0	88-On	AR	
14B	109760A520	NA	K2 - selective (bevel)	.205/5.2	88-On	AR	
16A	109703-225	NA	B2 - selective (flat)	.089/2.25	88-On	AR	
16A	109703-250	NA	B2 - selective (flat)	.095/2.5	88-On	AR	
16A	109703-275	NA	B2 - selective (flat)	.108/2.75	88-On	AR	
16A	109703-300	NA	B2 - selective (flat)	.118/3.0	88-On	AR	

OEI® Original Equipment Improvements

ILL	ALTO No.	REF No.	Description	Spec	Year	Qty	Notes
KT	109757B	NA	PowerPack® - K-3 (3-4 Clutch)		88-On	1	

FILTERS (add Prefix FK for FILTER KIT)

ILL	ALTO No.	REF No.	Description	Spec	Year	Qty	Notes
20F	109942	7700-746-294	Filter - AR4		88-On	1	
20F	109944	7701-468-818	Filter - AD4 - Megane classic		90-On	1	
20F	109944A	7701-467-106	Filter - AD4 - Clio & Scenic		90-On	1	
20F	TBA	7701-467-105	Filter - AD8 (internal)		90-On	1	
N I	109946	7701-866-793	Filter - AD8		90-On	1	
20F	109948	7701-041-118	Filter - AD4, AD8 (external - spin on)		90-On	1	

METAL CLAD SEALS

ILL	ALTO No.	REF No.	Description	Spec	Year	Qty	Notes
25A	109400A	7703-087-157	Front Pump - All (Viton)	65mm	88-On	1	
26F	109427	7703-087-144	Left Axle - AR4	65mm	88-On	1	
26F	109425A	7703-087-142	Left Axle - AD4	65mm	90-On	1	
26F	109425B	7700-852-549	Left Axle - AD8 (with boot)	52mm	90-On	1	
N I	109426A	7703-087-143	Right Axle - AR4	48mm	88-On	1	
N I	109425A	7703-087-142	Right Axle - AD4	65mm	90-On	1	
N I	109404B	7703-067-154	Differential - AR4		88-On	1	
N I	109404A	7703-087-142	Differential - AD4		90-On	1	
29F	109405	7700-730-093	Differential Cover (cap)		90-On	2	

RENAULT
AR4, AD4, AD8
1988-On

SEALING RINGS

ILL	ALTO No.	REF No.	Description	Spec	Year	Qty	Notes
KT	109601	NA	Sealing Ring Kit		88-On	1	

BUSHINGS

ILL	ALTO No.	REF No.	Description	Spec	Year	Qty	Notes
38A	109200	NA	Front Pump		88-On	1	

MOLDED PISTONS

ILL	ALTO No.	REF No.	Description	Spec	Year	Qty	Notes
KT	109671E	NA	Molded Piston Kit - AR4		88-On	1	
KT	109671G	NA	Molded Piston Kit - AD4, AD8 (5 pistons)		90-On	1	
40B	109330	NA	K1 (Forward - 1st/3rd shift)	3.612	88-On	1	
41B	109332	NA	K2 (Reverse) - AR4	4.580	88-89	1	
41B	046317A	NA	K2 (Reverse) - AD4/AD8	4.337	90-On	1	
42C	109333B	7700-856-233	K3 (Overdrive - 3rd/4th shift)	3.550	88-On	1	
43A	109331A	7700-736-490	B2 (Front Brake - 2nd/4th shift)	5.750	88-On	1	
44E	109334	NA	B1 (Low / Reverse)	5.851	88-On	1	
N I	TBA	7700-859-596	Rear Cover - AD8	2.884	90-On	1	
N I	TBA	7700-869-101	Output Shaft - AD4 small ID	1.975	90-On	1	
N I	TBA	NA	Output Shaft - AD4 large ID	2.059	90-On	1	

RENAULT

RENAULT, CITROEN, PEUGEOT
AL4, DPO (STA) 1997-On

KITS

*Add Suffix SK for Super Kit

ILL	Description	Years	Friction and Steel Module	Overhaul Kit	Banner Kit	Master Kit
KT	Rebuilding Kit - with Molded Pistons	97-On	155750	155800	NA	155901
	Also includes wide square tooth reverse (Peugeot) clutches					
KT	Rebuilding Kit - without Molded Pistons	97-On	155750	155800X	NA	155901X
	Also includes wide square tooth reverse (Peugeot) clutches					
KT	Clutch Plate Module - (does not include	97-On	155750A			
	wide square tooth reverse (Peugeot) clutches)					

MISCELLANEOUS GASKETS & KIT COMPONENTS

ILL	ALTO No.	REF No.	Description	Spec	Year	Qty	Notes
N I	155001M	2109.59	Gasket, case		97-On	1	Large Metal
N I	155816	2209.4	Side Cover		97-On	1	
N I	155818	2209.41	Gasket, rear cover		97-On	1	

FRICTION CLUTCHES

ILL	ALTO No.	REF No.	Description	Spec	Year	Qty	Notes
N I	155700-160	7700-101-413	Reverse (1 sided) - internal spline	.063/1.6	97-On	3	HEG - 8T - OD:6.270" - PLNI
N I	155701-160	7700-408-236	Reverse (1 sided) - external spline	.063/1.6	97-On	3	HEG - 12T - ID:5.220" - PLNI
N I	155701A160	NA	Reverse (1 sided) - external spline wide (Peugeot)	.063/1.6	97-On	3	HEG - 12T - ID:5.220" - PLNI
N I	155702-160	7701-101-411	Brake (1 sided) - internal spline	.063/1.6	97-On	3	HEG - 6T - OD:6.720" - PLNI
N I	155703-160	7700-101-410	Brake (1 sided) - external spline	.063/1.6	97-On	3	HEG - 3T - ID: 5.750" - PLNI
N I	155704-160	7700-102-010	4th Clutch (1 sided) - internal spline	.063/1.6	97-On	7	HEG - 20T - OD:4.651 - PLNI
N I	155705-160	7700-101-427	4th Clutch (1 sided) - external spline	.063/1.6	97-On	7	HEG - 8T - ID:3.235" - PLNI

TORQUE CONVERTER - FRICTION RINGS AND CLUTCHES

ILL	ALTO No.	REF No.	Description	Spec	Year	Qty	Notes
N I	155714	NA	Torque Converter - external spline	.139/3.53	97-On	AR	Red - 24T - ID: 6.64" - SM
N I	155716	RE-CP-2	Torque Converter - external spline	.159/4.04	05-On	AR	Red - 24T - OD: 8.750"
N I	155718	RE-CP-3X	Torque Converter - external spline	.106/2.69	05-On	1	Red - 40T - ID: 7.361" - CUP

BANDS

ILL	ALTO No.	REF No.	Description	Spec	Year	Qty	Notes
N I	155950	NA	Brake - Aftermarket		97-On	1	
N I	155950A	50190BW	Brake - OE		97-On	1	
N I	155950AR	NA	Brake - OE, Relined		97-On	1	

FILTERS

ILL	ALTO No.	REF No.	Description	Spec	Year	Qty	Notes
N I	155940	7701-467-106	Filter		97-On	1	

SEALING RINGS

ILL	ALTO No.	REF No.	Description	Spec	Year	Qty	Notes
N I	155100A	221515	Rear Cover (Large) OE Style		97-On	1	Teflon

BUSHINGS

ILL	ALTO No.	REF No.	Description	Spec	Year	Qty	Notes
N I	155625	NA	Bushing Kit		97-On	1	Bronze
N I	155630	NA	Bushing Kit - Short		97-On	1	Bi-Metal (Includes Front Pump, Small Stator, Large Stator)
N I	155200	120001	Bushing - Front Pump		97-On	1	Bi-Metal

RENAULT

RENAULT, CITROEN, PEUGEOT
AL4, DPO (STA) 1997-On

BUSHINGS

ILL	ALTO No.	REF No.	Description	Spec	Year	Qty	Notes
N I	155206	120003-01	Bushing - Stator	Small	97-On	1	Bi-Metal
N I	155200X	NA	Bushing- Front Pump		97-On	1	Bronze
N I	155201X	NA	Bushing - Planetary Gear		97-On	1	Bronze
N I	155202X	NA	Bushing - Input Drum		97-On	1	Bronze
N I	155203X	NA	Bushing - E Clutch Hub		97-On	2	Bronze
N I	155204AX	NA	Bushing - Brake Drum, Small		97-On	1	Bronze
N I	155204X	NA	Bushing - Brake Drume, Large		97-On	2	Bronze
N I	155205	120003-02	Bushing - Stator	Large	97-On	1	Bi-Metal
N I	155205X	NA	Bushing - Stator Support, Large		97-On	1	Bronze
N I	155206X	NA	Bushing - Stator Support, Small		97-On	1	Bronze

ELECTRONIC CONTROL COMPONENTS

ILL	ALTO No.	REF No.	Description	Spec	Year	Qty	Notes
N I	155501	50219	Solenoid EPC		97-On	1	
N I	155502	50220	Solenoid Shift		97-On	1	
N I	155503	7700-700-010	Neutral Switch Range Selector (MLPS) OEM		97-On	1	

PISTONS

ILL	ALTO No.	REF No.	Description	Spec	Year	Qty	Notes
N I	155670	NA	Kit, Molded Pistons		97-On	1	7 pistons
N I	155301	7700-872-240JM	Piston-E1 CL Apply		97-On	1	
N I	155302	7700-875-765CF	Piston-E1 CL Balance		97-On	1	
N I	155303	7700-100-393CD G	Piston-E2 CL Apply		97-On	1	
N I	155304	7700-870-611HL	Piston-E2 CL Balance		97-On	1	
N I	155305	7700-870-097F1	Piston-F1 CL Apply		97-On	1	
N I	155306	7700-874-818H	Piston-F3 Band Servo		97-On	1	
N I	155307	7700-874-819FH	Piston-F2 Band Servo		97-On	1	

HARD PARTS

ILL	ALTO No.	REF No.	Description	Spec	Year	Qty	Notes
N I	155350	NA	Drum - E1 without bushing		97-On	1	
N I	155325	RE-SP-1	Sprag - Torque Converter		97-On	1	

SUBARU

M41, M41A (3AT)

1975-94

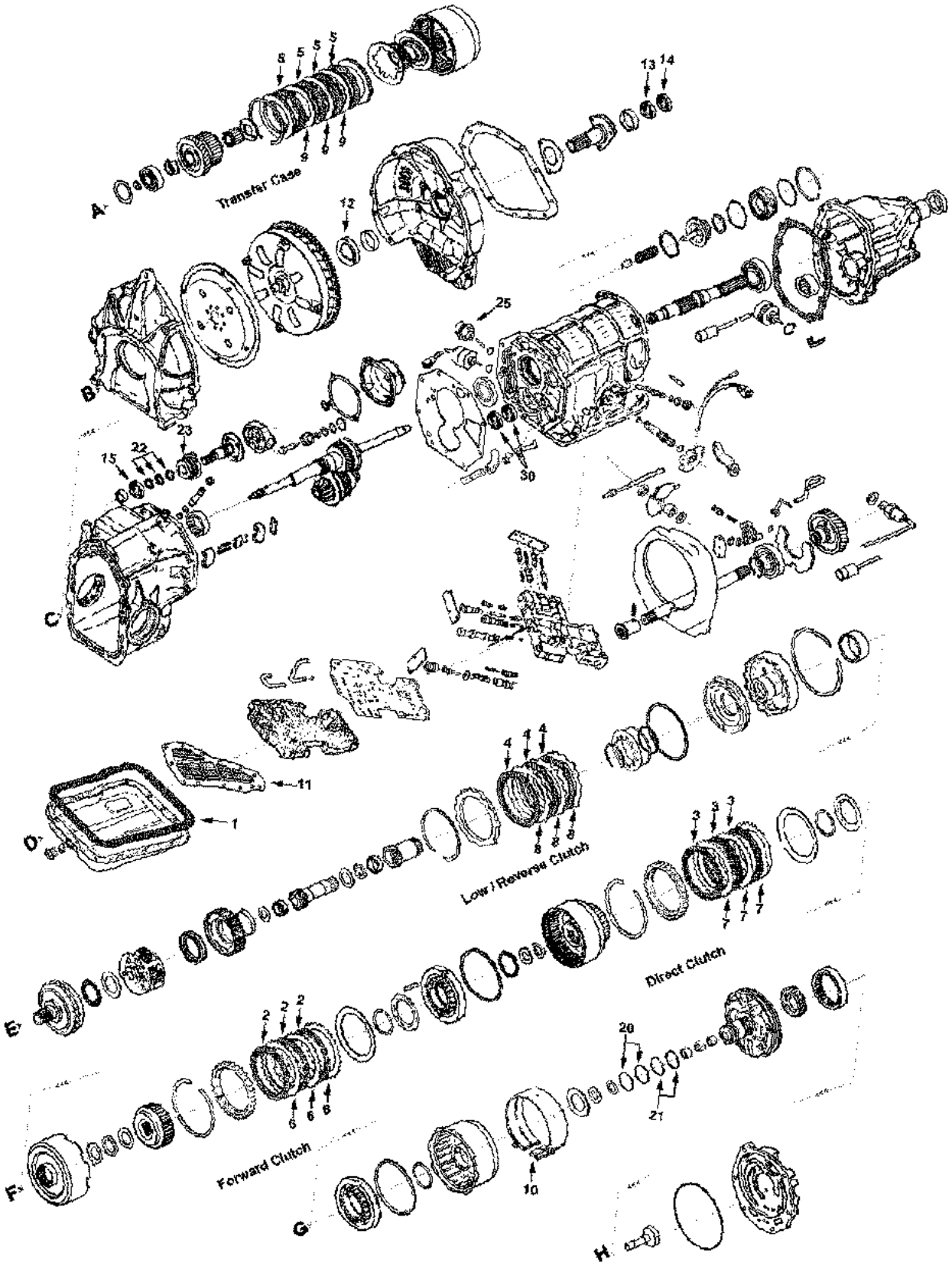

SUBARU
M41, M41A (3AT)
1975-94

KITS
*Add Suffix SK for Super Kit

ILL	Description	Years	Friction Module	Steel Module	Overhaul Kit	Banner Kit	Master Kit
KT	Rebuilding Kit - 2wd	75-82	042752A	042753A	042804	042905LS	042905
KT	Rebuilding Kit - 4wd w/Transfer plates	85-94	042752F	042753F	042806	042907DLS	042907D
KT	Rebuilding Kit - 4wd w/o Transfer plates	85-94	042752G	042753G	042806	042907ELS	042907E
KT	Rebuilding Kit - 4wd w/Transfer plates	83-94	042752C	042753C	042806	042907ALS	042907A
KT	Rebuilding Kit - 4wd w/o Transfer plates	83-94	042752B	042753B	042806	042907LS	042907

MISCELLANEOUS GASKETS & KIT COMPONENTS

ILL	ALTO No.	REF No.	Description	Spec	Year	Qty	Notes
1D	042820	34539-3600	Gasket, Oil Pan - 13 bolt holes	Cork/Rub	75-82	1	
1D	042822	44539-7000	Gasket, Oil Pan - 14 bolt holes	Cork/Rub	83-90	1	
1D	042824	31397-AA050	Gasket, Oil Pan - 14 bolt holes (indented)	Cork/Rub	91-94	1	

FRICTION CLUTCHES

ILL	ALTO No.	REF No.	Description	Spec	Year	Qty	Notes
2F	042700	45321-X0103	Forward	.061/1.55	75-94	3-4	Tan - 44T - OD: 4.530" - WF
3F	042700	45321-X0103	Reverse (Direct)	.061/1.55	75-94	3	Tan - 44T - OD: 4.530" - WF
4E	042712	34079-8710	Low / Reverse	.092/2.35	75-82	3-4	Tan - 51T - OD: 5.117" - SM
4E	042722	34079-8720	Low / Reverse	.095/2.4	83-84	3-4	Tan - 45T - OD: 5.117" - PL
4E	042732	31662-AA010	Low / Reverse	.095/2.4	85-94	5	Tan - 48T - OD: 5.331" - SM
4E	042732A	31662-AA020	Low / Reverse	.091/2.3	85-94	5	Tan - 48T - OD: 5.331" - SM
5A	042706	31588-AA041	Transfer Case	.115/2.9	83-94	3-4	Tan - 33T - OD: 3.702" - SM

STEEL CLUTCHES

ILL	ALTO No.	REF No.	Description	Spec	Year	Qty	Notes
6F	042701	45361-X0101	Forward	.063/1.6	75-94	3	28T - ID: 3.625"
7F	042701	45361-X0101	Reverse (Direct)	.063/1.6	75-94	3-4	28T - ID: 3.625"
8E	042703A	34425-X8700	Low / Reverse	.071/1.8	75-82	4-7	13T - ID: 4.212"
8E	042723	34425-X8710	Low / Reverse	.071/1.8	83-84	4-5	13T - ID: 4.412"
8E	042733	31666-AA010	Low / Reverse	.091/2.3	85-94	5	13T - ID: 4.665"
9A	042707	31589-AA000	Transfer Case	.071/1.8	83-94	2-3	48T - ID: 2.837"

BANDS

ILL	ALTO No.	REF No.	Description	Spec	Year	Qty	Notes
10G	042951	31630-X0103	Brake	Tan	75-94	1	

FILTERS (add Prefix FK for FILTER KIT)

ILL	ALTO No.	REF No.	Description	Spec	Year	Qty	Notes
11D	042940	31728-X0F00	Filter		75-94	1	

METAL CLAD SEALS

ILL	ALTO No.	REF No.	Description	Spec	Year	Qty	Notes
12B	042400	8067-42110	Torque Converter Housing	60mm	75-94	1	
13B	042403	8067-28040	Stator Shaft - Front	42mm	75-94	1	
14B	042400A	8067-32020	Stator Shaft - Rear (thick)	48mm	75-79	1	
14B	042400B	8067-28030	Stator Shaft - Rear (thin)	48mm	80-81	1	
14B	042400C	8067-28050	Stator Shaft - Rear	44mm	82-On	1	
N I	042406	8067-42130	Differential & Reduction case	64mm	75-82	1	
30C	042404	8067-21020	Intermediate Shaft	33mm	83-On	2	
15C	042419	8067-22040	Governor to case	40mm	75-94	1	
N I	042410B	8067-12030	Speedometer shaft	17.5mm	75-94	1	

SUBARU
M41, M41A (3AT)
1975-94

METAL CLAD SEALS

ILL	ALTO No.	REF No.	Description	Spec	Year	Qty	Notes
16C	042408	8067-40030	Reduction Drive gear support	58mm	75-94	2	
N I	042425	8067-27070	Axle - inner	45mm	75-94	1	
N I	042426	8067-27080	Axle - outer	45mm	75-94	1	
17C	042405	8067-35070	Extension Housing	50mm	75-94	1	

SEALING RINGS

ILL	ALTO No.	REF No.	Description	Spec	Year	Qty	Notes
KT	042602	G707	Sealing Ring Kit - 4M / 6T		75-94	1	
20G	042101	31362-X0101	Pump Stator to Forward Drum	1.692	75-94	2	Metal
21G	042100	31361-X0100	Pump Stator to Direct Drum	1.732	75-94	2	Metal
22C	042107	31879-AA000	Governor Sleeve - small	.9375	75-94	3	Teflon
23C	042106	31880-AA000	Governor Sleeve - large	1.732	75-94	1	Teflon
N I	042108	31337-AA000	Output Shaft		75-94	1	Teflon

BUSHINGS

ILL	ALTO No.	REF No.	Description	Spec	Year	Qty	Notes
KT	042627	NA	Bushing Kit		75-94	1	

MODULATORS

ILL	ALTO No.	REF No.	Description	Spec	Year	Qty	Notes
25C	042500	31931-X0102	.84" Diaphram (Non Turbo)		75-94	1	
25C	042501	31931-X0110	.91" Diaphram (Turbo)		75-94	1	

SUBARU
R4AX-EL (4AT)
1987-98

KITS

*Add Suffix SK for Super Kit

ILL	Description	Years	Friction Module	Steel Module	Overhaul Kit	Banner Kit	Master Kit
KT	Rebuilding Kit - DL, GL, XT without Transfer case	87-89	075752A	075753A	075804	075903LS	075903
KT	Rebuilding Kit - DL, GL, XT with Transfer case	87-89	075752E	075753E	075804	075907LS	075907
KT	Rebuilding Kit - FORESTER without Transfer case	98	075752T	TBA	075804	075903CLS	TBA
KT	Rebuilding Kit - FORESTER with Transfer case	98	075752S	TBA	075804	075907CLS	TBA
KT	Rebuilding Kit - IMPREZA without Transfer case	92-96	TBA	TBA	075804	TBA	TBA
KT	Rebuilding Kit - IMPREZA with Transfer case	92-96	075752M	075753P	075804	075907BLS	075907B
KT	Rebuilding Kit - IMPREZA without Transfer case	97-98	075752T	TBA	075804	075903CLS	TBA
KT	Rebuilding Kit - IMPREZA with Transfer case	97-98	075752S	TBA	075804	075907CLS	TBA
KT	Rebuilding Kit - LEGACY Non Turbo w/o Transfer case	89-94	075752A	075753A	075804	075903LS	075903
KT	Rebuidling Kit - LEGACY Non Turbo w/ Transfer case	89	075752E	075753E	075804	075907LS	075907
KT	Rebuilding Kit - LEGACY Turbo w/o Transfer case	89-91	075752F	075753F	075804	075903ALS	075903A
KT	Rebuilding Kit - LEGACY Turbo w/ Transfer case	89-94	TBA	TBA	075804	TBA	TBA
KT	Rebuilding Kit - LEGACY Turbo w/o Transfer case	92-94	075752L	075753N	075804	075903BLS	075903B
KT	Rebuilding Kit - LEGACY 2.2L, 2.5L w/o Transfer case	95-98	075752T	075753T	075804	075903CLS	075903C
KT	Rebuilding Kit - LEGACY 2.2L, 2.5L with Transfer case	95-98	075752S	075753S	075804	075907CLS	075907C
KT	Rebuilding Kit - LOYALE without Transfer case	90-93	075752A	075753F	075804	075903LS	075903
KT	Rebuilding Kit - LOYALE with Transfer case	90-93	075752E	075753E	075804	075907LS	075907
KT	Rebuilding Kit - SVX without Transfer case	92-93	075752F	075753F	075804	075903ALS	075903A
KT	Rebuilding Kit - SVX with Transfer case	92-93	075752G	075753G	075804	075907ALS	075907A
KT	Rebuilding Kit - SVX without Transfer case	94	TBA	075753F	075804	TBA	TBA
KT	Rebuilding Kit - SVX with Transfer case	94	TBA	075753G	075804	TBA	TBA
KT	Rebuilding Kit - SVX without Transfer case	95-98	TBA	TBA	075804	TBA	TBA
KT	Rebuilding Kit - SVX with Transfer case	95-98	TBA	TBA	075804	TBA	TBA

MISCELLANEOUS GASKETS & KIT COMPONENTS

ILL	ALTO No.	REF No.	Description	Spec	Year	Qty	Notes
1K	075816A	31397-AA040	Gasket, Oil Pan	Cork/Rub	87-98	1	

FRICTION CLUTCHES

ILL	ALTO No.	REF No.	Description	Spec	Year	Qty	Notes
10C	075700	31532-AA100	Forward	.078/2.0	87-95	5-6	Tan - 36T - OD: 5.845" - PL
10C	075700A	31532-AA111	Forward	.063/1.6	96-On	5	HEG - 36T - OD: 5.845" - PL
11B	075702	31532-AA120	High	.063/1.6	87-98	4-5	HEG - 30T - OD: 5.233" - PL
12D	075704	31662-AA050	Low / Reverse	.078/2.0	87-94	6	HEG - 30T - OD: 5.805" - PL
12D	075704-160	31662-AA060	Low / Reverse	.063/1.6	89-94	8	HEG - 30T - OD: 5.805" - PL
12D	075704-180	31662-AA090	Low / Reverse	.071/1.8	92-98	5-7	HEG - 30T - OD: 5.805" - PL
13B	075706	31532-AA040	Reverse	.078/2.0	87-91	2	Tan - 34T - OD: 5.880" - PL
13B	075706A	31532-AA080	Reverse	.078/2.0	92-96	2	HEG - 30T - OD: 5.880" - PL
13B	075706B200	31532-AA140	Reverse	.078/2.0	97-98	2	HEG - 38T - OD: 5.880" - PL
13B	075706-190	NA	Reverse - PowerPack® Component	.074/1.9	87-91	AR	Tan - 34T - OD: 5.880" - PL
13B	075706A190	NA	Reverse - PowerPack® Component	.074/1.9	92-96	AR	HEG - 34T - OD: 5.880" - PL
14C	075708	31532-AA070	Overrun	.078/2.0	87-98	3	HEG - 18T - OD: 5.260" - PL
15F	075710	31588-AA020	Transfer Case	.078/2.0	87-93	5	Tan - 24T - OD: 4.646" - PL
15F	075710-180	31588-AA060	Transfer Case	.071/1.8	91-98	6	Tan - 24T - OD: 4.646" - SM
15F	075720-180	31588-AA070	Transfer Case	.071/1.8	Various	AR	Tan - 50T - OD: 4.646" - SM

SUBARU
R4AX-EL (4AT)
1987-98

STEEL CLUTCHES

ILL	ALTO No.	REF No.	Description	Spec	Year	Qty	Notes
16C	075701	31536-AA110	Forward	.078/2.0	87-95	5-6	24T - ID: 5.355"
16C	075701A	31536-AA120	Forward	.071/1.8	96-98	5	24T - ID: 5.355"
17B	075733	31536-AA060	High	.118/3.0	87-97	3	27T - ID: 4.414"
17B	075713	31536-AA040	High	.078/2.0	87-97	1/5	27T - ID: 4.414"
17B	075713K200	NA	High - Kolene®	.078/2.0	87-97	1/5	27T - ID: 4.414"
17B	075723	31536-AA070	High	.108/2.75	90-94	1/5	27T - ID: 4.414"
17B	075703K152	NA	High - Kolene® PowerPack® Component	.060/1.52	87-97	AR	27T - ID: 4.414"
17B	075703A	31536-AA170	High	.078/2.0	95-98	1/5	24T - ID: 4.414"
17B	075703A300	31536-AA160	High	.118/3.0	95-98	3	24T - ID: 4.414"
18D	075705	31666-AA050	Low / Reverse	.078/2.0	87-94	6	14T - ID: 5.086"
18D	075705-160	31666-AA060	Low / Reverse	.063/1.6	92-98	5	14T - ID: 5.086"
18D	075705-180	31666-AA030	Low / Reverse	.071/1.8	89-94	8	14T - ID: 5.086"
18D	075705-130	NA	Low / Reverse - selective	.051/1.3	87-98	AR	14T - ID: 5.086"
18D	075705-225	NA	Low / Reverse - selective	.086/2.25	87-98	AR	14T - ID: 5.086"
19B	075707	31536-AA050	Reverse	.078/2.0	87-91	2	30T - ID: 5.355"
19B	075707A	31536-AA100	Reverse	.078/2.0	92-98	2	30T - ID: 5.084"
19B	075707-225	NA	Reverse - selective	.086/2.25	87-91	AR	30T - ID: 5.355"
21C	075709	31536-AA090	Overrun	.078/2.0	87-98	3	6T - ID: 4.700"
21C	075709-225	NA	Overrun - selective	.086/2.25	87-98	AR	6T - ID: 4.700"
22F	075711	31589-AA030	Transfer Case	.071/1.8	87-93	5	30T - ID: 4.117"
22F	075711-160	31589-AA041	Transfer Case	.063/1.6	90-94	5	30T - ID: 4.117"
22F	075711K200	NA	Transfer Case - Kolene® selective	.078/2.0	87-97	AR	Kolene® - 30T - ID: 4.117"
22F	075711-200	31589-AA050	Transfer Case - selective	.078/2.0	87-98	AR	30T - ID: 4.117"
22F	075711-240	31589-AA060	Transfer Case - selective	.095/2.4	87-98	AR	30T - ID: 4.117"
22F	075711-280	31589-AA070	Transfer Case - selective	.110/2.8	87-98	AR	30T - ID: 4.117"

PRESSURE PLATES

ILL	ALTO No.	REF No.	Description	Spec	Year	Qty	Notes
23B	075760-320	NA	High - backing	.126/3.2	87-94	AR	
13B	075760-340	31567-AA340	High - backing	.134/3.4	87-94	AR	
13B	075760-360	31567-AA190	High - backing	.142/3.6	87-94	AR	
13B	075760-380	31567-AA200	High - backing	.150/3.8	87-94	AR	
13B	075760-400	31567-AA210	High - backing	.157/4.0	87-94	AR	
13B	075760-420	31567-AA220	High - backing	.165/4.2	87-94	AR	
13B	075760-440	31567-AA230	High - backing	.173/4.4	87-94	AR	
13B	075760-460	31567-AA240	High - backing	.181/4.6	87-94	AR	
13B	075760-480	31567-AA250	High - backing	.189/4.8	87-On	AR	
13B	075760-500	31567-AA260	High - backing	.197/5.0	87-On	AR	
14B	TBA	31567-AA350	Reverse - backing	.189/4.8	87-On	AR	
14B	TBA	31567-AA360	Reverse - backing	.197/5.0	87-On	AR	
14B	TBA	31567-AA370	Reverse - backing	.205/5.2	87-On	AR	
14B	TBA	31567-AA380	Reverse - backing	.213/5.4	87-On	AR	
14B	TBA	31567-AA390	Reverse - backing	.220/5.6	87-On	AR	

OEI® Original Equipment Improvements

ILL	ALTO No.	REF No.	Description	Spec	Year	Qty	Notes
KT	075758	NA	DrumSaver® Kit - Reverse clutch		87-91	1	Reuse worn drum (34T)
KT	075758A	NA	DrumSaver® Kit - Reverse clutch		92-98	1	Reuse worn drum (30T)

SUBARU
R4AX-EL (4AT)
1987-98

OEI® Original Equipment Improvements - HI-PERFORMANCE

ILL	ALTO No.	REF No.	Description	Spec	Year	Qty	Notes
KT	075757HP	NA	DrumSaver™ - High Clutch		87-97	1	

BANDS

ILL	ALTO No.	REF No.	Description	Spec	Year	Qty	Notes
15B	075950	31630-AA050	Brake - Heavy Duty Wide Carbonite®	Crb	88-On	1	Carbonite®

FILTERS

ILL	ALTO No.	REF No.	Description	Spec	Year	Qty	Notes
16K	075940	31728-AA000	Filter - 1/8" pickup		87-93	1	
16K	075940A	31728-AA011	Filter - 3/4" pickup		90-98	1	

METAL CLAD SEALS

ILL	ALTO No.	REF No.	Description	Spec	Year	Qty	Notes
20H	075400	8067-50030	Torque Converter Housing		87-98	1	
21A	075425	8067-30032	Left Axle	50mm	87-98	1	
22A	075426	8067-30031	Right Axle	50mm	87-98	1	
24G	042405	8067-35070	Extension Housing		87-98	1	
25K	075402	8067-52010	Final Drive Pinion (front & rear)		87-98	2	
N I	075410	8067-16040	Manual Lever		87-98	1	
N I	042410B	8067-12030	Speedometer shaft	17.5mm	87-98	1	

SEALING RINGS

ILL	ALTO No.	REF No.	Description	Spec	Year	Qty	Notes
KT	075601	NA	Sealing Ring Kit - 1M / 13T		87-98	1	
30J	068100	31377-AA040	Pump Stator to Reverse drum		87-98	2	
31J	068101	31377-AA030	Pump Stator to Direct drum		87-98	2	
32D	075101A	31377-AA122	Forward & Overrun drum		87-98	4	
33H	075104	31361-AA000	Pump Drive Shaft		87-98	1	
34E	075105	31377-AA020	Reduction Gear Shaft		87-98	2	
35F	075106	31377-AA010	Transfer Clutch		87-98	2	
36J	075103	31286-AA000	Pump Slide	Metal	87-98	1	

BUSHINGS

ILL	ALTO No.	REF No.	Description	Spec	Year	Qty	Notes
KT	075625A	NA	Bushing Kit		87-98	1	

SUBARU

4 SPEED (4EAT)

1998-On

KITS

*Add Suffix SK for Super Kit

ILL	Description	Years	Friction Module	Steel Module	Overhaul Kit	Banner Kit	Master Kit
KT	Rebuilding Kit	98-On	135752	135753	135800	135901LS	135901

FRICTION CLUTCHES

ILL	ALTO No.	REF No.	Description	Spec	Year	Qty	Notes
N I	162704-170	31532-AA170	Low	.068/1.73	98-On	6	Tan - 30T - OD: 5.425" - SM
N I	135700-160	NA	Low - Turbo only	.063/1.6	98-On	AR	Tan - 30T - OD: 5.425" - SM
N I	135702-160	31532-AA150	High	.063/1.6	98-On	4	HEG - 36T - OD: 5.435" - SB
N I	135706-160	31532-AA180	Reverse	.063/1.6	98-On	2	Tan - 30T - OD: 5.880" - PL
N I	135708-160	31532-AA131	2-4 Brake	.063/1.6	98-On	3	HEG - 30T - OD: 6.562" - SB
N I	075704-160	31662-AA110	Low / Reverse	.063/1.6	98-On	5-6	HEG - 30T - OD: 5.800 - PL
N I	075710-180	NA	Transfer Case	.071/1.8	98-On	6	Tan - 24T - OD: 4.650 - SM
N I	075720-180	NA	Transfer Case	.071/1.8	98-On	2	Tan - 50T - OD: 4.650 - SM

STEEL CLUTCHES

ILL	ALTO No.	REF No.	Description	Spec	Year	Qty	Notes
N I	135701-140	31536-AA200	Low	.055/1.4	98-On	5-6	30T - ID: 4.841"
N I	135703-200	31536-AA220	High	.078/2.0	98-On	4	8T - ID: 4.415"
N I	135707-160	31536-AA190	Reverse	.063/1.6	98-On	2	32T - ID: 5.244"
N I	135709-240	31536-AA142	2-4 Brake	.095/2.4	98-On	2	23T - ID: 5.693"
N I	135709A240	31536-AA281	2-4 Brake (2 wide teeth)	.094/2.39	98-On	2	23T - ID: 5.696"
N I	075705-160	31666-AA070	Low / Reverse	.063/1.6	98-On	6	14T - ID: 5.086"
N I	075711K160	NA	Transfer Case	.063/1.6	98-On	6	Kolene® - 30T - ID: 4.117"
N I	075711-200	31589-AA050	Transfer Case	.078/2.0	98-On	AR	30T - ID: 4.117"
N I	075711-240	31589-AA060	Transfer Case	.095/2.4	98-On	AR	30T - ID: 4.117"
N I	075711-280	31589-AA070	Transfer Case	.110/2.8	98-On	AR	30T - ID: 4.117"

FILTERS

ILL	ALTO No.	REF No.	Description	Spec	Year	Qty	Notes
N I	135940	31728-AA050	Filter - internal		98-On	1	
N I	135941	38325-KA000	Filter - external (spin on)		98-On	1	

METAL CLAD SEALS

ILL	ALTO No.	REF No.	Description	Spec	Year	Qty	Notes
N I	075400	8067-50050	Front Pump	65mm	98-On	1	
N I	075410	8067-16060	Manual Lever	25mm	98-On	1	
N I	075402	8067-52020	Oil Pump Retainer	66mm	98-On	1	
N I	042405	8067-35210	Extension Housing	50mm	98-On	1	
N I	042410B	8067-12090	Speedo	17.5mm	98-On	1	

SUBARU

5 SPEED (5EAT)

2005-On

KITS

*Add Suffix SK for Super Kit

ILL	Description	Years	Friction Module	Steel Module	Overhaul Kit	Banner Kit	Master Kit
KT	Rebuilding Kit - with Molded Pistons	05-On	135752A	135753A	135802	135903LS	135903
KT	Rebuilding Kit - without Molded Pistons	05-On	135752A	135753A	135802X	135903XLS	135903X

FRICTION CLUTCHES

ILL	ALTO No.	REF No.	Description	Spec	Year	Qty	Notes
N I	174708-155	NL	Forward	.061/1.55	05-On	4	HEG - 39T - OD: 5.700" - PLNI
N I	174710-180	NL	Direct	.071/1.8	05-On	5	HEG - 24T - OD: 6.200" - PLNI
N I	174700-175	NL	Intermediate	.069/1.75	05-On	5	HEG - 60T - OD: 6.300" - PLNI
N I	174702-160	NL	Hi-Lo Reverse	.063/1.6	05-On	4	HEG - 30T - OD: 4.900" - PLNI
N I	135710-160	NL	Front Brake	.062/1.6	05-On	2	HEG - 30T - OD: 5.215" - PLNI
N I	174704-170	NL	Reverse Brake	.070/1.78	05-On	5	HEG - 50T - OD: 6.600" - PLNI
N I	174706-160	NL	Lo Coast Brake	.063/1.6	05-On	3	HEG - 30T - OD: 5.200" - PLNI
N I	075720-180	NL	Transfer Clutch	.071/1.8	05-On	3	Tan - 50T - OD: 4.646" - SM

STEEL CLUTCHES

ILL	ALTO No.	REF No.	Description	Spec	Year	Qty	Notes
N I	174709-200	NL	Forward	.079/2.0	05-On	4	18T - ID: 4.900"
N I	174711-240	NL	Direct	.094/2.4	05-On	5	24T - ID: 5.500"
N I	174701-200	NL	Intermediate	.079/2.0	05-On	5	24T - ID: 5.624"
N I	174703-240	NL	Hi-Lo Reverse	.094/2.4	05-On	4	24T - ID: 3.700"
N I	135711-280	31536-AA290	Front Brake	.110/2.8	05-On	2	18T - ID: 4.242"
N I	174705-200	NL	Reverse Brake	.079/2.0	05-On	5	18T - ID: 5.900"
N I	174707-200	NL	Lo Coast Brake	.079/2.0	05-On	3	18T - ID: 4.400"
N I	075711K160	NL	Transfer Clutch - Kolene®	.063/1.6	05-On	3	30T - ID: 4.117"

MOLDED PISTONS

ILL	ALTO No.	REF No.	Description	Spec	Year	Qty	Notes
KT	174670	NL	Piston Kit		05-On	1	3 pistons
N I	174301	NL	Input		05-On	1	
N I	174302	NL	Direct		05-On	1	
N I	174303	NL	High-Low		05-On	1	

SUBARU

TR690 CVT Gen 1 AWD

2010-12

KITS

*Add Suffix SK for Super Kit

ILL	Description	Years	Friction Module	Steel Module	Overhaul Kit	Banner Kit	Master Kit
KT	Rebuilding Kit	10-12	228752	228753	TBA	TBA	TBA

FRICTION CLUTCHES

ILL	ALTO No.	REF No.	Description	Spec	Year	Qty	Notes
N I	228700-160	NA	Forward		10-12	6	
N I	228702-160	NA	Reverse - 4 cyl.		10-12	5	
N I	228704-160	NA	Reverse - 6 cyl.		10-12	5	

STEEL CLUTCHES

ILL	ALTO No.	REF No.	Description	Spec	Year	Qty	Notes
N I	228701-120	NA	Forward		10-12	6	
N I	228703-140	NA	Reverse - 4 cyl.		10-12	5	
N I	228705-140	NA	Reverse - 6 cyl.		10-12	5	
N I	228709A080	NA	Internal Reduction - Input		10-12	5	
N I	228707-080	NA	External Reduction - Input		10-12	6	

SUBARU

TR580 CVT Gen 2 AWD

2012-On

KITS

*Add Suffix SK for Super Kit

ILL	Description	Years	Friction Module	Steel Module	Overhaul Kit	Banner Kit	Master Kit
KT	Rebuilding Kit	12-On	228752A	228753A	TBA	TBA	TBA

FRICTION CLUTCHES

ILL	ALTO No.	REF No.	Description	Spec	Year	Qty	Notes
N I	228710-160	NA	Forward		12-On	3	
N I	228712-160	NA	Reverse		12-On	4	

STEEL CLUTCHES

ILL	ALTO No.	REF No.	Description	Spec	Year	Qty	Notes
N I	228711-120	NA	Forward		12-On	3	
N I	228113-120	NA	Reverse		12-On	4	

SUZUKI
A174
1997-On

KITS

*Add Suffix SK for Super Kit

ILL	Description	Years	Friction Module	Steel Module	Overhaul Kit	Banner Kit	Master Kit
KT	Rebuilding Kit - Jimny with Molded Pistons	97-99	175752A	175753	175802A	175903LS	175903
KT	Rebuilding Kit - Jimny without Molded Pistons	97-99	175752A	175753	175802AX	175903XLS	175903X
KT	Rebuilding Kit - Jimny with Molded Pistons	00-On	175752B	175753B	175802A	175903ALS	175903A
KT	Rebuilding Kit - Jimny without Molded Pistons	00-On	175752B	175753B	175802AX	175903AXLS	175903AX

FRICTION CLUTCHES

ILL	ALTO No.	REF No.	Description	Spec	Year	Qty	Notes
N I	175700-166	NL	C1 Front	.065/1.66	97-On	3-4	HEG - 36T - OD: 5.160" - SM
N I	175708-166	NL	C2 Rear	.065/1.66	97-On	6	HEG - 40T - OD: 3.770" - SM
N I	175702-166	NL	B0 Overdrive Brake	.065/1.66	97-99	1	Tan - 36T - OD: 5.610" - SM
N I	175700A166	NL	B0 Overdrive Brake	.065/1.66	00-On	2	Tan - 36T - OD: 5.160" - PLNI
N I	175702A166	NL	B1 1-2 Brake	.065/1.66	97-99	4	Tan - 36T - OD: 5.610" - SM
N I	175702B170	NL	B1 1-2 Brake	.067/1.7	00-On	3	HEG - 54T - OD: 5.084" - PLNI
N I	175700A166	NL	B2 Reverse Brake	.065/1.66	97-99	6	Tan - 36T - OD: 5.160" - PLNI
N I	175700B170	NL	B2 Reverse Brake	.067/1.7	00-On	5	HEG - 55T - OD: 4.880" - PLNI

STEEL CLUTCHES

ILL	ALTO No.	REF No.	Description	Spec	Year	Qty	Notes
N I	175701-180	NL	C1 Front	.070/1.8	97-On	4	8T - ID: 4.640
N I	175709-180	NL	C2 Rear	.070/1.8	97-On	5-6	8T - ID: 3.330
N I	175703A280	NL	B0 Overdrive Brake	.110/2.8	97-99	1	18T - ID: 4.830 w/step
N I	175703A320	NL	B0 Overdrive Brake	.127/3.2	97-99	1	18T - ID: 4.830 w/step
N I	175707A180	NL	B0 Overdrive Brake	.071/1.8	00-On	2	16T - ID: 4.651"
N I	175703-180	NL	B1 1-2 Brake	.070/1.8	97-99	4	18T - ID: 4.830
N I	175703B183	NL	B1 1-2 Brake	.072/1.83	00-On	1	16T - ID: 4.476"
N I	175703B150	NL	B1 1-2 Brake	.059/1.5	00-On	2	16T - ID: 4.476"
N I	175703B168	NL	B1 1-2 Brake	.066/1.68	00-On	2	16T - ID: 4.476"
N I	175707-125	NL	B2 Reverse Brake	.048/1.25	97-99	3	19T - ID: 4.640
N I	175707-300	NL	B2 Reverse Brake	.117/3.0	97-99	2	19T - ID: 4.640
N I	175707B180	NL	B2 Reverse Brake	.070/1.8	00-On	5	16T - ID: 4.470"

FILTERS

ILL	ALTO No.	REF No.	Description	Spec	Year	Qty	Notes
N I	175944A	26570-81A11	Filter		97-11	1	
N I		265870-81A10					

PISTONS

ILL	ALTO No.	REF No.	Description	Spec	Year	Qty	Notes
N I	175671	NL	Piston Kit		97-On	1	5 Pistons
N I	175302	NL	Piston		97-On	1	

SUZUKI

JF402E 1998-On

SR410, SR412 WAGON R

KITS

*Add Suffix SK for Super Kit

ILL	Description	Years	Friction Module	Steel Module	Overhaul Kit	Banner Kit	Master Kit
KT	Rebuilding Kit with Molded Pistons	98-On	175752	175753	175800A	175901LS	175901
KT	Rebuilding Kit without Molded Pistons	98-On	175752	175753	175800	175901XLS	175901X

MISCELLANEOUS GASKETS & KIT COMPONENTS

ILL	ALTO No.	REF No.	Description	Spec	Year	Qty	Notes
N I	175816	24784-75F10	Gasket, Oil Pan	Cork/Rub	98-On	1	

FRICTION CLUTCHES

ILL	ALTO No.	REF No.	Description	Spec	Year	Qty	Notes
N I	175700-166	26633-75FT0X	Forward (Front)	.065/1.66	98-On	4	HEG - 36T - OD: 5.16" - SM
N I	175702A166	26746-75FT0X	1-2 Brake	.065/1.66	98-On	4	Tan - 36T - OD: 5.610 - SM
N I	175702-166	26823-75FT0X	Overdrive	.065/1.66	98-On	1	Tan - 36T - OD: 5.610 - SM
N I	175700A166	26811-75FT0X	Reverse	.065/1.66	98-On	4	Tan - 36T - OD: 5.160 - PLNI
N I	175708-166	26611-75FT0X	Rear	.065/1.66	98-On	5	HEG - 40T - OD: 3.770 - SM

STEEL CLUTCHES

ILL	ALTO No.	REF No.	Description	Spec	Year	Qty	Notes
N I	175701-180	26633-75FT0X	Forward (Front)	.070/1.8	98-On	4	8T - ID: 4.640
N I	175703-180	26746-75FT0X	1-2 Brake	.070/1.8	98-On	4	18T - ID: 4.830
N I	175703A280	26823-75FT0X	Overdrive	.110/2.8	98-On	1	18T - ID: 4.830 w/step
N I	175703A320	NL	Overdrive	.127/3.2	98-On	1	18T - ID: 4.830 w/step
N I	175707-125	26811-75FT0X	Reverse	.048/1.25	98-On	3	19T - ID: 4.640
N I	175707-300	NL	Reverse	.117/3.0	98-On	2	19T - ID: 4.640
N I	175709-180	NL	Rear	.070/1.8	98-On	5	8T - ID: 3.330

TORQUE CONVERTER - FRICTION RINGS AND CLUTCHES

ILL	ALTO No.	REF No.	Description	Spec	Year	Qty	Notes
N I	T1237K1	NA	Friction Ring - Torque Converter w/adhesive	.070	98-On	2	HEG - OD: 7.177" - ID: 6.294"
N I	T1234K1	NA	Friction Ring - Torque Converter w/adhesive	.045	98-On	2	HEG - OD: 7.177" - ID: 6.294"

FILTERS

ILL	ALTO No.	REF No.	Description	Spec	Year	Qty	Notes
N I	175940	26750-75F10	Filter Suzuki Wagon R		98-On	1	
N I	175940A	26570-83E10	Filter SR413 SW 1.5CM Pipe			1	

MOLDED PISTONS

ILL	ALTO No.	REF No.	Description	Spec	Year	Qty	Notes
KT	175670	NL	Piston Kit		98-On	1	4 pistons

TOYOTA

A40 SERIES 1972-On

AW372 (R4AW2) / KM148 (V4AW2)

A>

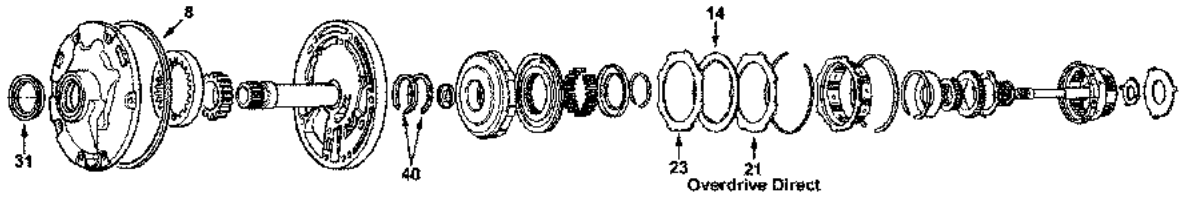

B>

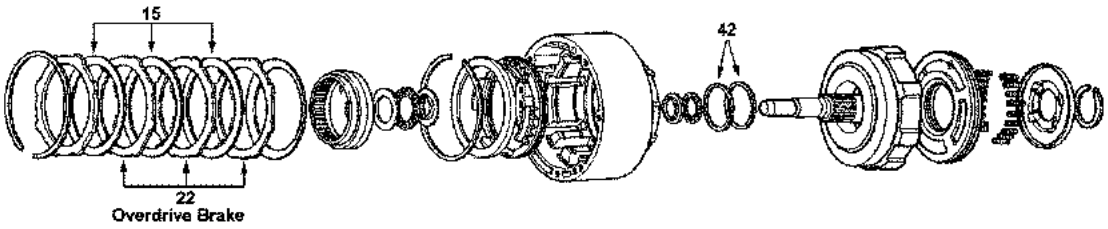

C>

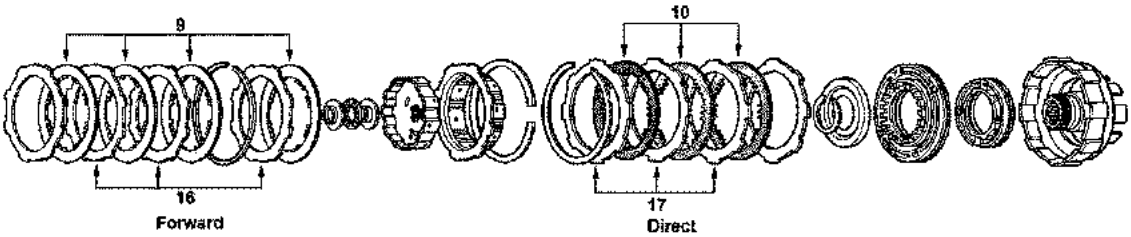

D>

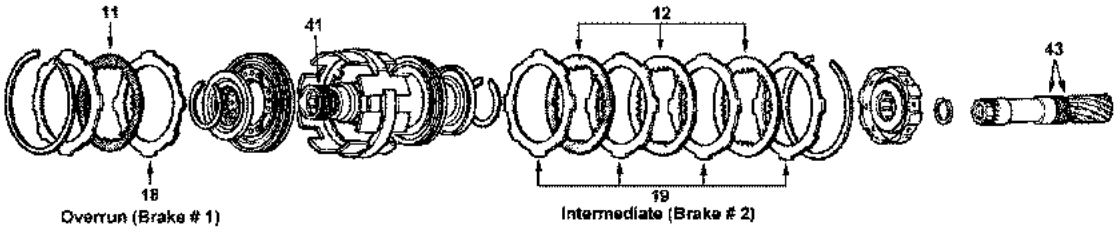

E>

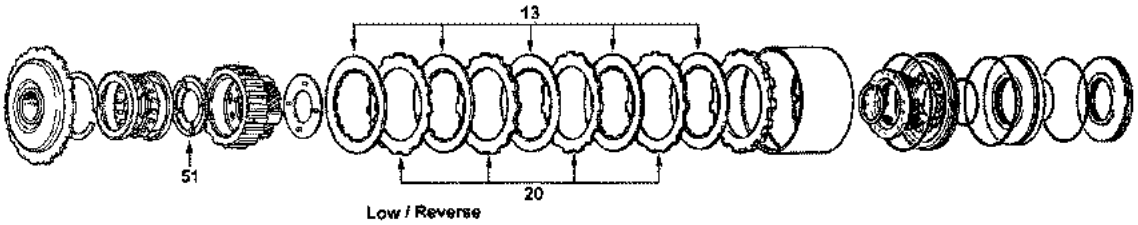

F>

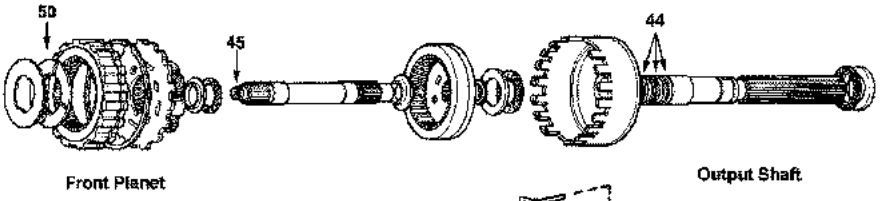

G>

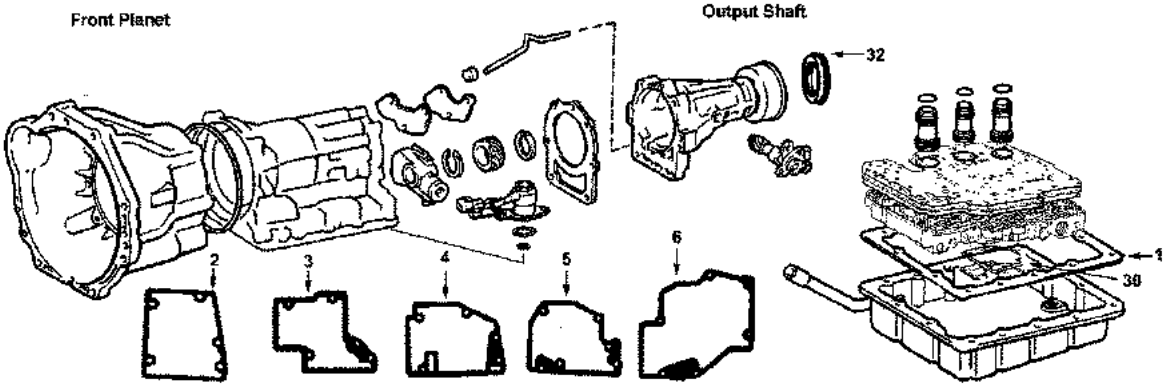

TOYOTA

A40 SERIES 1972-On

AW372 (R4AW2) / KM148 (V4AW2)

KITS

*Add Suffix SK for Super Kit

ILL	Description	Years	Friction Module	Steel Module	Overhaul Kit	Banner Kit	Master Kit
KT	Rebuilding Kit - A40, 41, 43 (3 speed)	72-93	044752	044753	044800	044901LS	044901
KT	Rebuilding Kit - A40D, A42D	77-91	044752A	044753A	044802	044903LS	044903
KT	Rebuilding Kit - A43D, DE, DL	79-83	044752C	044753B	044806	044909ALS	044909A
KT	Rebuilding Kit - A43DE, DL	84-On	044752D	044753B	044806	044909BLS	044909B
KT	Rebuilding Kit - A43D, DE, DL (combo)	79-On	044752B	044753B	044806	044909LS	044909
KT	Rebuilding Kit - A42DL, 44DL, 45DL	84-On	044752G	044753G	044806A	044909CLS	044909C
KT	Rebuilding Kit - A42DL, 44DL, 45DL, KM148	84-On	044752H	044753H	044806A	044909DLS	044909D
KT	Rebuilding Kit - A46DE, DF	90-On	044752J	044753J	044806	044909ELS	044909E
KT	Rebuilding Kit - A44DE (03-72LE)	92-On	044752K	044753K	044806A	044909FLS	044909F

KITS - HI-PERFORMANCE Red Eagle®

ILL	Description	Years	Friction Module	Steel Module	Overhaul Kit	Banner Kit	Master Kit
KT	Rebuilding Kit - A40, 41, 43 (3 speed)	72-93	044752HP	044753HP	044800	044901HPLS	044901HP

MISCELLANEOUS GASKETS & KIT COMPONENTS

ILL	ALTO No.	REF No.	Description	Spec	Year	Qty	Notes
1G	044816	35168-22010	Gasket, Oil Pan	Cork/Rub	72-On	1	
2G	044004	NA	Gasket, Filter - A40, A41, A43		72-93	1	
3G	044004A	35339-30030	Gasket, Filter - A40D, A42D		77-91	1	
4G	044004B	35339-30050	Gasket, Filter - A43D		79-On	1	
5G	044004C	35339-30060	Gasket, Filter - All "DE" models		79-On	1	
6G	044004D	35339-14010	Gasket, Filter - All "DL, DF" & Mitsubishis		82-On	1	
7G	044005	35182-28010	Gasket, Extension Housing		72-On	1	
8A	044050	35147-22010	D Ring, Front Pump		72-79	1	
8A	044050A	90301-99010	O Ring, Front Pump		80-On	1	
N I	010116B	90301-18018	O Ring, Speedometer		72-On	1	
N I	044054	90301-09173	O Ring, Filler Tube & Detent cable		72-On	2	
N I	044306C	35496-22010	Checkball, VB		72-On	4-8	

FRICTION CLUTCHES

ILL	ALTO No.	REF No.	Description	Spec	Year	Qty	Notes
12D	044710	Various	Intermediate (Brake # 2) Ctr Support - rear	.078/2.0	85-On	2-3	Tan - 24T - OD: 5.000" - SM
9C	044700A230	Various	Forward, Direct, Intermediate, Overrun	.091/2.3	72-On	AR	HEG - 24T - OD: 5.000" - SM
13E	044702A230	Various	Low / Reverse (Brake #3)	.091/2.3	72-On	4-5	HEG - 16T - OD: 5.000" - SM
15B	044704	Various	Overdrive Brake	.091/2.3	79-81	3	Tan - 44T - OD: 5.589" - SM
15B	065702	Various	Overdrive Brake	.067/1.7	82-On	3	HEG - 33T - OD: 5.589" - SM
15B	044700W230	Various	* Waved Friction - replaces 044700		72-On	AR	Wave

FRICTION CLUTCHES - HI-PERFORMANCE - Red Eagle®

ILL	ALTO No.	REF No.	Description	Spec	Year	Qty	Notes
	044740	NA	All except Low / Reverse	.091/2.3	72-On	AR	Red - 24T - OD: 5.000" - SM
13E	044742	NA	Low / Reverse	.091/2.3	72-On	4-5	Red - 16T - OD: 5.000" - SM

FRICTION CLUTCHES - HI-PERFORMANCE - UNIT PACKS (ONE Rebuild)

ILL	ALTO No.	REF No.	Description	Spec	Year	Qty	Notes
KT	044740UP4	NA	UNIT PACK - Various	.091/2.3	72-On	1	4 Red Eagle® Frictions
KT	044742UP5	NA	UNIT PACK - Low / Reverse	.091/2.3	72-On	1	5 Red Eagle® Frictions

TOYOTA

A40 SERIES 1972-On

AW372 (R4AW2) / KM148 (V4AW2)

STEEL CLUTCHES

ILL	ALTO No.	REF No.	Description	Spec	Year	Qty	Notes
16C	044701	35634-22070	Forward	.071/1.8	72-On	3-4	8T - ID: 4.012"
16C	044711	35634-30070	Forward	.078/2.0	80-On	3-4	8T - ID: 4.012
16C	044701-140	35634-30090	Forward	.055/1.4	81-On	1	8T - ID: 4.012"
17C	044701	35634-22070	Direct	.071/1.8	72-On	2-3	8T - ID: 4.012"
17C	044711	35634-30070	Direct	.078/2.0	80-On	2-3	8T - ID: 4.012
17C	073701-230	NA	Direct - Selective (some A43D)	.091/2.3	99-On	5	8T - ID: 4.138"
16C	044701-051	NA	Forward & Direct - selective	.020/.51	72-On	AR	8T - ID: 4.012"
16C	044701-076	NA	Forward & Direct - selective	.030/.76	72-On	AR	8T - ID: 4.012"
17C	044701-230	35634-30120	Forward & Direct - selective	.091/2.3	72-On	AR	8T - ID: 4.012"
18D	044705	35634-22090	Overrun (Brake # 1) Ctr Support - front	.071/1.8	72-On	1-3	8T - ID: 4.012"
18D	044715	35648-30010	Overrun (Brake # 1) Ctr Support - front	.078/2.0	72-On	1-3	8T - ID: 4.012"
19D	044705	35634-22090	Intermediate (Brake #2) Ctr Support - rear	.071/1.8	72-On	2-4	8T - ID: 4.012"
19D	044715	35648-30010	Intermediate (Brake #2) Ctr Support - rear	.078/2.0	80-On	1-3	8T - ID: 4.012"
19D	044725	35648-30020	Intermediate (Brake #2) Ctr Support - rear	.091/2.3	80-On	3	8T - ID: 4.012"
19D	044735	35648-22010	Intermediate (Brake #2) Ctr Support - rear	.118/3.0	85-On	2	8T - ID: 4.012"
20E	044703	35634-22080	Low / Reverse (Brake #3)	.071/1.8	72-On	4	15T - ID: 4.012"
20E	044713	35647-22010	Low / Reverse (Brake #3)	.071/1.8	72-On	4	15T - ID: 4.012"
21A	044701	35634-22070	Overdrive Direct	.071/1.8	77-On	1-2	8T - ID: 4.012"
22B	044705	35634-22090	Overdrive Brake	.071/1.8	77-On	2-3	8T - ID: 4.012"
22B	044707	35634-30080	Overdrive Brake	.078/2.0	81-On	2	7T - ID: 4.578"
22B	044717	35634-30010	Overdrive Brake	.091/2.3	84-On	1-3	7T - ID: 4.578"
22B	044707-400	MD609200	Overdrive Brake - Mitsubishi	.158/4.0	95-On	3	7T - ID: 4.578"

STEEL CLUTCHES - HI-PERFORMANCE - Kolene®

ILL	ALTO No.	REF No.	Description	Spec	Year	Qty	Notes
20E	044703K180	NA	Low / Reverse	.071/1.8	72-On	AR	Kol - 15T - ID: 4.012"
18D	044705K180	NA	Center Support - Front & Rear	.071/1.8	72-On	AR	Kol - 8T - ID: 4.012"

STEEL CLUTCHES - HI-PERFORMANCE - UNIT PACKS (ONE Rebuild)

ILL	ALTO No.	REF No.	Description	Spec	Year	Qty	Notes
KT	044701KUP4	NA	UNIT PACK - Forward, Direct & OD Direct	.071/1.8	72-On	1	4 Kolene® Steels
KT	044703KUP4	NA	UNIT PACK - Low / Reverse	.071/1.8	72-On	1	4 Kolene® Steels
KT	044705KUP4	NA	UNIT PACK - Center Support - Front & Rear	.071/1.8	72-On	1	4 Kolene® Steels

PRESSURE PLATES

ILL	ALTO No.	REF No.	Description	Spec	Year	Qty	Notes
28A	044767	34618-30010	Overdrive Direct - cushion	.055/1.4	77-On	1	

FILTERS

ILL	ALTO No.	REF No.	Description	Spec	Year	Qty	Notes
30G	044940	35303-22020	Filter - A40, A41, A43		72-93	1	
30G	044942	35303-30031	Filter - A40D		77-85	1	
30G	044946	35303-30050	Filter - A42D, A43D, A44D		82-On	1	MD609545
30G	044948	35303-14010	Filter - A42DL, A43DL, A44DL, A45D/DF		79-On	1	
30G	044952	35303-30060	Filter - A43DE, A46DE		83-On	1	

METAL CLAD SEALS

ILL	ALTO No.	REF No.	Description	Spec	Year	Qty	Notes
31A	044400	90311-38020	Front Pump		72-On	1	

TOYOTA

A40 SERIES 1972-On

AW372 (R4AW2) / KM148 (V4AW2)

METAL CLAD SEALS

ILL	ALTO No.	REF No.	Description	Spec	Year	Qty	Notes
32G	044405	90303-38010	Extension Housing (without felt)	2.290	72-On	1	Toyota & Mazda 2wd
32G	044408A	09625009	Extension Housing - Isuzu	1.944	81-85	1	
32G	044408	94473633	Extension Housing - Isuzu	2.700	86-On	1	
32G	044407	MD951482	Extension Housing - AW372/ R4AW2	2.255	87-On	1	Mitsubishi 2wd
32G	044412	90310-40003	Adapter Housing - A43DL / A46DF	2.217	84-On	1	4wd
32G	044413	29792-57B01	Adapter Housing - GM / Suzuki (03-72L)	1.978	96-On	1	
32G	044409	MD609235	Adapter Housing - KM148 / V4AW2	2.700	87-On	1	
N I	044410	90311-11128	Manual Lever		72-On	1	
N I	044420	90310-09001	Speedometer		72-On	1	

SEALING RINGS

ILL	ALTO No.	REF No.	Description	Spec	Year	Qty	Notes
KT	044600		Sealing Ring Kit - 3 speed - 17M		72-93	1	
KT	044601	D457	Sealing Ring Kit - 4 speed - 21M / 1T		77-On	1	
KT	044601B	D456	Sealing Ring Kit - 4 speed - 14M / 1T		81-On	1	
40A	044100	35617-22010	Stator Support - 3 speed		72-81	2	
40A	044101	35617-22020	Stator Support - 4 speed		77-81	2	
40A	044101A	35617-16010	Stator Support - All		82-On	2	
41D	044101	35617-22020	Center Support - All		72-81	3	
41D	044101A	35617-16010	Center Support - All		82-On	3	
42B	044101	35617-22020	Overdrive Support - 4 speed		72-81	3	
42B	044101A	35617-16010	Overdrive Support - 4 speed		82-On	3	
43D	044103	35749-22010	Sun Gear - All except below	1.500	72-On	2	
43D	044106	35749-30010	Sun Gear - A43 series, A46DE, DL	1.750	72-On	2	
44F	044104	35735-22010	Output Shaft - All		72-On	3	
45F	044107	35748-30010	Intermediate Shaft - 4 speed	Teflon	77-On	1	

BUSHINGS

ILL	ALTO No.	REF No.	Description	Spec	Year	Qty	Notes
KT	044625	NA	Bushing Kit - 3 speed		72-93	1	
KT	044625	NA	Bushing Kit - 4 speed		77-On	1	
N I	044200	NA	Front Pump Body - All		77-On	1	
N I	044201	NA	Stator Shaft (Front & Rear) - Narrow	21.5mm	72-93	2	
N I	044202	NA	Stator Shaft (Front) - wide	21.5mm	77-On	1	
N I	044203	NA	Case (Rear)		72-On	1	
N I	044204	NA	Center Support		72-On	1	
N I	044205	NA	Sun Gear (Front & Rear)		72-On	2	
N I	044207	NA	Extension Housing		72-On	1	
N I	044207A	NA	Extension Housing - Mitsubishi		87-On	1	* Not in Kit
N I	044209	NA	Output Shaft		72-On	1	
N I	044210	NA	Overdrive Sun Gear - Front		77-On	1	
N I	044211	NA	Overdrive Sun Gear - Rear		77-On	1	

WASHERS

ILL	ALTO No.	REF No.	Description	Spec	Year	Qty	Notes
KT	044635	NA	Kit, A40, A41, A43		72-93	1	
KT	044635A	NA	Kit, A40D, A42D		77-91	1	
KT	044635B	NA	Kit, A43D, DE, DL, A46DE / DF		79-On	1	
KT	044635C	NA	Kit, A42DL, A44DL, A45DL		84-On	1	

TOYOTA

A40 SERIES 1972-On

AW372 (R4AW2) / KM148 (V4AW2)

WASHERS

ILL	ALTO No.	REF No.	Description	Spec	Year	Qty	Notes
50F	044154	35738-22010	Front Planet - A40, A40D	Plastic	72-93	1	
50F	044156	35738-30010	Front Planet - A43 series, A46DE, DF	Plastic	77-On	1	
50F	044158	35738-30030	Front Planet - A42DL, A44DL, A45DL	Plastic	77-On	1	
51E	044155	35739-22010	Rear Planet - A40, A40D	Plastic	72-93	1	
51E	044157	35739-30010	Rear Planet - A43 series, A46DE, DF	Plastic	77-On	1	
51E	044159	35739-30020	Rear Planet - A42DL, A44DL, A45DL	Plastic	77-On	1	

TOYOTA

A340E, H, F, 341E, 343E, 350E, AW4
R4AV3, V4AW3, AW30-40, AW30-43, AW30-80

A>

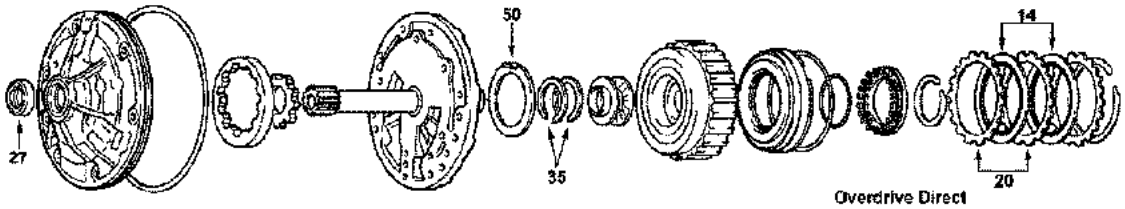

B>

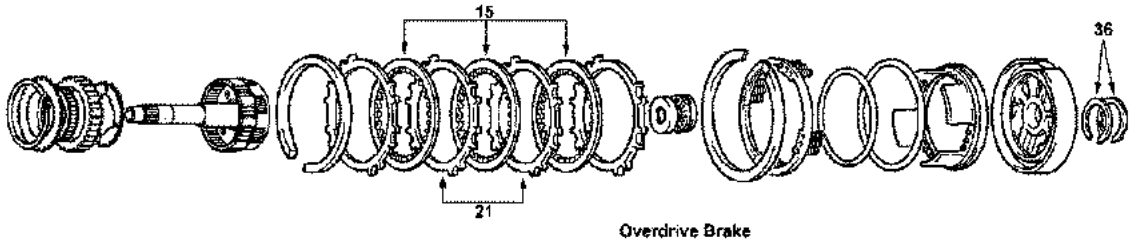

C>

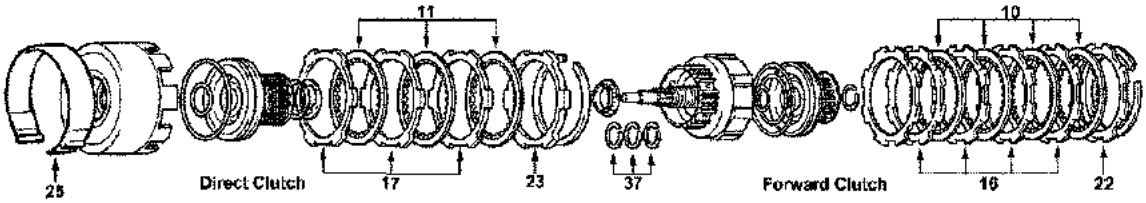

D>

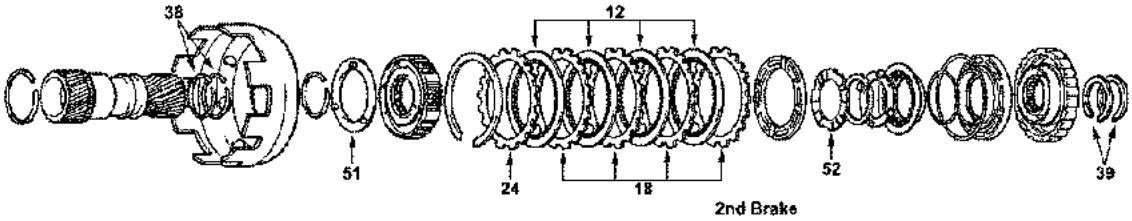

E>

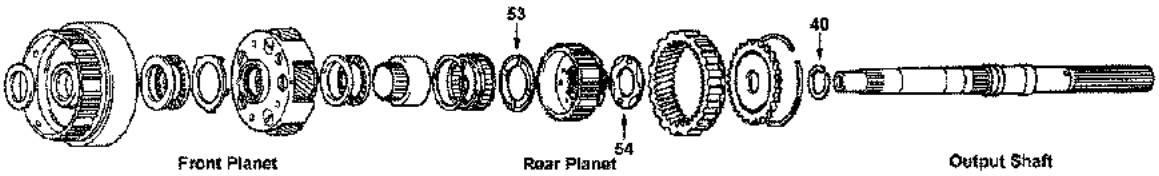

F>

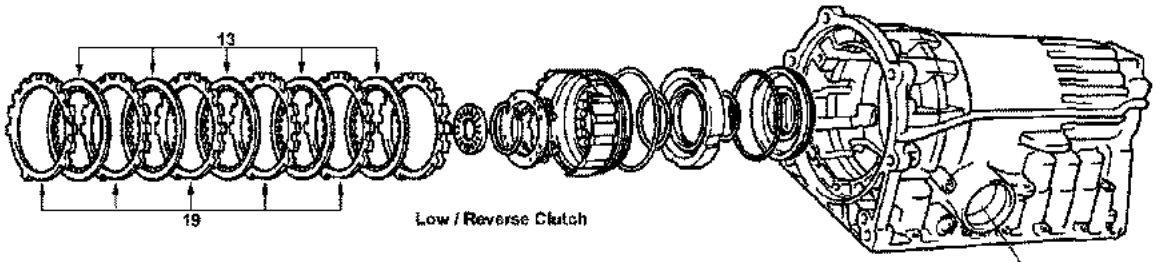

G>

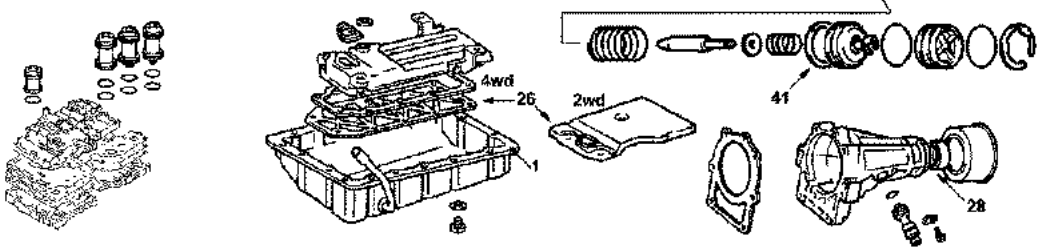

TOYOTA

A340E, H, F, 341E, 343E, 350E, AW4
R4AV3, V4AW3, AW30-40, AW30-43, AW30-80

KITS ***Add Suffix SK for Super Kit**

ILL	Description	Years	Friction Module	Steel Module	Overhaul Kit	Banner Kit	Master Kit
KT	Rebuilding Kit - TOYOTA CRESSIDA	85-92	073752A	073753A	073800	073901ALS	073901A
KT	Rebuilding Kit - TOYOTA SUPRA Non Turbo	86-97	073752A	073753A	073800	073901ALS	073901A
KT	Rebuilding Kit - TOYOTA SUPRA Non Turbo	98	073752F	073753D	073804	073907ALS	TBA
KT	Rebuilding Kit - TOYOTA SUPRA Turbo	85-93	073752C	073753H	073800	TBA	TBA
KT	Rebuilding Kit - TOYOTA SUPRA Turbo	94-98	073752F	073753F	073804	073907ALS	073907A
KT	Rebuilding Kit - TOYOTA SUPRA Non Turbo	94-98	073752A	073753J	073804	073907LS	073907B
KT	Rebuilding Kit - TOYOTA 4RUNNER & PICKUP 2WD 4 CYL	85-95	073752A	073753A	073800	073901ALS	073901A
KT	Rebuilding Kit - TOYOTA 4RUNNER & PICKUP 2WD 4 CYL	94-00	073752L	073753N	073800E	073907FLS	073907F
KT	Rebuilding Kit - TOYOTA 4RUNNER & PICKUP All 4WD	90-91	073752A	073753A	073800	073901ALS	073901A
KT	Rebuilding Kit - TOYOTA 4RUNNER & PICKUP All 4WD	92-95	073752A	073753N	073800	073901ALS	TBA
KT	Rebuilding Kit - TOYOTA 4RUNNER & PICKUP 4WD V6	96-99	073752S	073753S	073800	073915ALS	073915A
KT	Rebuilding Kit - TOYOTA LANDCRUISER A343	98-99	073752C	073753L	073800	073913LS	073913
KT	Rebuilding Kit - TOYOTA 4RUNNER & PICKUP 4WD V6	00-01	073752M	073753Q	073806	073915LS	073915
KT	Rebuilding Kit - TOYOTA LANDCRUISER A343F	8/99-On	073752C	073753P	073800	073913LS	073913A
KT	Rebuilding Kit - TOYOTA LANDCRUISER A343	00-On	073752M	073753Q	073806	073915LS	073915
KT	Rebuilding Kit - TOYOTA PREVIA (with SUPERCHARGER) 2WD	90-94	073752A	073753D	073804	073907LS	073907
KT	Rebuilding Kit - TOYOTA PREVIA (with SUPERCHARGER) 4WD	90-94	073752C	073753E	073804	073907CLS	073907C
KT	Rebuilding Kit - TOYOTA PREVIA (with SUPERCHARGER) 2WD & 4WD	95-96	073752A	073753D	073800D	073907DLS	073907D
KT	Rebuilding Kit - TOYOTA SEQUOIA	00-On	073752M	073753Q	073806	073915LS	073915
KT	Rebuilding Kit - TOYOTA T100 4 CYL.	93-97	073752L	073753D	073800	TBA	TBA
KT	Rebuilding Kit - TOYOTA T100 V6	93-94	073752A	073753E	073800	073901ALS	TBA
KT	Rebuilding Kit - TOYOTA T100 V6	95-98	073752S	073753S	073800	073915ALS	073915A
KT	Rebuilding Kit - TOYOTA TACOMA 4 CYL	95-97	073752C	073753K	073804	073907CLS	073909
KT	Rebuilding Kit - TOYOTA TACOMA 4 CYL	98-On	073752L	073753N	073800E	073907FLS	073907F
KT	Rebuilding Kit - TOYOTA TACOMA 6 CYL	95-On	073752L	073753L	073804	073909ALS	073909A
KT	Rebuilding Kit - TOYOTA TACOMA V6	95-7/00	073752S	073753S	073800	073915ALS	073915A
KT	Rebuilding Kit - TOYOTA TACOMA V6	8/00-On	073752M	073753Q	073806	073915LS	073915
KT	Rebuilding Kit - TOYOTA TUNDRA	99-On	073752M	073753Q	073806	073915LS	073915
KT	Rebuilding Kit - TOYOTA TRUCK - with and without Turbo	85-00	073752	073753	073800	073901LS	073901
KT	Rebuilding Kit - LEXUS LS400	95-97	073752H	073753H	073804	073905LS	073905
KT	Rebuilding Kit - LEXUS LX450, LX470 A343F	96-98	073752C	073753L	073800	073913LS	073913
KT	Rebuilding Kit - LEXUS LX450, LX470 A343F	99-On	073752M	073753Q	073806	073915LS	073915
KT	Rebuilding Kit - LEXUS SC300	92-On	073752A	073753D	073804	073907LS	073907
KT	Rebuilding Kit - LEXUS SC400	91-97	073752F	073753F	073804	073907ALS	073907A
KT	Rebuilding Kit - ISUZU TROOPER	88-91	073752A	073753A	073800	073901ALS	073901A
KT	Rebuilding Kit - JEEP All	87-01	073752C	073753C	073802	073901BLS	073901B
KT	Rebuilding Kit - MITSUBISHI MONTERO, PAJERO	94-95	073752C	073753E	073800E	073907ELS	073907E
KT	Rebuilding Kit - MITSUBISHI MONTERO, PAJERO	96-On	073752L	073753N	073800E	073907FLS	073907F
KT	Rebuilding Kit - VOLVO 960	91-97	073752H	073753M	073804	073911LS	073911
	COMBINATION KITS: 073752 replaces 073752A & 073752C						
	COMBINATION KITS: 073752F replaces 073752H						
	COMBINATION KITS: 073753 replaces 073753A, 073753E, 073753L						

TOYOTA

A340E, H, F, 341E, 343E, 350E, AW4
R4AV3, V4AW3, AW30-40, AW30-43, AW30-80

KITS

*Add Suffix SK for Super Kit

ILL	Description	Years	Friction Module	Steel Module	Overhaul Kit	Banner Kit	Master Kit
KT	Rebuilding Kit - LEXUS GS300 A350E	96-97	073752A	073753D	073804	073907LS	073907

MISCELLANEOUS GASKETS & KIT COMPONENTS

ILL	ALTO No.	REF No.	Description	Spec	Year	Qty	Notes
1G	073816	NA	Gasket, Oil Pan	Cork/Rub	85-On	1	OE is RTV

FRICTION CLUTCHES

ILL	ALTO No.	REF No.	Description	Spec	Year	Qty	Notes
10C	073700	35677-30090	Forward - Cars except SC/LS400 & Turbo	.083/2.1	85-On	4-5	HEG - 40T - OD: 4.973" - SM
10C	073700A	35677-26010	Forward - Trucks with V6 & Turbo	.067/1.7	93-On	3-5	HEG - 40T - OD: 4.973" - SM
10C	073700-190	35677-50020	Forward - Lexus SC/LS400	.075/1.9	92-On	6-7	HEG - 40T - OD: 4.973" - SM
10C	073700-200	35677-30170	Forward - Trucks with 4 cyl.	.078/2.0	93-On	5	HEG - 40T - OD: 4.973" - SM
11C	073702	Various	Direct	.083/2.1	85-On	3-4	HEG - 40T - OD: 5.178" - PLNI
12D	073704	35667-60010	2nd Brake	.078/2.0	85-On	4-5	HEG - 32T - OD: 5.178" - SM
13F	073706	35677-30180	Low / Reverse	.067/1.7	85-On	5-7	HEG - 32T - OD: 5.092" - SM
14A	073708	35633-30040	Overdrive Direct	.083/2.1	85-On	2	HEG - 32T - OD: 4.973" - SM
15B	073710	34633-60010	Overdrive Brake	.083/2.1	85-On	3-5	HEG - 24T - OD: 6.529" - SM

STEEL CLUTCHES

ILL	ALTO No.	REF No.	Description	Spec	Year	Qty	Notes
16C	073701	35634-33060	Forward - All	.078/2.0	85-91	4-5	8T - ID: 4.138"
16C	065701	35634-32010	Forward - Truck with V6 & Turbo	.071/1.8	92-On	6-7	8T - ID: 4.138"
16C	073701-230	35634-30110	Forward - Cars & 4 cyl. Trucks	.091/2.3	92-On	4-5	8T - ID: 4.138"
17C	073703	35647-30011	Direct	.091/2.3	85-99	1/4	6T - ID: 4.152"
17C	073703A	35634-30020	Direct	.071/1.8	93-99	3-4	6T - ID: 4.152"
17C	073723	35647-14010	Direct	.118/3.0	87-99	4	6T - ID: 4.152"
17C	142705-230	35647-22030	Direct	.091/2.3	00-On	4	24T - ID: 4.152"
18D	073705	35647-30030	2nd Brake	.071/1.8	85-On	1	16T - ID: 4.152"
18D	073725	35647-30020	2nd Brake	.098/2.5	85-On	4	16T - ID: 4.152"
19F	073707	35648-30031	Low / Reverse	.071/1.8	85-On	5-7	15T - ID: 4.319"
20A	073709	34616-30010	Overdrive Direct	.078/2.0	85-On	1-2	24T - ID: 4.127"
20A	073709A	34615-33010	Overdrive Direct	.118/3.0	85-On	AR	24T - ID: 4.127"
20A	073709-250	34616-50010	Overdrive Direct	.098/2.5	92-On	1	24T - ID: 4.127"
21B	073711	34634-30020	Overdrive Brake - small OD	.078/2.0	85-On	3-4	6T - ID: 5.634"
21B	073721	34634-30050	Overdrive Brake - large OD	.078/2.0	92-On	3-4	6T - ID: 5.634"

PRESSURE PLATES

ILL	ALTO No.	REF No.	Description	Spec	Year	Qty	Notes
22C	065760-260	35675-32030	Forward Top - selective	.102/2.6	85-On	AR	
22C	065760-280	35675-17010	Forward Top - selective	.110/2.8	85-On	AR	
22C	065760-300	35675-32010	Forward Top - selective	.118/3.0	85-On	AR	
22C	065760-320	35635-50050	Forward Top - selective	.125/3.2	85-On	AR	Marked "60"
22C	065760-337	35635-50040	Forward Top - selective	.133/3.37	85-On	AR	Marked "45"
22C	065760-360	35635-50030	Forward Top - selective	.141/3.6	85-On	AR	Marked "62"
22C	TBA	35635-50020	Forward Top - selective	.150/3.8	85-On	AR	Marked "44"
22C	TBA	35635-50010	Forward Top - selective	.157/4.0	85-On	AR	Marked "42"
22C	TBA	35635-30020	Forward Top - selective	.165/4.2	85-On	AR	Marked "63"
22C	TBA	35635-30030	Forward Top - selective	.173/4.4	85-On	AR	Marked "64"
23C	073723-400	35647-30040	Direct Top - selective	.157/4.0	85-On	AR	6T - ID: 4.152"

TOYOTA

A340E, H, F, 341E, 343E, 350E, AW4
R4AV3, V4AW3, AW30-40, AW30-43, AW30-80

PRESSURE PLATES

ILL	ALTO No.	REF No.	Description	Spec	Year	Qty	Notes
24D	073725-400	35647-30050	2nd Brake Top - selective	.157/4.0	85-On	AR	16T - ID: 4.152"

BANDS

ILL	ALTO No.	REF No.	Description	Spec	Year	Qty	Notes
25C	073950	35810-50020	2nd Coast Brake	Tan	85-On	1	

FILTERS

ILL	ALTO No.	REF No.	Description	Spec	Year	Qty	Notes
26G	073940	35330-30011	Filter - 2wd except below		85-On	1	
26G	073944	35330-50010	Filter - 2wd Lexus & Supra Turbo		85-On	1	
26G	073944A	35330-30020	Filter - 2wd GS300 (A350)		94-95	1	
26G	073944B	35330-30040	Filter - GS300 (A350E)		96-On	1	
26G	073942	35330-35010	Filter - 4wd (4" x 12") Rectangle		85-On	1	
26G	073942A	83504032	Filter - 4wd (5" x 10") Jeep		87-01	1	
26G	073942B	35330-22010	Filter - 4wd (3/8" pickup tube)		95-On	1	
26G	073946	35330-35020	Filter - 4wd (center pickup tube)		95-On	1	
26G	073946A	35330-60030	Filter - 343E 3 hole outlets		98-On	1	
26G	073948	35330-60020	Filter - 4wd (3/4" pickup tube)		95-On	1	

METAL CLAD SEALS

ILL	ALTO No.	REF No.	Description	Spec	Year	Qty	Notes
27A	044400	90311-38020	Front Pump		85-On	1	
28G	073402	90311-40001	Extension Housing - 2wd	1.600	85-On	1	
28G	073403	90311-38043	Extension Housing - 2wd	1.500	86-87	1	83504048 (Jeep)
28G	073404	90311-42024	Extension Housing - 2wd	2.173	90-On	1	
28G	073405	90311-40007	Adapter Housing - 4wd	2.295	90-On	1	
28G	073406	90311-48016	Adapter Housing - 4wd	2.455	95-On	1	
28G	073407	83504055	Adapter Housing - 4wd Jeep	2.440	87-On	1	
N I	044420	90310-09001	Speedometer		85-On	1	
N I	065410	90311-12002	Manual Lever		85-On	2-3	

SEALING RINGS

ILL	ALTO No.	REF No.	Description	Spec	Year	Qty	Notes
KT	073600	D465	Sealing Ring Kit - 3M / 10T		85-On	1	
35A	073100	35617-30020	Front Pump Stator		85-On	2	Teflon
36B	073100	35617-30020	OD Support Stator		85-On	2	Teflon
37C	073101	35712-30020	Input Shaft		85-On	3	Teflon
38D	044105	35749-30010	Sun Gear		85-On	2	Metal
39D	073100	35617-30020	Center Support		85-On	2	Teflon
40E	073103	35735-30020	Output Shaft		85-On	1	Metal
41G	073102	35865-30010	2nd Coast Brake Servo		85-On	1	Teflon

BUSHINGS

ILL	ALTO No.	REF No.	Description	Spec	Year	Qty	Notes
KT	073625	NA	Bushing Kit		85-On	1	
N I	044200	NA	Front Pump Body		85-On	1	
N I	044205	NA	Extension Housing - 35mm Yoke		85-On	1	
N I	044205A	NA	Extension Housing - 40mm Yoke		85-On	1	
N I	044205B	NA	Extension Housing - 44mm Yoke		85-On	1	

TOYOTA

A340E, H, F, 341E, 343E, 350E, AW4
R4AV3, V4AW3, AW30-40, AW30-43, AW30-80

WASHERS

ILL	ALTO No.	REF No.	Description	Spec	Year	Qty	Notes
KT	073635	NA	Washer Kit		85-On	1	
50A	073156	35616-30050	Direct Drum - 1 tab	Nylon	85-On	1	
51D	073153	35738-30040	Intermediate Sprag - Front	Nylon	85-On	1	
52D	073152	35729-30010	Intermediate Sprag - Rear	Nylon	85-On	1	
53E	073154	35739-30030	Rear Planet - Front	Nylon	85-On	1	
54E	073155	35737-30030	Rear Planet - Rear	Nylon	85-On	1	
55C	073151	35686-30010	Input Drum	Nylon	85-On	1	

TOYOTA
A340 TRANSFER CASE
1988-95

A>

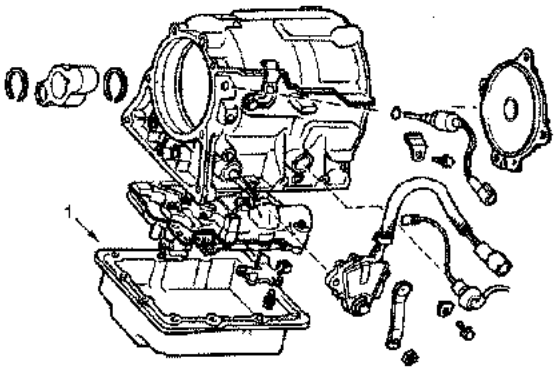

B>

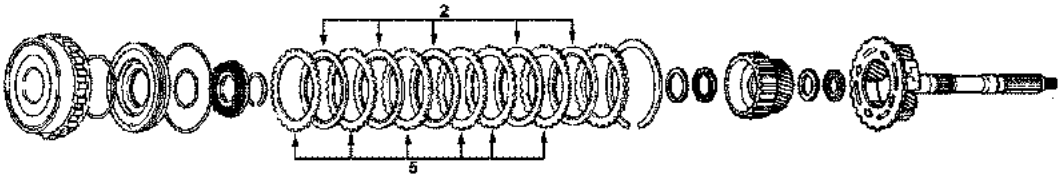

Direct Clutch (C3)

C>

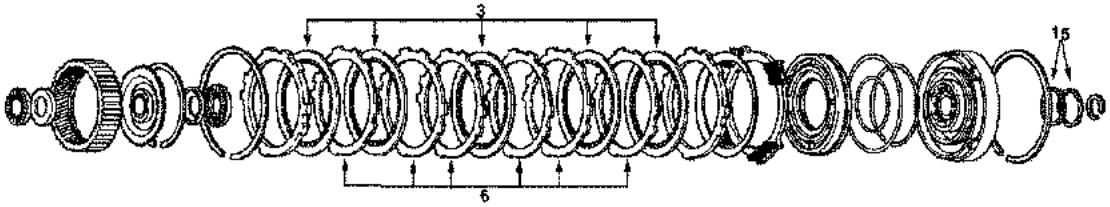

Low Speed Brake (B4)

D>

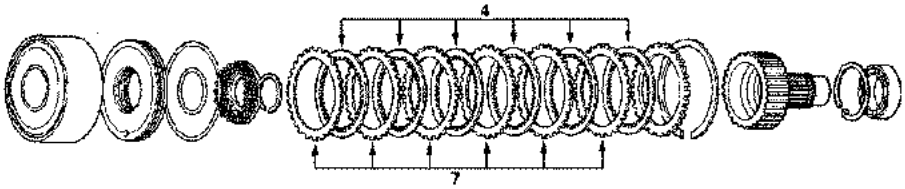

Front Drive Clutch (C4)

E>

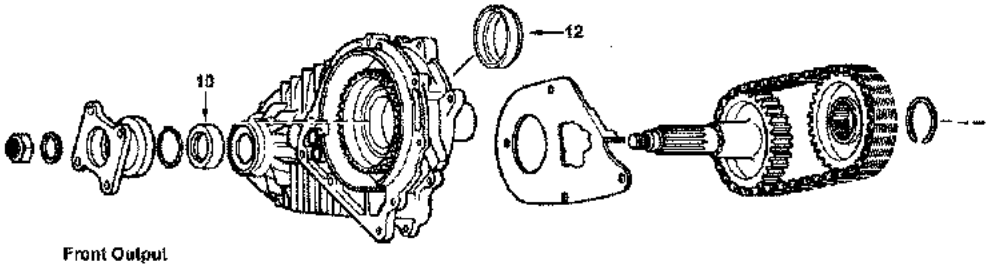

Front Output

F>

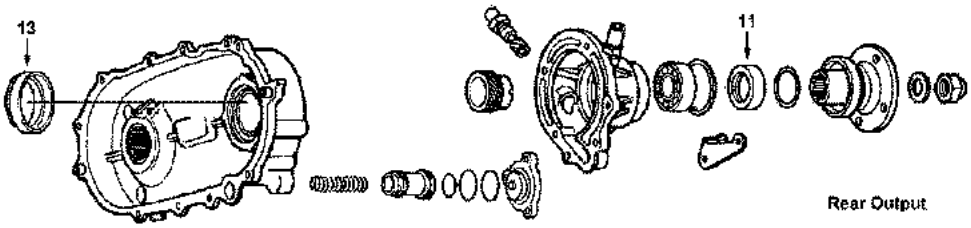

Rear Output

TOYOTA
A340 TRANSFER CASE
1988-95

KITS

*Add Suffix SK for Super Kit

ILL	Description	Years	Friction Module	Steel Module	Overhaul Kit	Banner Kit	Master Kit
KT	Rebuilding Kit	88-95	073752B	073753B	073800T	073903LS	073903

MISCELLANEOUS GASKETS & KIT COMPONENTS

ILL	ALTO No.	REF No.	Description	Spec	Year	Qty	Notes
1A	073818	NA	Gasket, Oil Pan	Cork/Rub	85-95	1	OE is RTV

FRICTION CLUTCHES

ILL	ALTO No.	REF No.	Description	Spec	Year	Qty	Notes
2B	073712	34653-35020	Direct (C3) Clutch	.067/1.7	88-95	6	HEG - 44T - OD: 5.597" - SM
3C	073714	34683-35020	Low Speed Brake (B4) Clutch	.067/1.7	88-95	7	Tan - 53T - OD: 6.808" - SM
4D	073712	34653-35020	Front Drive (C4) Clutch	.067/1.7	88-95	6	HEG - 44T - OD: 5.597" - SM

STEEL CLUTCHES

ILL	ALTO No.	REF No.	Description	Spec	Year	Qty	Notes
5B	073713	34656-35010	Direct (C3) Clutch	.071/1.8	88-95	5	29T - ID: 4.580"
5B	073713-255	34656-35020	Direct (C3) Clutch	.100/2.55	88-95	5	29T - ID: 4.580"
6C	073715	34686-35010	Low Speed Brake (B4) Clutch	.071/1.8	88-95	4-6	8T - ID: 5.954"
7D	073713	34656-35010	Front Drive (C4) Clutch	.071/1.8	88-95	6	29T - ID: 4.580"

METAL CLAD SEALS

ILL	ALTO No.	REF No.	Description	Spec	Year	Qty	Notes
10E	TBA	90316-40001	Front Output shaft	2.295	88-95	1	
11F	TBA	90316-40001	Rear Output shaft	2.295	88-95	1	
12E	TBA	90310-58001	Chain Case - Front	75mm	88-95	1	
12E	TBA	90310-77001	Chain Case - Front	77mm	88-95	1	
12E	TBA	90310-58002	Chain Case - Front (1 pc)	Combo	88-95	1	
13F	TBA	90310-58001	Chain Case - Rear	75mm	88-95	1	
13F	TBA	90310-77001	Chain Case - Rear	77mm	88-95	1	
13F	TBA	90310-58002	Chain Case - Rear (1 pc)	Combo	88-95	1	
N I	073405	90311-40007	Adapter to Transfer Case	2.295	88-95	1	
N I	TBA	90311-15008	Case - Fork shaft side		88-95	2	
N I	TBA	90311-41006	Case - Output side		88-95	1	

SEALING RINGS

ILL	ALTO No.	REF No.	Description	Spec	Year	Qty	Notes
N I	044100	35617-22010	Direct (C3) Drum		88-95	2	
15C	044101	35617-22020	Center Support		88-95	2	

TOYOTA

A440F 1985-92
A442F 1993-95

A>

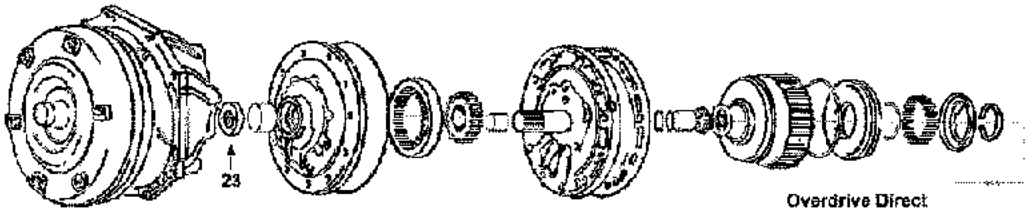

B>

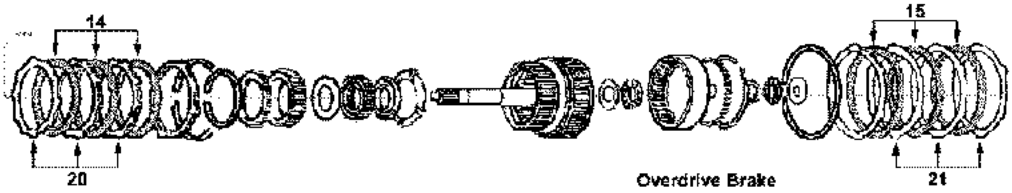

C>

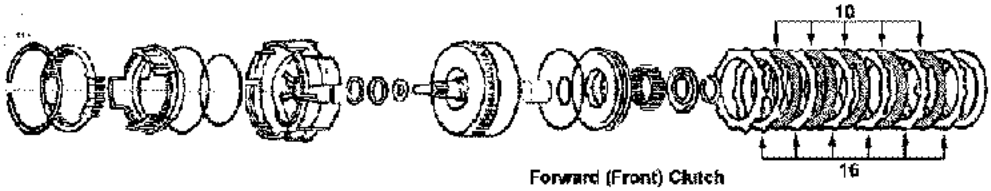

D>

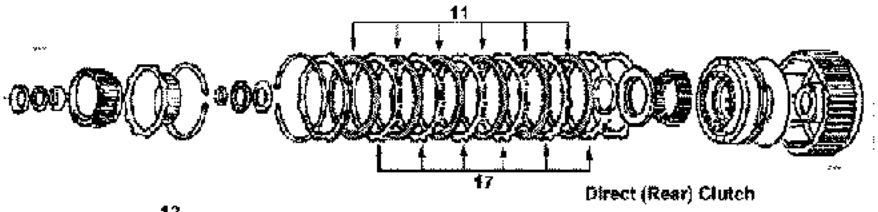

E>

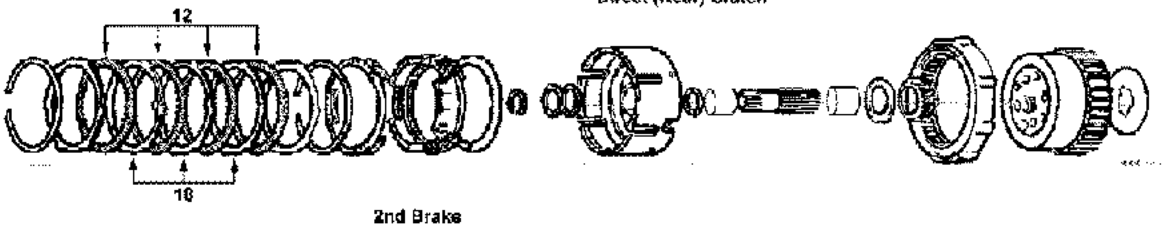

F>

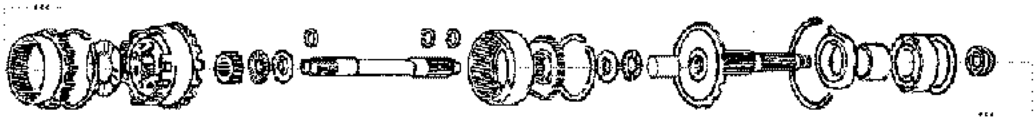

G>

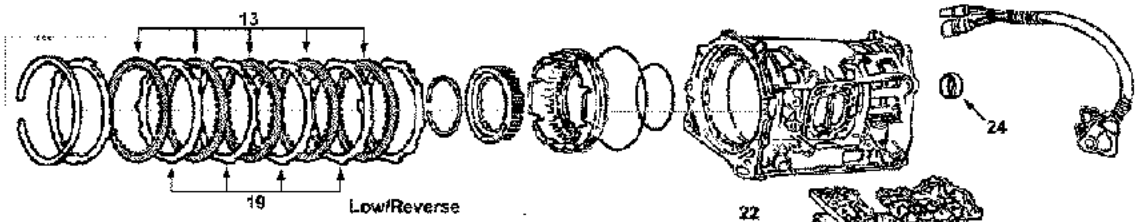

H>

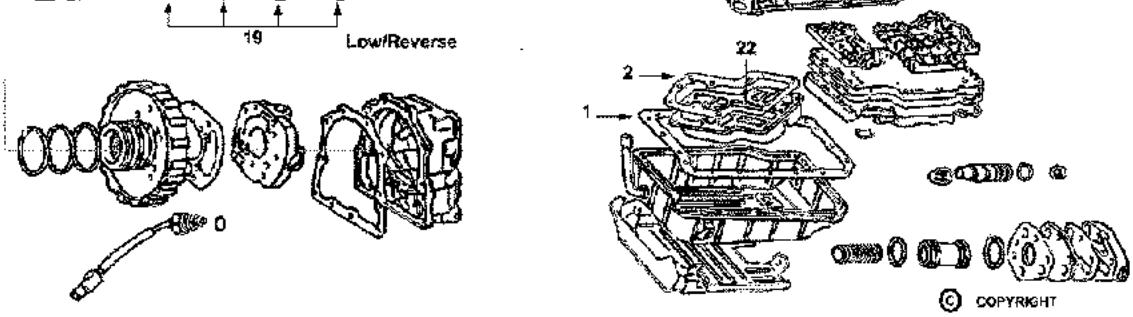

© COPYRIGHT
1999 AMERICAN DATA GRAPHICS, INC.

TOYOTA

A440F 1985-92
A442F 1993-95

KITS

*Add Suffix SK for Super Kit

ILL	Description	Years	Friction Module	Steel Module	Overhaul Kit	Banner Kit	Master Kit
KT	Rebuilding Kit - A440	85-89	083752	083753	083800	083901LS	083901
KT	Rebuilding Kit - A440	90-92	083752	083753A	083800	083901LS	083903
KT	Rebuilding Kit - A442	93-95	083752A	083753B	083802	083905LS	083905

MISCELLANEOUS GASKETS & KIT COMPONENTS

ILL	ALTO No.	REF No.	Description	Spec	Year	Qty	Notes
1H	083816	35168-36010	Gasket, Oil Pan	Cork/Rub	85-95	1	
2H	083004	35339-60010	Gasket, Filter		85-92	1	

FRICTION CLUTCHES

ILL	ALTO No.	REF No.	Description	Spec	Year	Qty	Notes
10C	083700	35633-60040	Forward (Front)	.083/2.1	85-95	6-7	HEG - 46T - OD: 4.987" - SM
10C	083700-170	35677-40020	Forward (Front) - Some overseas Type A60 (03-95)	.067/1.7	95	6-7	HEG - 46T - OD: 4.987" - SM
11D	083700	35633-60040	Direct (Rear)	.083/2.1	85-95	5	HEG - 46T - OD: 4.987" - SM
12E	083702	35633-36060	2nd Brake (Intermediate)	.083/2.1	85-95	4-5	HEG - 70T - OD: 6.887" - SM
13G	083704	35633-60030	Low / Reverse	.067/1.7	85-95	6	HEG - 70T - OD: 6.887" - SM
14B	083700	35633-36040	Overdrive Direct	.083/2.1	85-95	3	HEG - 46T - OD: 4.987" - SM
14B	083710-210	NA	Overdrive Direct - Some overseas (A442F)	.083/2.1	95	3	HEG - 47T - OD: 4.987" - SM
15B	083702	35633-36060	Overdrive Brake - A440F	.083/2.1	85-92	3	HEG - 70T - OD: 6.887" - SM
15B	083702A	35633-36050	Overdrive Brake - A442F	.083/2.1	93-95	3	HEG - 75T - OD: 7.237" - SM
15B	083712-210	NA	Overdrive Brake - Some overseas (A442F)	.083/2.1	95	3	HEG - 20T - OD: 7.229" - SM

STEEL CLUTCHES

ILL	ALTO No.	REF No.	Description	Spec	Year	Qty	Notes
16C	083701	35634-36010	Forward (Front)	.071/1.8	85-95	6	10T - ID: 3.997"
16C	083701-200	35634-36040	Forward (Front) - selective	.078/2.0	85-95	AR	10T - ID: 3.997"
16C	083701-220	35634-36050	Forward (Front) - selective	.087/2.2	85-95	AR	10T - ID: 3.997"
16C	083701-240	35634-36020	Forward (Front) - selective	.095/2.4	85-95	AR	10T - ID: 3.997"
17D	083701	35634-36010	Direct (Rear)	.071/1.8	85-95	6	10T - ID: 3.997"
18E	083703	35632-36010	2nd Brake (Intermediate)	.095/2.4	85-90	7	6T - ID: 5.995"
18E	083703-200	35632-60040	2nd Brake (Intermediate)	.078/2.0	91-95	4	6T - ID: 5.995"
19G	083705	35632-36020	Low / Reverse - A440F	.071/1.8	85-92	6	16T - ID: 5.995"
19G	083705-240	35632-60030	Low / Reverse - A442F	.095/2.4	93-95	6	16T - ID: 5.995"
20B	083701	35634-36010	Overdrive Direct	.071/1.8	85-95	6	10T - ID: 3.997"
20B	083711-200	NA	Overdrive Direct - Some overseas (A442F)	.078/2.0	95	3	20T - ID: 4.048"
21B	083703	35632-36010	Overdrive Brake - A440F	.095/2.4	85-92	3	6T - ID: 5.995"
21B	083703-200	35632-60040	Overdrive Brake - A442F	.078/2.0	93-95	3	6T - ID: 5.995"
21B	083713-400	35632-60020	Overdrive Brake - A442F	.157/4.0	93-95	1	6T - ID: 5.995"
21B	083703A240	NA	Overdrive Brake - Some overseas (A442F)	.095/2.4	95	3	6T - ID: 6.402"

TOYOTA

A440F 1985-92
A442F 1993-95

STEEL CLUTCHES - HI-PERFORMANCE - Kolene®

ILL	ALTO No.	REF No.	Description	Spec	Year	Qty	Notes
16C	083701K180	NA	Forward (Front)	.071/1.8	85-95	6	Kol - 10T - ID: 3.997"
18E	083703K200	NA	2nd Brake (Intermediate)	.078/2.0	91-95	4	Kol - 6T - ID: 5.995"
19G	083705K240	NA	Low / Reverse - A442F	.095/2.4	93-95	6	Kol - 16T - ID: 5.995"
20B	083711K200	NA	Overdrive Direct - Some overseas (A442F)	.078/2.0	95	3	Kol - 20T - ID: 4.048"
21B	083703AK240	NA	Overdrive Brake - Some overseas (A442F)	.095/2.4	95	3	Kol - 6T - ID: 5.995"

FILTERS

ILL	ALTO No.	REF No.	Description	Spec	Year	Qty	Notes
22H	083940	35303-60011	Filter - A440F (Shallow)	.375"	85-92	1	
22H	083942	35303-60010	Filter - A440F (Deep)	2.0"	85-92	1	
22H	083944	35330-60010	Filter - A442F		93-95	1	

METAL CLAD SEALS

ILL	ALTO No.	REF No.	Description	Spec	Year	Qty	Notes
23A	083400	90311-42010	Front Pump		85-95	1	
23A	042400	NA	Front Pump (will work)		85-95	1	
24G	083405	90311-48016	Adapter Housing (4x4)		85-95	1	

SEALING RINGS

ILL	ALTO No.	REF No.	Description	Spec	Year	Qty	Notes
KT	083600	NA	Sealing Ring Kit - A440F		85-92	1	
KT	083601	NA	Sealing Ring Kit - A442F		93-95	1	

TOYOTA
A650E
1998-On

KITS

*Add Suffix SK for Super Kit

ILL	Description	Years	Friction Module	Steel Module	Overhaul Kit	Banner Kit	Master Kit
KT	Rebuilding Kit	98-On	142752	142753	142800	142901LS	142901

FRICTION CLUTCHES

ILL	ALTO No.	REF No.	Description	Spec	Year	Qty	Notes
N I	073700-190	35677-30150	Forward	.075/1.9	98-On	5-6	HEG - 40T - OD: 4.973" - SM
N I	142704-170	NA	Direct	.067/1.7	98-On	5	HEG - 40T - OD: 5.178" - SM
N I	142702-170	35683-30010	Low / Reverse	.067/1.7	98-On	6	HEG - 44T - OD: 5.420" - SM
N I	142706-180	NA	2nd Brake	.071/1.8	98-On	5	HEG - 36T - OD: 5.940" - PL
N I	142708-220	NA	3rd Brake	.087/2.2	98-On	5	HEG - 35T - OD: 5.575" - WF
N I	073708	35633-30040	Overdrive Direct	.083/2.1	98-On	2	HEG - 32T - OD: 4.970" - SM
N I	073710	34633-60010	Overdrive Brake	.081/2.05	98-On	4	HEG - 24T - OD: 6.529" - SM

STEEL CLUTCHES

ILL	ALTO No.	REF No.	Description	Spec	Year	Qty	Notes
N I	065701	35634-32010	Forward	.071/1.8	98-On	5-6	8T - ID: 4.138"
N I	065701-140	35634-33020	Forward	.055/1.4	98-On	1	8T - ID: 4.138"
N I	073701-230	35634-30110	Forward (SC400/430)	.091/2.3	98-On	5	8T - ID: 4.135"
N I	142705-180	NA	Direct	.071/1.8	98-On	5	24T - ID: 4.155"
N I	142703-180	35693-30020	Low / Reverse	.071/1.8	98-On	5	18T - ID: 4.872"
N I	142707-270	NA	2nd Brake	.106/2.7	98-On	4	8T - ID: 5.175"
N I	142707-200	NA	2nd Brake	.078/2.0	98-On	1	8T - ID: 5.175"
N I	142709-290	NA	3rd Brake	.114/2.9	98-On	5	23T - ID: 4.861"
N I	073709	34616-30010	Overdrive Direct	.078/2.0	98-On	2	24T - ID: 4.127"
N I	073709-250	34616-50010	Overdrive Direct	.098/2.5	98-On	1	24T - ID: 4.127"
N I	073721	34634-30050	Overdrive Brake	.078/2.0	98-On	3	6T - ID: 5.634"

PRESSURE PLATES

ILL	ALTO No.	REF No.	Description	Spec	Year	Qty	Notes
N I	065760-300	35635-50060	Forward - selective "61"	.118/3.0	98-On	AR	
N I	065760-320	35635-50050	Forward - selective "60"	.126/3.2	98-On	AR	
N I	065760-337	35635-50040	Forward - selective "45"	.134/3.4	98-On	AR	
N I	TBA	35635-50030	Forward - selective "62"	.142/3.6	98-On	AR	
N I	TBA	35635-50020	Forward - selective "44"	.150/3.8	98-On	AR	
N I	TBA	35635-50010	Forward - selective "42"	.157/4.0	98-On	AR	
N I	TBA	35635-30020	Forward - selective "63"	.165/4.2	98-On	AR	
N I	TBA	35635-30030	Forward - selective "64"	.173/4.4	98-On	AR	
N I	TBA	35675-22030	Direct - selective	.130/3.3	98-On	AR	
N I	TBA	35675-22040	Direct - selective	.134/3.4	98-On	AR	
N I	TBA	35675-22050	Direct - selective	.138/3.5	98-On	AR	
N I	TBA	35675-22060	Direct - selective	.142/3.6	98-On	AR	
N I	TBA	35675-22070	Direct - selective	.146/3.7	98-On	AR	
N I	TBA	35675-22080	Direct - selective	.150/3.8	98-On	AR	
N I	TBA	35675-22090	Direct - selective	.154/3.9	98-On	AR	
N I	TBA	35675-22100	Direct - selective	.157/4.0	98-On	AR	
N I	TBA	35675-30180	Direct - selective	.161/4.1	98-On	AR	
N I	TBA	35696-30010	Low / Reverse - selective	.078/2.0	98-On	AR	
N I	TBA	35696-30020	Low / Reverse - selective	.087/2.2	98-On	AR	
N I	TBA	35696-30030	Low / Reverse - selective	.094/2.4	98-On	AR	
N I	TBA	35696-30040	Low / Reverse - selective	.102/2.6	98-On	AR	

TOYOTA
A650E
1998-On

PRESSURE PLATES

ILL	ALTO No.	REF No.	Description	Spec	Year	Qty	Notes
N I	TBA	35696-30050	Low / Reverse - selective	.110/2.8	98-On	AR	
N I	TBA	35696-30060	Low / Reverse - selective	.118/3.0	98-On	AR	
N I	TBA	35679-30010	Low / Reverse - Top (Bevel)	.236/6.0	98-On	1	
N I	TBA	35676-30180	2nd Brake - Top & Bottom selective	.142/3.6	98-On	AR	
N I	TBA	35676-30190	2nd Brake - Top & Bottom selective	.145/3.7	98-On	AR	
N I	TBA	35676-30200	2nd Brake - Top & Bottom selective	.150/3.8	98-On	AR	
N I	TBA	35676-30210	2nd Brake - Top & Bottom selective	.154/3.9	98-On	AR	
N I	TBA	35676-30220	2nd Brake - Top & Bottom selective	.157/4.0	98-On	AR	
N I	TBA	35676-30230	2nd Brake - Top & Bottom selective	.161/4.1	98-On	AR	
N I	TBA	35695-30010	3rd Brake - Bottom selective	.083/2.1	98-On	AR	
N I	TBA	35695-30020	3rd Brake - Bottom selective	.090/2.3	98-On	AR	
N I	TBA	35695-30030	3rd Brake - Bottom selective	.098/2.5	98-On	AR	
N I	TBA	35695-30040	3rd Brake - Bottom selective	.106/2.7	98-On	AR	
N I	142709-290	35695-30050	3rd Brake - Bottom selective	.114/2.9	98-On	AR	
N I	TBA	35695-30060	3rd Brake - Bottom selective	.122/3.1	98-On	AR	

BANDS

ILL	ALTO No.	REF No.	Description	Spec	Year	Qty	Notes
N I	073950	35810-14010	2nd Coast Brake	Tan	98-On	1	

FILTERS

ILL	ALTO No.	REF No.	Description	Spec	Year	Qty	Notes
N I	142940A	35330-30050	Filter		98-00	1	
N I	142942	35330-30070	Filter		01-On	1	
N I	142944A	35330-53010	Filter		00-On	1	

METAL CLAD SEALS

ILL	ALTO No.	REF No.	Description	Spec	Year	Qty	Notes
N I	044400	90311-38020	Front Pump		98-On	1	
N I	073404	90311-42024	Extension Housing	2.173	98-On	1	
N I	065410	90311-12002	Manual Lever		98-On	2	

SEALING RINGS

ILL	ALTO No.	REF No.	Description	Spec	Year	Qty	Notes
KT	142600	NA	Sealing Ring Kit		98-On	1	

TOYOTA

A750E, A750F 5 SPEED RWD

2003-On

KITS

*Add Suffix SK for Super Kit

ILL	Description	Years	Friction Module	Steel Module	Overhaul Kit	Banner Kit	Master Kit
KT	Rebuilding Kit with 1 Piston	03-On	173752	173753	173800A	173901XLS	173901X

KITS - HI-PERFORMANCE Red Eagle® & Kolene®

ILL	Description	Years	Friction Module	Steel Module	Overhaul Kit	Banner Kit	Master Kit
KT	Rebuilding Kit with 1 Piston	03-On	173752HP	173753HP	173800A	173901XHPLS	173901XHP

FRICTION CLUTCHES

ILL	ALTO No.	REF No.	Description	Spec	Year	Qty	Notes
N I	173700-150	35667-60020	Direct	.059/1.5	03-On	5	HEG - 36T - OD: 6.372" - SB
N I	173702-150	35677-60010	Rear	.059/1.5	03-On	5	HEG - 40T - OD: 6.372" - SB
N I	173704-190	35633-60070	Forward	.075/1.9	03-On	6	HEG - 30T - OD: 4.712" - SB
N I	173708-180	35681-60010	#1 Brake	.072/1.83	03-On	3	HEG - 40T - OD: 6.233" - SB
N I	173710-150	35682-60010	#2 Brake	.061/1.55	03-On	3	HEG - 40T - OD: 5.444" - SB
N I	173706-185	35693-60010	#3 Brake - wide spline	.074/1.88	03-On	4	HEG - 40T - OD: 6.439" - WF
N I	173712-150	35684-60010	#4 Brake	.061/1.55	03-On	8	HEG - 48T - OD: 5.528" - PLNI

FRICTION CLUTCHES - HI-PERFORMANCE Red Eagle®

ILL	ALTO No.	REF No.	Description	Spec	Year	Qty	Notes
N I	173742-150	NA	Rear	.059/1.5	03-On	5	Red - 40T - OD: 6.372" - SB
N I	173744-190	NA	Forward	.075/1.9	03-On	6	Red - 30T - OD: 4.712" - SB
N I	173748-180	NA	#1 Brake	.072/1.83	03-On	3	Red - 40T - OD: 6.233" - SB
N I	188744-190	NA	#2 Brake - narrow spline	.074/1.88	05-On	4	Red - 40T - OD: 6.439" - WF
N I	173743-150	NA	#4 Brake	.061/1.55	03-On	8	Red - 48T - OD: 5.528" - PLNI

STEEL CLUTCHES

ILL	ALTO No.	REF No.	Description	Spec	Year	Qty	Notes
N I	173701-180	35647-60010	Direct & Rear	.071/1.8	03-On	6-10	24T - ID: 5.866"
N I	173701-240	35648-60010	Rear	.095/2.41	03-On	4	24T - ID: 5.866"
N I	173705-180	35634-60020	Forward	.071/1.8	03-On	5	24T - ID: 4.173""
N I	173709-240	35691-60010	#1 Brake	.094/2.39	03-On	3	13T - ID: 5.527"
N I	173711-200	35692-60010	#2 Brake	.079/2.01	03-On	3	13T - ID: 4.537"
N I	173707-200	35683-60010	#3 Brake	.079/2.01	03-On	4	16T - ID: 5.194"
N I	173713-180	35694-60010	#4 Brake	.071/1.8	03-On	7	16T - ID: 4.922"

STEEL CLUTCHES - HI-PERFORMANCE - Kolene®

ILL	ALTO No.	REF No.	Description	Spec	Year	Qty	Notes
N I	173701-180	NA	Direct & Rear	.071/1.8	03-On	6-10	Kol - 24T - ID: 5.866"
N I	173701-240	NA	Rear	.095/2.41	03-On	4	Kol - 24T - ID: 5.866"
N I	173705-180	NA	Forward	.071/1.8	03-On	5	Kol - 24T - ID: 4.173""
N I	173709-240	NA	#1 Brake	.094/2.39	03-On	3	Kol - 13T - ID: 5.527"
N I	173711-200	NA	#2 Brake	.079/2.01	03-On	3	Kol - 13T - ID: 4.537"
N I	173707-200	NA	#3 Brake	.079/2.01	03-On	4	Kol - 16T - ID: 5.194"
N I	173713-180	NA	#4 Brake	.071/1.8	03-On	7	Kol - 16T - ID: 4.922"

FILTERS

ILL	ALTO No.	REF No.	Description	Spec	Year	Qty	Notes
N I	173940	35330-60050	Filter		03-On	1	

TOYOTA

A760E/H, A761E/F/H 6 SPEED RWD
2005-On

KITS

*Add Suffix SK for Super Kit

ILL	Description	Years	Friction Module	Steel Module	Overhaul Kit	Banner Kit	Master Kit
KT	Rebuilding Kit - Lexus LS430 with Molded Pistons	05-On	173752A	173753A	173802A	173903LS	173903
KT	Rebuilding Kit - Lexus LS430 without Molded Pistons	05-On	173752A	173753A	173802AX	173903XLS	173903X
KT	Rebuilding Kit - A761F with Molded Pistons	05-On	173752B	173753B	173802A	173905LS	173905
KT	Rebuilding Kit - A761F without Molded Pistons	05-On	173752B	173753B	173802AX	173905XLS	173905X

FRICTION CLUTCHES

ILL	ALTO No.	REF No.	Description	Spec	Year	Qty	Notes
N I	173702-150	35634-50010	Input	.059/1.5	05-On	5	HEG - 40T - OD:6.372" - PLI
N I	173700-150	35667-60020	Direct	.060/1.52	05-On	5	HEG - 36T - OD:6.372" - SB
N I	173706-185	35693-60010	Reverse	.074/1.8	05-On	4	HEG - 40T - OD:6.439" - SB
N I	173712-150	35684-60010	Low / Reverse	.061/1.55	05-On	4	HEG - 48T - OD:5.528" - SB
N I	188708-155	35677-50040	Reverse	.061/1.55	05-On	3	HEG - 30T - OD:4.500" - SB
N I	188710-150	NA	Coast	.058/1.47	05-On	4	HEG - 30T - OD:4.712" - SB
N I	188710-183	35633-0c030	Coast	.072/1.83	05-On	5	HEG - 30T - OD: 4.700" - SB
N I	173708-180	35681-60010	Underdrive	.075/1.91	05-On	3	HEG - 40T - OD:6.233" - SB
N I	173710-150	35682-60010	Overdrive	.063/1.6	05-On	4	HEG - 40T - OD:5.446" - SB

STEEL CLUTCHES

ILL	ALTO No.	REF No.	Description	Spec	Year	Qty	Notes
N I	173701-240	35648-50010	Input	.094/2.39	05-On	4	24T - ID: 5.870"
N I	173701-180	35633-50010	Direct	.071/1.8	05-On	6	24T - ID:5.870"
N I	173707-200	35683-60010	Intermediate	.080/2.03	05-On	4	16T - ID:5.200"
N I	173713-180	35694-60011	Low / Reverse	.071/1.8	05-On	4	16T - ID:4.910"
N I	188709-180	35695-50010	Reverse	.071/1.8	05-On	3	24T - ID:3.960"
N I	188711-245	35634-50010	Coast	.096/2.44	05-On	4	24T - ID:4.170"
N I	173709-240	35691-60010	Underdrive	.094/2.39	05-On	3	13T - ID:5.520"
N I	188713-220	NA	Underdrive - selective	.087/2.21	05-On	1	13T - ID:5.520"
N I	173711-200	35692-60010	Overdrive	.079/2.01	05-On	3	13T - ID:4.530"
N I	188715-220	NA	Overdrive - selective	.087/2.21	05-On	1	13T - ID:4.530"

FILTERS

ILL	ALTO No.	REF No.	Description	Spec	Year	Qty	Notes
N I	173942	35330-50020	Filter - sump		05-On	1	

PISTONS

ILL	ALTO No.	REF No.	Description	Spec	Year	Qty	Notes
KT	173670	NA	Piston Kit		05-On	1	3 pistons

TOYOTA

A960E LEXUS IS250/IS350, GS300/GS430
6 SPEED 2006-On

KITS

*Add Suffix SK for Super Kit

ILL	Description	Years	Friction Module	Steel Module	Overhaul Kit	Banner Kit	Master Kit
KT	Rebuilding Kit - with Molded Pistons	06-On	203752	203753	203800	203901LS	203901
KT	Rebuilding Kit - without Molded Pistons	06-On	203752	203753	203800X	203901XLS	203901X

FRICTION CLUTCHES

ILL	ALTO No.	REF No.	Description	Spec	Year	Qty	Notes
N I	203700-150	35633-22070	Forward	.059/1.5	06-On	5	HEG - 30T - OD: 4.248" - SB
N I	203702-150	35677-22100	Reverse	.059/1.5	06-On	5	HEG - 40T - OD: 5.975" - Specl
N I	203704-150	35667-22030	Direct	.059/1.5	06-On	5	HEG - 36T - OD: 5.972" - SB
N I	203706-183	35681-22010	Underdrive (Brake #1)	.072/1.83	06-On	3	HEG - 40T - OD: 5.749" - SB
N I	203708-155	35682-22010	Overdrive (Brake #2)	.061/1.55	06-On	4	HEG - 35T - OD: 4.860" - SB
N I	203710-188	35066-22020	Intermediate (Brake #3)	.074/1.88	06-On	3-4	HEG - 36T - OD: 5.950" - WF
N I	203712-155	35684-22010	Low/Reverse (Brake #4)	.061/1.55	06-On	5	HEG - 42T - OD: 4.880" - SB
N I	203714-150	35685-22010	Coast	.059/1.5	06-On	5	HEG - 30T - OD: 4.043" - WF

STEEL CLUTCHES

ILL	ALTO No.	REF No.	Description	Spec	Year	Qty	Notes
N I	203701-180	35634-22110	Forward	.071/1.8	06-On	4	24T - ID: 3.690"
N I	203703-240	35648-22020	Reverse	.095/2.4	06-On	4	24T - ID: 5.405"
N I	203705-180	35647-22040	Direct	.071/1.8	06-On	5	24T - ID: 5.482"
N I	203707-240	35691-22020	Underdrive (Brake #1)	.095/2.4	06-On	3-4	12T - ID: 5.016"
N I	203709-200	35692-22010	Overdrive (Brake #2)	.079/2.0	06-On	3	13T - ID: 4.092"
N I	203711-200	NA	Intermediate (Brake #3)	.079/2.0	06-On	3-4	16T - ID: 4.680"
N I	203713-178	35694-22010	Low/Reverse (Brake #4)	.070/1.78	06-On	4	16T - ID: 4.330"
N I	203715-180	35695-22010	Coast	.071/1.8	06-On	4	24T - ID: 3.546"

FILTERS

ILL	ALTO No.	REF No.	Description	Spec	Year	Qty	Notes
N I	203940	NA	Filter		06-On	1	

MOLDED PISTONS

ILL	ALTO No.	REF No.	Description	Spec	Year	Qty	Notes
KT	203670	NA	Piston Kit		06-On	1	2 pistons

TOYOTA

AA80E, TL80-SN

GS460, LS460, IS/F 2007-On

KITS

ILL	Description	Years	Friction Module	Steel Module	Overhaul Kit	Banner Kit	Master Kit
KT	Rebuilding Kit- GS460, LS460, IS/F	07-On	207752	207753	207800	207901LS	207901

FRICTION CLUTCHES

ILL	ALTO No.	REF No.	Description	Spec	Year	Qty	Notes
NI	207700-180	NA	Forward	.071/1.80	07-On	6	HEG - 48T - OD: 6.575" - SB
NI	207702-183	NA	Reverse	.072/1.83	07-On	5	HEG - 36T - OD: 5.773" - SB
NI	185706-200	NA	Direct	.079/2.01	07-On	7	HEG - 42T - OD: 5.388"- SB
NI	207706-206	NA	Overdrive	.081/2.06	07-On	4	HEG - 38T - OD: 6.990" - SB
NI	207708-188	NA	Brake #1	.074/1.88	07-On	5	HEG - 36T - OD: 8.011" - SB
NI	207710-155	NA	Brake #2	.061/1.55	07-On	4	HEG - 50T - OD: 7.087" - SB

STEEL CLUTCHES

ILL	ALTO No.	REF No.	Description	Spec	Year	Qty	Notes
NI	185707-200	NA	Direct	.079/2.0	07-On	7	36T- ID: 4.496"
NI	207701-200	NA	Forward	.077/1.96	07-On	6	36T- ID: 5.966"
NI	207703-200	NA	Reverse	.077/1.96	07-On	5	32T- ID: 5.248"
NI	207707-200	NA	Overdrive	.078/1.98	07-On	4	36T- ID: 6.146"
NI	207709-200	NA	Brake #1	.077/1.96	07-On	5	36T- ID: 7.008"
NI	207711-180	NA	Brake #2	.071/1.80	07-On	4	36T- ID: 6.471"

TOYOTA
AB60E/F
2007-On

KITS

ILL	Description	Years	Friction Module	Steel Module	Overhaul Kit	Banner Kit	Master Kit
NI	Rebuilding Kit - with Molded Pistons	07-On	208752	208753	208800	208901LS	208901
NI	Rebuilding Kit - without Molded Pistons	07-On	208752	208753	208800X	208901XLS	208901X

FRICTION CLUTCHES

ILL	ALTO No.	REF No.	Description	Spec	Year	Qty	Notes
NI	208700-150	NA	C1 Clutch	.059/1.50	07-On	7	HEG - 36T - OD: 5.014"
NI	208702-152	NA	C2 Clutch	.060/1.52	07-On	5	HEG - 36T - OD: 7.056"
NI	208704-147	NA	C3 Clutch	.058/1.47	07-On	5	HEG - 40T - OD: 7.067"
NI	208706-147	NA	Coast Clutch	.059/1.50	07-On	4	HEG - 36T - OD: 4.807"
NI	208708-175	NA	B1 Clutch	.073/1.85	07-On	4	HEG - 40T - OD: 7.326"
NI	208710-152	NA	B2 Clutch	.060/1.52	07-On	4	HEG - 47T - OD: 6.460"
NI	208712-180	NA	B3 Clutch	.071/1.80	07-On	4	HEG - 46T - OD: 7.535"
NI	208714-157	NA	B4 Clutch	.062/1.57	07-On	7	HEG - 57T - OD: 6.313"

FRICTION CLUTCHES - HI-PERFORMANCE - RED EAGLE®

ILL	ALTO No.	REF No.	Description	Spec	Year	Qty	Notes
NI	208700A150	NA	C1 Clutch	.059/1.50	07-On	7	RED - 36T - OD: 5.014"
NI	208704A147	NA	C3 Clutch	.058/1.47	07-On	5	RED - 40T - OD: 7.066"
NI	208706A147	NA	Coast Clutch	.058/1.47	07-On	4	RED - 36T - OD: 4.806"

STEEL CLUTCHES

ILL	ALTO No.	REF No.	Description	Spec	Year	Qty	Notes
NI	208701-180	NA	C1 Clutch	.071/1.80	07-On	6	24T - ID: 4.493"
NI	208703-183	NA	C2 Clutch	.072/1.83	07-On	5	24T - ID: 6.515"
NI	208705-240	NA	C3 Clutch	.095/2.40	07-On	4	24T - ID: 6.309"
NI	208707-180	NA	Coast Clutch	.095/2.40	07-On	4	24T - ID: 4.278"
NI	208709-243	NA	B1 Clutch	.096/2.43	07-On	4	13T - ID: 6.561"
NI	208711-200	NA	B2 Clutch	.079/2.00	07-On	3	13T - ID: 5.711"
NI	208713-240	NA	B3 Clutch	.095/2.40	07-On	3	15T - ID: 6.162"
NI	208715-203	NA	B4 Clutch	.080/2.03	07-On	6	16T - ID: 5.711"

OEI® Original Equipment Improvements - HI-PERFORMANCE

ILL	ALTO No.	REF No.	Description	Spec	Year	Qty	Notes
NI	208755	NA	B3 Clutch PowerPack®		07-On	1	Red Eagle®

FILTERS

ILL	ALTO No.	REF No.	Description	Spec	Year	Qty	Notes
NI	208940	NA	Filter		07-On	1	

SEALING RINGS

ILL	ALTO No.	REF No.	Description	Spec	Year	Qty	Notes
NI	A40045TCU25	VW-O-3	Sealing Ring, Torque Converter- Teflon	Scarf Cut	07-On	25/pk	1.561 x 1.373 x .090"

PISTONS

ILL	ALTO No.	REF No.	Description	Spec	Year	Qty	Notes
KT	208670	NA	Piston Kit		07-On	1	3 pistons

TOYOTA
A55, A55F
1979-87

A>

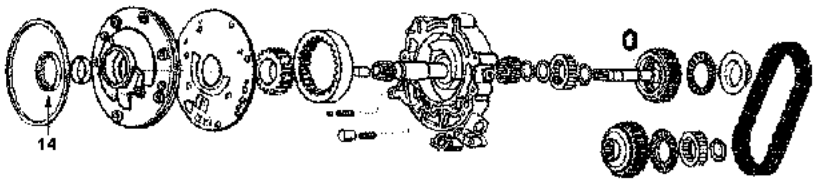

B>

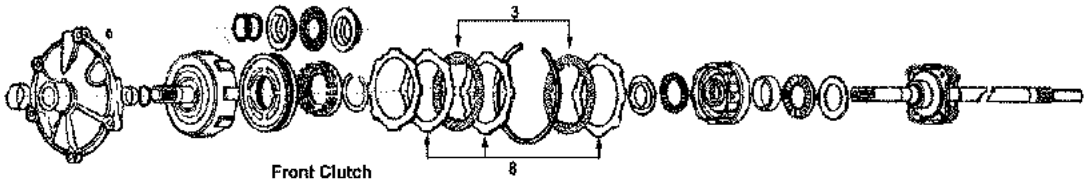

C>

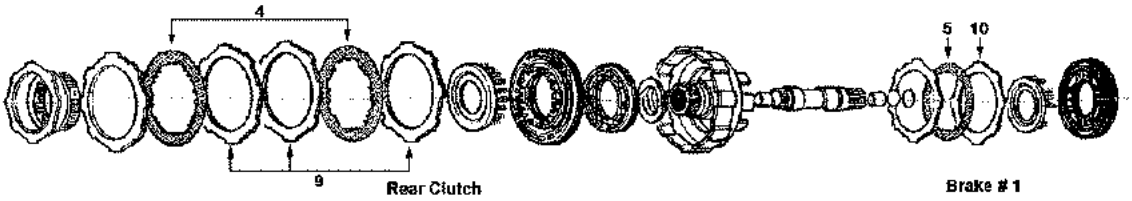

D>

E>

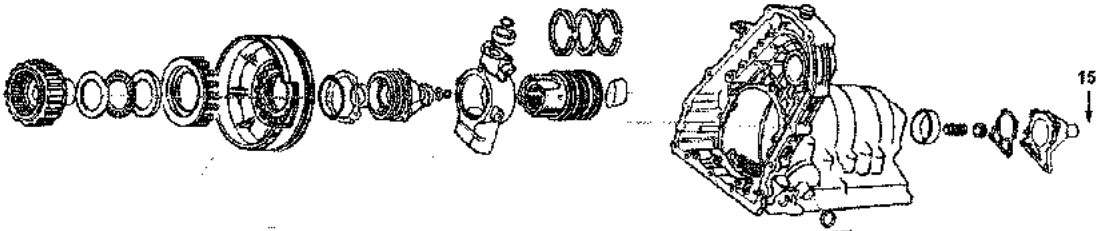

F>

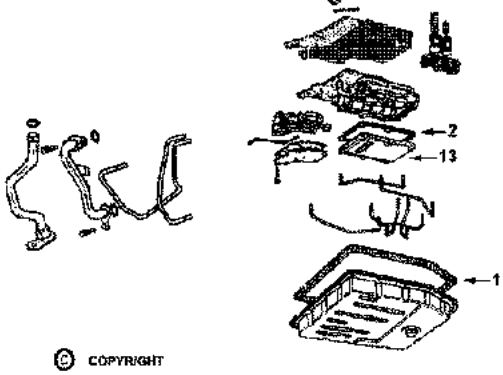

© COPYRIGHT
1999 AMERICAN DATA GRAPHICS, INC.

TOYOTA

A55, A55F

1979-87

KITS

*Add Suffix SK for Super Kit

ILL	Description	Years	Friction Module	Steel Module	Overhaul Kit	Banner Kit	Master Kit
KT	Rebuilding Kit - 2wd & 4wd	79-87	044752E	044753E	044804	044905LS	044905

MISCELLANEOUS GASKETS & KIT COMPONENTS

ILL	ALTO No.	REF No.	Description	Spec	Year	Qty	Notes
1F	044816A	35168-16010	Gasket, Oil Pan	Cork/Rub	79-87	1	
2F	044004E	35339-16010	Gasket, Filter		79-87	1	

FRICTION CLUTCHES

ILL	ALTO No.	REF No.	Description	Spec	Year	Qty	Notes
4C	044700A230	Various	Front, Rear, Brake #1, Brake #2	.091/2.3	79-87	AR	HEG - 24T - OD: 5.000" - SM
7D	044702A230	Various	Brake #3 - HEG replacement	.091/2.3	79-87	AR	HEG - 16T - OD: 5.000" - SM
3B	044700W230	Various	* Waved Friction - replaces 044700		79-87	AR	Wave

FRICTION CLUTCHES - HI-PERFORMANCE - Red Eagle®

ILL	ALTO No.	REF No.	Description	Spec	Year	Qty	Notes
AR	044740	NA	Front, Rear & Brake #2	.091/2.3	79-87	AR	Red - 24T - OD: 5.000" - SM
7D	044742	NA	Brake #3	.091/2.3	79-87	AR	Red - 16T - OD: 5.000" - SM

FRICTION CLUTCHES - HI-PERFORMANCE - UNIT PACKS (ONE Rebuild)

ILL	ALTO No.	REF No.	Description	Spec	Year	Qty	Notes
KT	044740UP4	NA	UNIT PACK - Front, Rear or Brake #2	.091/2.3	79-87	1	4 Red Eagle® Frictions
KT	044742UP5	NA	UNIT PACK - Brake #3	.091/2.3	79-87	1	5 Red Eagle® Frictions

STEEL CLUTCHES

ILL	ALTO No.	REF No.	Description	Spec	Year	Qty	Notes
8B	044701	Various	Front	.071/1.8	79-87	3-4	8T - ID: 4.012"
9C	044701	Various	Rear	.071/1.8	79-87	3	8T - ID: 4.012"
10C	044701	Various	Brake #1	.071/1.8	79-87	1	8T - ID: 4.012"
11D	044705	Various	Brake #2 (Center Support front)	.071/1.8	79-87	4	8T - ID: 4.012" (Long Tooth)
12D	044703	Various	Brake #3 (Center Support rear)	.071/1.8	79-87	5	15T - ID: 4.012"

STEEL CLUTCHES - HI-PERFORMANCE - Kolene®

ILL	ALTO No.	REF No.	Description	Spec	Year	Qty	Notes
AR	044701K180	NA	Front, Rear, & Brake #1	.071/1.8	79-87	AR	Kol -8T - ID: 4.012"
11D	044705K180	NA	Brake #2 (Center Support front)	.071/1.8	79-87	4	Kol -8T - ID: 4.012" (Long Tooth)
12D	044703K180	NA	Brake #3 (Center Support rear)	.071/1.8	79-87	5	Kol -15T - ID: 4.012"

STEEL CLUTCHES - HI-PERFORMANCE - UNIT PACKS (ONE Rebuild)

ILL	ALTO No.	REF No.	Description	Spec	Year	Qty	Notes
KT	044701KUP4	NA	UNIT PACK - Front, Rear or Brake #1	.071/1.8	79-87	1	4 Kolene® Steels
KT	044705KUP4	NA	UNIT PACK - Brake #2	.071/1.8	79-87	1	4 Kolene® Steels
KT	044703KUP4	NA	UNIT PACK - Brake #3	.071/1.8	79-87	1	4 Kolene® Steels

TOYOTA

A55, A55F

1979-87

FILTERS

ILL	ALTO No.	REF No.	Description	Spec	Year	Qty	Notes
13F	044938	35303-16010	Filter - 2wd		79-87	1	
13F	044938A	35303-16030	Filter - 4wd		82-87	1	

METAL CLAD SEALS

ILL	ALTO No.	REF No.	Description	Spec	Year	Qty	Notes
14A	044400	90311-38020	Front Pump		79-87	1	
15E	TBA	90311-32011	Extension Housing - 4wd		82-87	1	
N I	044425	90311-32006	Axle/Differential - Right & Left - 2wd		79-87	2	
N I	044402	90310-23001	Governor Pressure Adapter		79-87	2	
N I	036403	90311-08004	Throttle Valve		79-87	1	
N I	044420	90310-09001	Speedometer		79-87	1	
N I	TBA	90311-10082	Manual Lever		79-87	1	

SEALING RINGS

ILL	ALTO No.	REF No.	Description	Spec	Year	Qty	Notes
KT	044601A	D442	Sealing Ring Kit - 14M		79-87	1	

TOYOTA

A130, 131, 132 1984-On
MX1, MX17

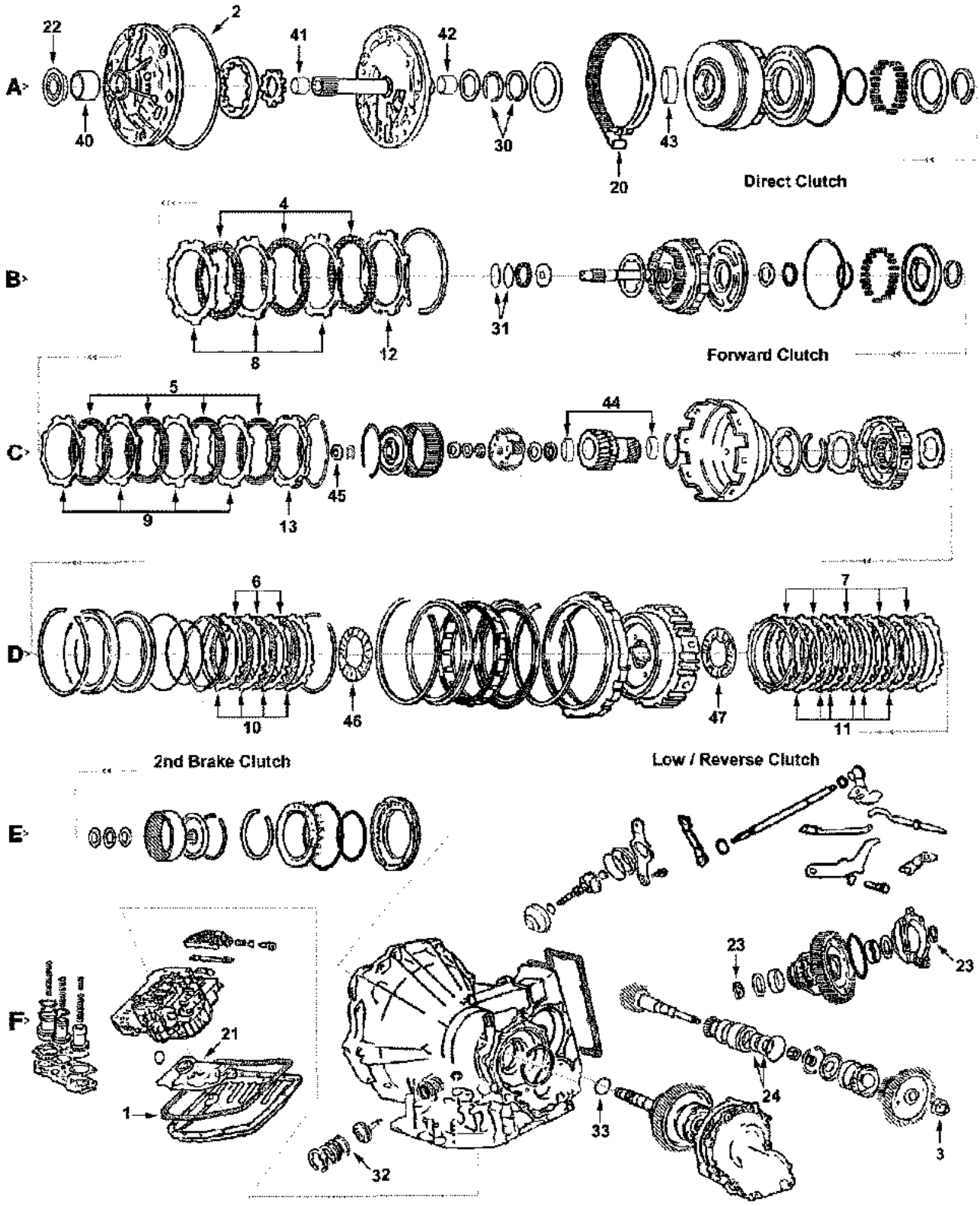

© COPYRIGHT
1999 AMERICAN DATA GRAPHICS, INC.

TOYOTA

A130, 131, 132 1984-On
MX1, MX17

KITS

*Add Suffix SK for Super Kit

ILL	Description	Years	Friction Module	Steel Module	Overhaul Kit	Banner Kit	Master Kit
KT	Rebuilding Kit - A130, A131L, A132L	84-94	065752B	065753B	065800	065905LS	065905
KT	Rebuilding Kit - A132L	95-On	065752N	065753N	065800	065905ALS	065905A
KT	Rebuilding Kit - MX17(Sprint, Firefly, Metro, Swift)	85-On	065752D	065753D	065808	065909LS	065909
KT	Rebuilding Kit - (Swift 1.3L, 1.5L, 1.6L)	01-On	065752D	065753T	065808A	065909ALS	065909A
KT	Rebuilding Kit - MX1 (Nova, Prizm)	85-94	065752B	065753B	065810	065911LS	065911

MISCELLANEOUS GASKETS & KIT COMPONENTS

ILL	ALTO No.	REF No.	Description	Spec	Year	Qty	Notes
1F	065816	35168-32010	Gasket, Oil Pan	Cork/Rub	83-On	1	
2A	044050	90301-99024	O Ring, Front Pump to case		83-On	1	
N I	044054	90301-09173	O Ring, Filler Tube & Detent Cable		83-On	2	
N I	010116B	96711-24018	O Ring, Speedometer		83-On	1	
3F	TBA	90179-20004	Nut, Pinion Shaft		83-On	1	

FRICTION CLUTCHES

ILL	ALTO No.	REF No.	Description	Spec	Year	Qty	Notes
4B	065700	Various	Direct	.067/1.7	83-86	3	HEG - 40T - OD: 4.971" - SM
4B	065710PL	Various	Direct	.075/1.95	87-On	3-4	HEG - 40T - OD: 4.971" - PL
5C	065700	Various	Forward	.067/1.7	83-86	4	HEG - 40T - OD: 4.971" - SM
5C	065700W	NA	Forward - wave	.067/1.7	87-On	AR	HEG - 40T - OD: 4.971" - SM
6D	065702	Various	2nd Brake (Coast)	.067/1.7	83-86	3	HEG - 33T - OD: 5.589" - SM
6D	065712	Various	2nd Brake (Coast) - some models	.075/1.95	87-On	3	Tan - 33T - OD: 5.589" - SM
7D	065702	Various	Low / Reverse (Brake #3) - Except Celica	.067/1.7	83-On	6	HEG - 33T - OD: 5.589" - SM
7D	065722	Various	Low / Reverse (Brake #3) - Celica only	.059/1.5	93-99	5	Tan - 33T - OD: 5.589" - SM

STEEL CLUTCHES

ILL	ALTO No.	REF No.	Description	Spec	Year	Qty	Notes
8B	065701	Various	Direct	.071/1.8	84-On	2-3	8T - ID: 4.138"
9C	065701	Various	Forward	.071/1.8	84-On	3	8T - ID: 4.138"
10D	065705	Various	2nd Brake (Coast)	.071/1.8	84-On	3-4	12T - ID: 4.580"
11D	065703	Various	Low / Reverse (Brake #3)	.071/1.8	84-On	5-7	12T - ID: 4.580"

PRESSURE PLATES

ILL	ALTO No.	REF No.	Description	Spec	Year	Qty	Notes
12B	065760-260	NA	Direct, Top - selective	.102/2.6	84-On	AR	
12B	065760-300	35675-32010	Direct, Top - selective	.118/3.0	84-On	AR	
12B	065760-320	35675-12010	Direct, Top - selective	.125/3.2	84-On	AR	
12B	065760-337	35675-32020	Direct, Top - selective	.133/3.37	84-On	AR	
12B	TBA	35675-32060	Direct, Top - selective	.157/4.0	84-On	AR	
13C	065760-260	NA	Forward, Top - selective	.102/2.6	84-On	AR	
13C	065760-280	35675-17010	Forward, Top - selective	.110/2.8	84-On	AR	
13C	065760-300	35675-32010	Forward, Top - selective	.118/3.0	84-On	AR	
13C	065760-320	35675-12010	Forward, Top - selective	.125/3.2	84-On	AR	
13C	065760-337	35675-32020	Forward, Top - selective	.133/3.37	84-On	AR	
13C	065760-360	35675-32060	Forward, Top - selective	.157/4.0	84-On	AR	

BANDS

ILL	ALTO No.	REF No.	Description	Spec	Year	Qty	Notes
20A	065950	35810-32020	2nd Coast Brake - except below	.983	84-On	1	
20A	065952	96054009	2nd Coast Brake - MX17	1.190	85-On	1	

TOYOTA

A130, 131, 132 1984-On
MX1, MX17

FILTERS

ILL	ALTO No.	REF No.	Description	Spec	Year	Qty	Notes
21F	065940	35330-20012	Filter		84-On	1	
21F	065944	96053975	Filter - MX17		89-On	1	

METAL CLAD SEALS

ILL	ALTO No.	REF No.	Description	Spec	Year	Qty	Notes
22A	044400	90311-38020	Front Pump		84-On	1	
23F	065426	90311-34022	Axle	2.140	84-On	2	1pc. 95-On (Conv. side)
23F	065428	90311-35010	Axle - A130L only	2.494	84-85	2	Corolla Diesel
23F	065430	90311-34023	Axle - case side		95-On	1	
24F	065427	90311-34003	Pinion		84-On	1	
N I	065410	90311-12002	Manual Lever		84-On	1	
N I	044420	90310-09001	Speedometer		84-On	1	

SEALING RINGS

ILL	ALTO No.	REF No.	Description	Spec	Year	Qty	Notes
KT	065600	D411	Sealing Ring Kit - 2M / 7T		84-On	1	combo - all Toyota FWD
KT	065601	NA	Sealing Ring Kit - 6T		84-On	1	A130 series only
30A	065100	35617-22011	Front Pump Stator - Direct drum		84-On	2	
31B	065101	35712-32010	Input Shaft		84-On	2	
32F	065102	35865-32010	2nd Coast Servo piston		84-On	1	
33F	065103	35748-32010	Intermediate Shaft		84-On	1	

BUSHINGS

ILL	ALTO No.	REF No.	Description	Spec	Year	Qty	Notes
KT	065625	NA	Bushing Kit		84-On	1	
40A	044200	NA	Front Pump Body		84-On	1	
41A	044202	NA	Stator Shaft (Front) - wide	21.5mm	84-On	1	
42A	065201	NA	Stator Shaft (Rear)		84-On	1	
43A	065202	35605-20010	Direct Drum		84-On	1	
44C	065203	NA	Sun Gear		84-On	2	
45C	065204	NA	Input Hub		84-On	1	

WASHERS

ILL	ALTO No.	REF No.	Description	Spec	Year	Qty	Notes
KT	065635	NA	Washer Kit		84-On	1	
46D	065151	35738-32010	Rear Planet - Front	Nylon	84-On	1	
47D	065152	35739-32011	Rear Planet - Rear	Nylon	84-On	1	

TOYOTA

A140, 141, 142
1983-On

A>

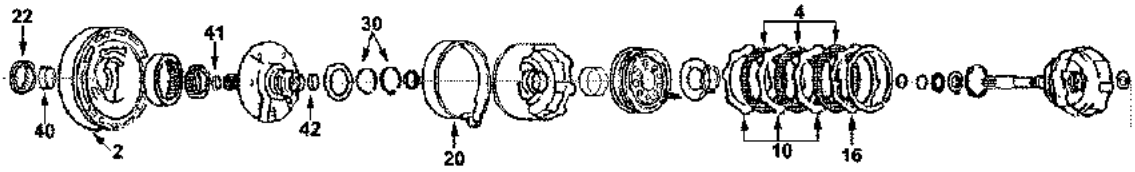

Direct Clutch

B>

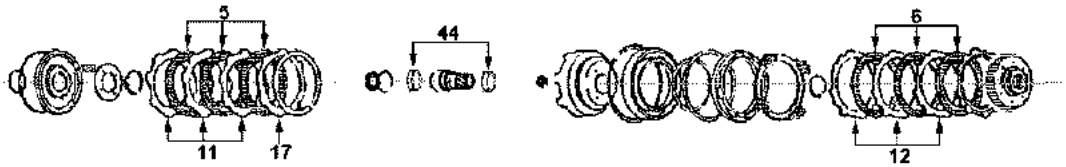

Forward Clutch

2nd Brake Clutch

C>

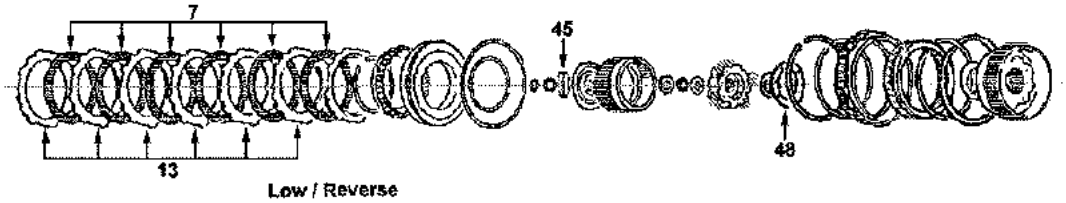

Low / Reverse

D>

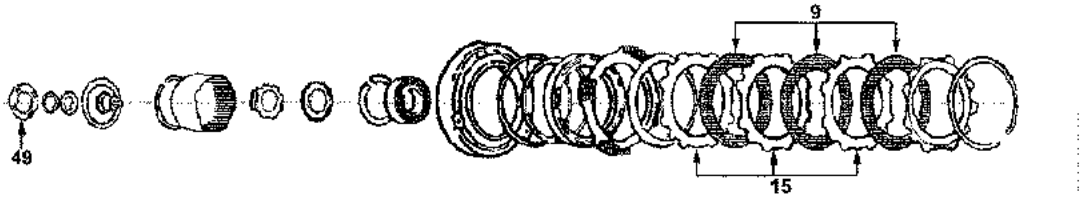

Overdrive Brake

E>

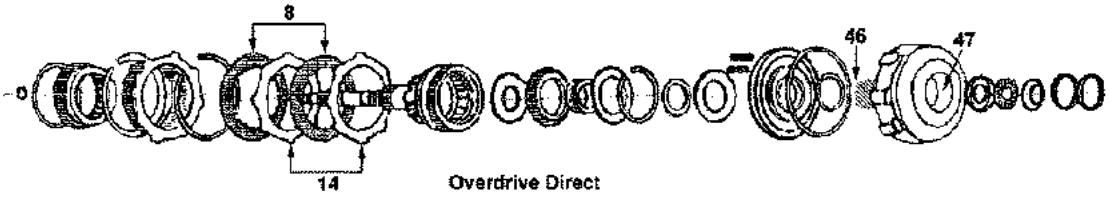

Overdrive Direct

F>

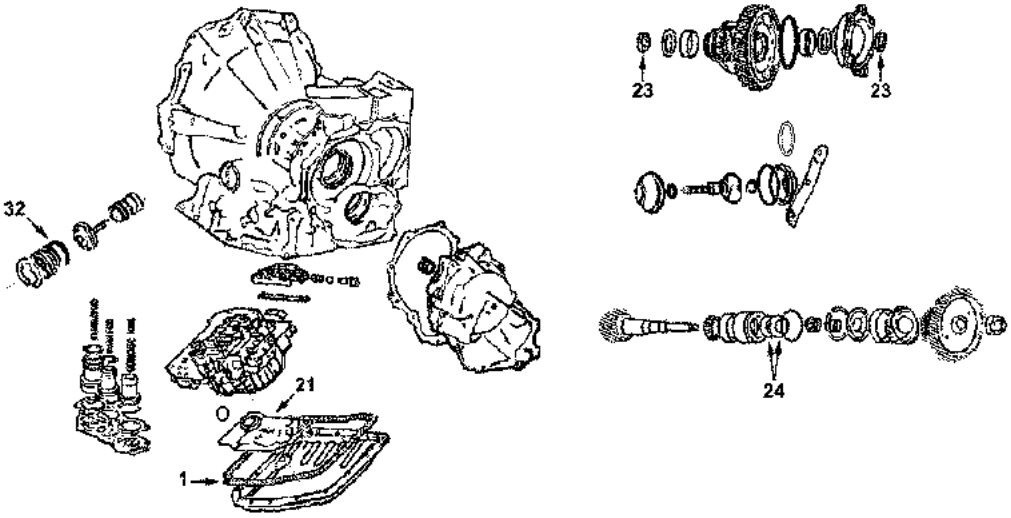

TOYOTA
A140, 141, 142
1983-On

KITS

*Add Suffix SK for Super Kit

ILL	Description	Years	Friction Module	Steel Module	Overhaul Kit	Banner Kit	Master Kit
KT	Rebuilding Kit - A140E/L, A141E, A142E/L	83-86	065752	065753	065802	065901LS	065901
KT	Rebuilding Kit - A140E/L, A142E	87-89	065752A	065753A	065802	065901ALS	065901A
KT	Rebuilding Kit - A140E, A142E	90-On	065752K	065753K	065802	065901BLS	065901B

MISCELLANEOUS GASKETS & KIT COMPONENTS

ILL	ALTO No.	REF No.	Description	Spec	Year	Qty	Notes
1F	065816	35168-32010	Gasket, Oil Pan	Cork/Rub	83-On	1	
2A	044050	90301-99024	O Ring, Front Pump to case		83-On	1	
N I	044054	90301-09173	O Ring, Filler Tube & Detent Cable		83-On	2	
N I	010116B	96711-24018	O Ring, Speedometer		83-On	1	
3F	TBA	90179-20004	Nut, Pinion Shaft		83-On	1	

FRICTION CLUTCHES

ILL	ALTO No.	REF No.	Description	Spec	Year	Qty	Notes
4A	065700	Various	Direct	.067/1.7	83-86	3	HEG - 40T - OD: 4.971" - SM
4A	065710PL	Various	Direct	.075/1.95	87-On	3-4	HEG - 40T - OD: 4.971" - PL
5B	065700	Various	Forward	.067/1.7	83-86	4	HEG - 40T - OD: 4.971" - SM
5B	065700W	NA	Forward - wave	.067/1.7	87-On	AR	HEG - 40T - OD: 4.971" - SM
6B	065702	Various	2nd Brake (Coast)	.067/1.7	83-86	3	HEG - 33T - OD: 5.589" - SM
6B	065712	Various	2nd Brake (Coast) - some models	.075/1.95	87-On	3	Tan - 33T - OD: 5.589" - SM
7C	065702	Various	Low / Reverse (Brake #3) - Except Celica	.067/1.7	83-On	6	HEG - 33T - OD: 5.589" - SM
7C	065722	Various	Low / Reverse (Brake #3) - Celica only	.059/1.5	93-99	5	Tan - 33T - OD: 5.589" - SM
8E	065700	Various	Overdrive Direct	.067/1.7	83-86	2	HEG - 40T - OD: 4.971" - SM
8E	065710	Various	Overdrive Direct	.075/1.95	87-On	2	HEG - 40T - OD: 4.971" - SM
9D	065702	Various	Overdrive Brake	.067/1.7	83-86	3	HEG - 33T - OD: 5.589" - SM
9D	065706	Various	Overdrive Brake	.075/1.95	87-On	3	Tan - 24T - OD: 6.483" - PL

STEEL CLUTCHES

ILL	ALTO No.	REF No.	Description	Spec	Year	Qty	Notes
10A	065701	Various	Direct	.071/1.8	83-On	3	8T - ID: 4.138"
11B	065701	Various	Forward	.071/1.8	83-On	4	8T - ID: 4.138"
12B	065705	Various	2nd Brake (Coast)	.071/1.8	83-On	3-4	12T - ID: 4.580"
13C	065703	Various	Low / Reverse (Brake #3)	.071/1.8	83-On	5-8	12T - ID: 4.580"
14E	065701	Various	Overdrive Direct	.071/1.8	83-86	2	8T - ID: 4.138"
14E	065709	Various	Overdrive Direct	.071/1.8	87-On	2-3	20T - ID: 4.128"
15D	065707	Various	Overdrive Brake	.071/1.8	83-89	3-4	12T - ID: 5.636"
15D	065717	Various	Overdrive Brake	.098/2.5	90-On	2	12T - ID: 5.636"

PRESSURE PLATES

ILL	ALTO No.	REF No.	Description	Spec	Year	Qty	Notes
16A	065760-260	35675-32030	Direct, Top - selective	.102/2.6	83-On	AR	
16A	065760-300	35675-32010	Direct, Top - selective	.118/3.0	83-On	AR	
16A	065760-320	35675-12010	Direct, Top - selective	.125/3.2	83-On	AR	
16A	065760-337	35675-32020	Direct, Top - selective	.133/3.37	83-On	AR	
16A	TBA	35675-32060	Direct, Top - selective	.157/4.0	83-On	AR	
17B	065760-280	35675-17010	Forward, Top - selective	.110/2.8	83-On	AR	
17B	065760-300	35675-32010	Forward, Top - selective	.118/3.0	83-On	AR	
17B	065760-320	35675-12010	Forward, Top - selective	.125/3.2	83-On	AR	
17B	065760-337	35675-32020	Forward, Top - selective	.133/3.37	83-On	AR	
17B	065760-360	35635-50030	Forward, Top - selective	.142/3.6	83-On	AR	

TOYOTA
A140, 141, 142
1983-On

BANDS

ILL	ALTO No.	REF No.	Description	Spec	Year	Qty	Notes
20A	065950	35810-32020	2nd Coast Brake	Tan	83-On	1	

FILTERS

ILL	ALTO No.	REF No.	Description	Spec	Year	Qty	Notes
21F	065940	35330-20012	Filter		84-89	1	
21F	065940A	35330-33022	Filter		90-On	1	

METAL CLAD SEALS

ILL	ALTO No.	REF No.	Description	Spec	Year	Qty	Notes
22A	044400	90311-38020	Front Pump		83-On	1	
23F	065428	90311-35019	Axle - except MR2	2.494	83-On	2	
23F	065426	90311-34007	Axle - MR2 only		1986	2	
24F	065427	NA	Pinion		83-On	2	
N I	065410	90311-12002	Manual Lever		83-On	1	
N I	044420	90310-09001	Speedometer		83-On	1	

SEALING RINGS

ILL	ALTO No.	REF No.	Description	Spec	Year	Qty	Notes
KT	065600	D411	Sealing Ring Kit - 2M / 7T (Combo)		83-On	1	All Toyota FWD exc. A540
30A	065100	35617-22011	Front Pump Stator - Direct drum		83-On	2	
34E	044101A	35617-16010	Overdrive Support	Metal	83-On	2	
31B	065101	35712-32010	Input Shaft		83-On	2	
32F	065102	35865-32010	2nd Coast Servo piston		83-On	1	
33F	065103	35748-32010	Intermediate Shaft		83-On	1	

BUSHINGS

ILL	ALTO No.	REF No.	Description	Spec	Year	Qty	Notes
KT	065625	NA	Bushing Kit		83-On	1	
40A	044200	NA	Front Pump Body		83-On	1	
41A	044202	NA	Stator Shaft (Front) - wide	21.5mm	83-On	1	
42A	065201	NA	Stator Shaft (Rear)		83-On	1	
43A	065202	35605-20010	Direct Drum		83-On	1	
44B	065203	NA	Sun Gear		83-On	2	
45C	065204	NA	Input Hub		83-On	1	
46E	065205	NA	Overdrive Sun Gear - Front		83-On	1	
47E	065206	NA	Overdrive Sun Gear - Rear		83-On	1	

WASHERS

ILL	ALTO No.	REF No.	Description	Spec	Year	Qty	Notes
KT	065635	NA	Washer Kit		84-On	1	
48C	065151	35738-32010	Rear Planet - Front	Nylon	84-On	1	
49D	065152	35739-32011	Rear Planet - Rear	Nylon	84-On	1	

TOYOTA
A240 SERIES
1984-On

A>

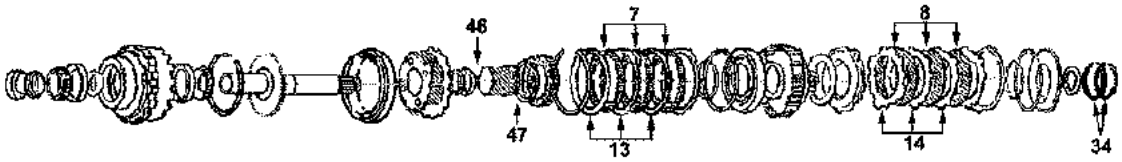

Underdrive Direct

Underdrive Brake

B>

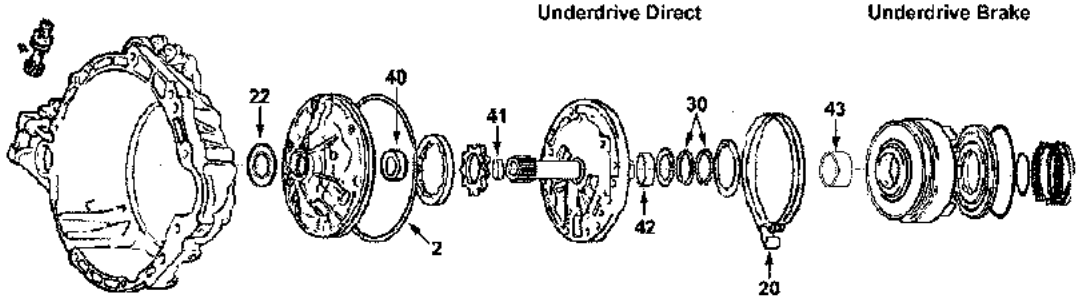

C>

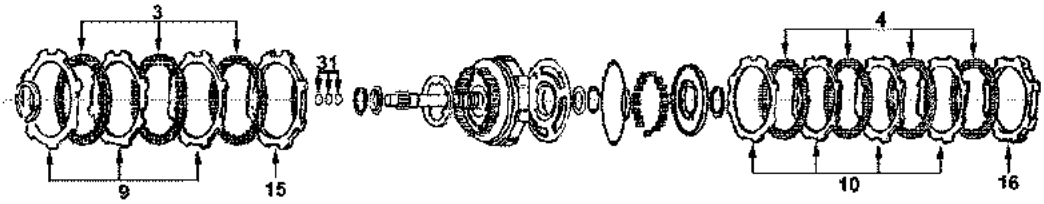

Direct Clutch

Forward Clutch

D>

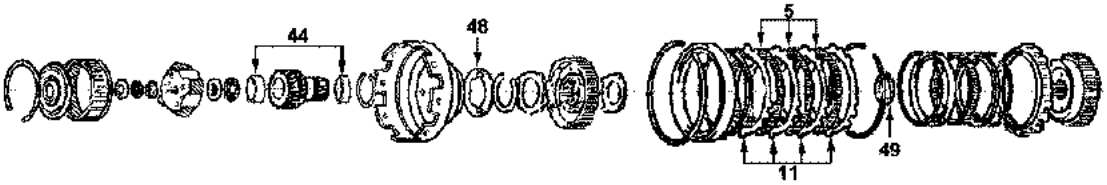

2nd Brake Clutch

E>

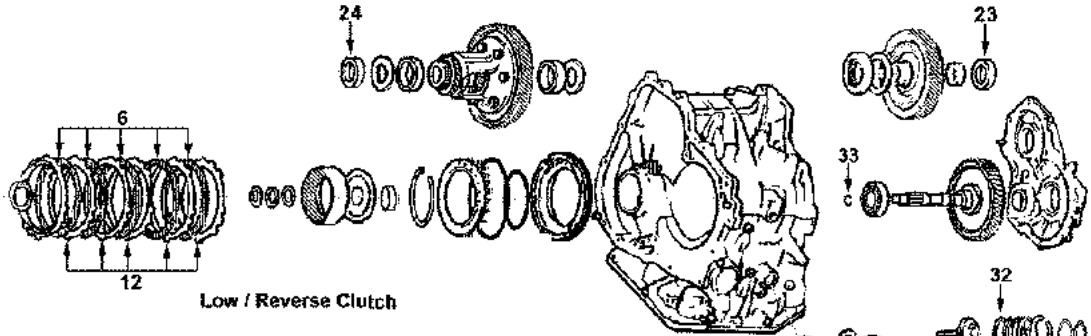

Low / Reverse Clutch

F>

TOYOTA
A240 SERIES
1984-On

KITS

*Add Suffix SK for Super Kit

ILL	Description	Years	Friction Module	Steel Module	Overhaul Kit	Banner Kit	Master Kit
KT	Rebuilding Kit - CELICA A243L (1.6L engine)	90-93	065752C	065753C	065804	065907LS	065907
KT	Rebuilding Kit - CELICA A241E (2.2L engine)	90-93	065752H	065753H	065804	065907ALS	065907A
KT	Rebuilding Kit - CELICA A246E	94-97	065752J	065753J	065804A	065907BLS	065907B
KT	Rebuilding Kit - COROLLA A240L	84-88	TBA	065753C	065804	TBA	TBA
KT	Rebuilding Kit - COROLLA A240L (2wd)	88-92	065752C	065753C	065804	065907LS	065907
KT	Rebuilding Kit - COROLLA A241H (AWD)	88-92	065752C	065753C	065804*	065907LS	065907
KT	Rebuilding Kit - COROLLA A245E (1.8L engine)	93-On	065752J	065753J	065804A	065907BLS	065907B
KT	Rebuilding Kit - COROLLA A245E	96-On	065752S	065753J	065804	065907ELS	065907E
KT	Rebuilding Kit - MR2 A240L	87-89	065752H	065753H	065804	065907ALS	065907A
KT	Rebuilding Kit - M42 A241E	90-93	065752L	065753L	065804	065907CLS	065907C
KT	Rebuilding Kit - MR2 A241E	94-95	065752T	065753L	065804	065907FLS	065907F
KT	Rebuilding Kit - PASEO A244E	92-On	065752H	065753H	065804	065907ALS	065907A
KT	Rebuilding Kit - RAV4 A241E 2WD	96-97	065752V	065753C	065804	065907GLS	065907G
KT	Rebuilding Kit - RAV4 A247E 2WD	98-00	065752W	065753J	065804	065907HLS	065907H
KT	Rebuilding Kit - TERCEL A242L	95-On	065752M	065753M	065804	065907DLS	065907D
	* Right Axle seal must be ordered separately for this application						

MISCELLANEOUS GASKETS & KIT COMPONENTS

ILL	ALTO No.	REF No.	Description	Spec	Year	Qty	Notes
1F	065816A	35168-12020	Gasket, Oil Pan - A240, 241, 242, 244	Cork/Rub	84-On	1	
1F	065816B	35168-12030	Gasket, Oil Pan - A245, 246, 247	Cork/Rub	93-On	1	
2B	044050	90301-99024	O Ring, Front Pump to case		84-On	1	
N I	044054	90301-09173	O Ring, Filler Tube & Detent Cable		84-On	2	
N I	010116B	96711-24018	O Ring, Speedometer		84-On	1	
N I	TBA	90179-20004	Nut, Pinion Shaft		84-On	1	

FRICTION CLUTCHES

ILL	ALTO No.	REF No.	Description	Spec	Year	Qty	Notes
3C	065700	Various	Direct - A240, 241, 242, 244	.067/1.7	84-On	2	HEG - 40T - OD: 4.971" - SM
3C	065710	Various	Direct - A241, 245, 246, 247	.075/1.95	93-On	2-3	HEG - 40T - OD: 4.971" - SM
3C	065710PL	Various	Direct - A240, 241, 243	.075/1.95	86-95	3	HEG - 40T - OD: 4.971" - PL
4C	065700	Various	Forward - All	.067/1.7	84-On	3-4	HEG - 40T - OD: 4.971" - SM
3C	065700W	NA	Forward & Direct - wave	.067/1.7	84-On	opt.	HEG - 40T - OD: 4.971" - SM
5D	065702	Various	2nd Brake - Corolla & Celica	.067/1.7	84-On	3	HEG - 33T - OD: 5.589" - SM
5D	065712	Various	2nd Brake - all others	.075/1.95	86-On	2-3	HEG - 33T - OD: 5.589" - SM
6E	065702	Various	Low / Reverse - wide paper	.067/1.7	84-95	5-6	HEG - 33T - OD: 5.589" - SM
6E	065702A	Various	Low / Reverse - narrow paper	.067/1.7	93-On	5-6	HEG - 33T - OD: 5.589" - SM
7A	067702	Various	Underdrive #1 (Direct)	.075/1.95	84-On	3-4	HEG - 34T - OD: 4.254" - SM
8A	067704	Various	Underdrive #2 (Brake) - wide paper	.067/1.7	84-On	3	HEG - 26T - OD: 4.254" - SM
8A	067704A	Various	Underdrive #2 (Brake) - narrow paper	.067/1.7	93-On	3	HEG - 26T - OD: 4.254" - SM
N I	067702	Various	Differential (4wd - A241H)	.075/1.95	88-92	7	HEG - 34T - OD: 4.254" - SM

STEEL CLUTCHES

ILL	ALTO No.	REF No.	Description	Spec	Year	Qty	Notes
9C	065701	Various	Direct	.071/1.8	84-On	3	8T - ID: 4.138"
10C	065701	Various	Forward	.071/1.8	84-On	3-4	8T - ID: 4.138"
11D	065705	Various	2nd Brake	.071/1.8	84-On	3-4	12T - ID:4.578" (short tooth)
12E	065703	Various	Low / Reverse - A240, 241, 242, 244	.071/1.8	84-On	4-6	12T - ID:4.578" (long tooth)
12E	065703A	Various	Low / Reverse - A245, 246, 247	.071/1.8	93-On	6	12T - ID:4.923" (long tooth)
13A	067703	Various	Underdrive #1 (Direct)	.071/1.8	84-On	3-4	20T - ID: 3.568"

TOYOTA
A240 SERIES
1984-On

STEEL CLUTCHES

ILL	ALTO No.	REF No.	Description	Spec	Year	Qty	Notes
14A	067705	Various	Underdrive #2 (Brake)	.071/1.8	84-On	3	8T - ID: 3.155"
14A	067705A	Various	Underdrive #2 (Brake)	.071/1.8	93-On	3	8T - ID: 3.429"
N I	067703	Various	Differential (4wd - A241H)	.071/1.8	88-92	8	20T - ID: 3.568"

PRESSURE PLATES

ILL	ALTO No.	REF No.	Description	Spec	Year	Qty	Notes
15C	065760-260	35675-32030	Direct, Top - selective	.102/2.6	84-On	AR	
15C	065760-300	35675-32010	Direct, Top - selective	.118/3.0	84-On	AR	
15C	065760-320	35675-12010	Direct, Top - selective	.125/3.2	84-On	AR	
15C	065760-337	35675-32020	Direct, Top - selective	.133/3.37	84-On	AR	
15C	TBA	35675-32060	Direct, Top - selective	.157/4.0	84-On	AR	
16C	065760-280	35675-17010	Forward, Top - selective	.110/2.8	84-On	AR	
16C	065760-300	35675-32010	Forward, Top - selective	.118/3.0	84-On	AR	
16C	065760-320	35675-12010	Forward, Top - selective	.125/3.2	84-On	AR	
16C	065760-337	35675-32020	Forward, Top - selective	.133/3.37	84-On	AR	
16C	065760-360	35635-50030	Forward, Top - selective	.142/3.6	84-On	AR	

BANDS

ILL	ALTO No.	REF No.	Description	Spec	Year	Qty	Notes
20B	065950	35810-32020	2nd Coast Brake	Tan	84-On	1	

FILTERS

ILL	ALTO No.	REF No.	Description	Spec	Year	Qty	Notes
21F	065942	35330-12020	Filter - A240, 241, 242, 243, 244		84-On	1	
21F	065942A	35330-12030	Filter - A245, 246, 247		93-On	1	
21F	144940A	35330-12040	Filter - A245E, 245L, 246		03-On	1	

METAL CLAD SEALS

ILL	ALTO No.	REF No.	Description	Spec	Year	Qty	Notes
22B	044400	90311-38020	Front Pump		84-On	1	
23E	065429	90311-34013	Left Axle - A240, 242, 244, 245	2.494	84-On	1	Small ID
23E	065429A	90311-35020	Left Axle - A241E/H, 243, 246, 247	2.494	84-On	1	Large ID
24E	065426	90311-34012	Right Axle - A240, 244, 245, 246	2.140	84-On	1	
24E	065428	90311-35019	Right Axle - A241E, 243, 247	2.175	84-On	1	
24E	065430	90311-44004	Right Axle - A241H (AWD)	3.165	84-On	1	
N I	065410	90311-12002	Manual Lever		84-On	1	
N I	044420	90310-09001	Speedometer		84-On	1	

SEALING RINGS

ILL	ALTO No.	REF No.	Description	Spec	Year	Qty	Notes
KT	065600	D411	Sealing Ring Kit - 2M / 7T (Combo)		84-On	1	All Toyota FWD exc. A540
30B	065100	35617-22011	Front Pump Stator - Direct drum		84-On	2	
34A	044101A	35617-16010	Overdrive Support	Metal	84-On	2	
31C	065101	35712-32010	Input Shaft		84-On	2	
32F	065102	35865-32010	2nd Coast Servo piston		84-On	1	
33E	065103	35748-32010	Intermediate Shaft		84-On	1	

BUSHINGS

ILL	ALTO No.	REF No.	Description	Spec	Year	Qty	Notes
KT	065625	NA	Bushing Kit		84-On	1	

TOYOTA
A240 SERIES
1984-On

BUSHINGS

ILL	ALTO No.	REF No.	Description	Spec	Year	Qty	Notes
40B	044200	NA	Front Pump Body		84-On	1	
41B	044202	NA	Stator Shaft (Front) - wide	21.5mm	84-On	1	
42B	065201	NA	Stator Shaft (Rear)		84-On	1	
43B	065202	35605-20010	Direct Drum		84-On	1	
44D	065203	NA	Sun Gear		84-On	2	
N I	065204	NA	Input Hub		84-On	1	
46A	065205	NA	Overdrive Sun Gear - Front		84-On	1	
47A	065206	NA	Overdrive Sun Gear - Rear		84-On	1	

WASHERS

ILL	ALTO No.	REF No.	Description	Spec	Year	Qty	Notes
KT	065635	NA	Washer Kit		84-On	1	
48D	065151	35738-32010	Rear Planet - Front	Nylon	84-On	1	
49D	065152	35739-32011	Rear Planet - Rear	Nylon	84-On	1	

TOYOTA
A540E/H, A541E
1988-On

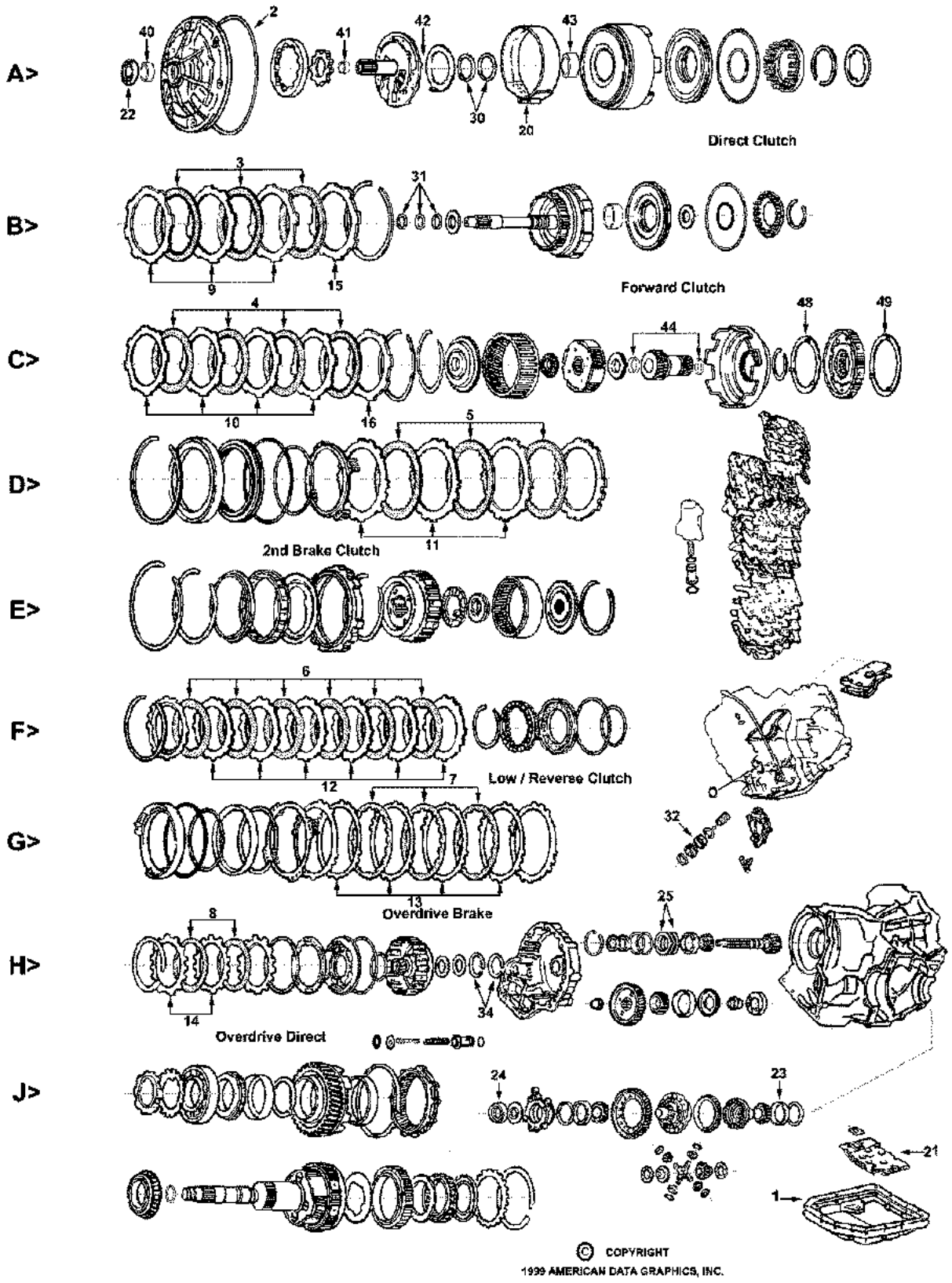

TOYOTA
A540E/H, A541E
1988-On

KITS

*Add Suffix SK for Super Kit

ILL	Description	Years	Friction Module	Steel Module	Overhaul Kit	Banner Kit	Master Kit
KT	Rebuilding Kit - AVALON A541E	95-97	065752P	065753P	065806B	065903DLS	065903D
KT	Rebuilding Kit - AVALON A541E	98-7/99	065752P	065753R	065806B	065903DLS	065903E
KT	Rebuilding Kit - AVALON A541E	8/99-On	065752R	065753S	065806B	065903FLS	065903F
KT	Rebuilding Kit - CAMRY A540E (V6)	88-91	065752E	065753E	065806	065903LS	065903
KT	Rebuilding Kit - CAMRY A540H (V6 with AWD)	89-91	065752Q	065753Q	065806C	065903CLS	065903C
KT	Rebuilding Kit - CAMRY A540E (V6)	92-93	065752F	065753F	065806	065903ALS	065903A
KT	Rebuilding Kit - CAMRY A540E (V6)	94-97	065752P	065753P	065806B	065903DLS	065903D
KT	Rebuilding Kit - CAMRY A541E (V6)	98-01	065752P	065753R	065806B	065903DLS	065903E
KT	Rebuilding Kit - RAV4 A540H AWD	96-00	065752Q	065753Q	065806C	065903CLS	065903C
KT	Rebuilding Kit - SIENNA A540E	98-00	065752G	065753G	065806A	065903BLS	065903B
KT	Rebuilding Kit - SIENNA A541E	01-On	065752P	065753R	065806B	065903DLS	065903E
KT	Rebuilding Kit - SOLARA A541E	99-01	065752P	065753R	065806B	065903DLS	065903E
KT	Rebuilding Kit - LEXUS ES250 A540E	89-91	065752E	065753E	065806	065903LS	065903
KT	Rebuilding Kit - LEXUS ES300 A540E	92-93	065752G	065753G	065806A	065903BLS	065903B
KT	Rebuilding Kit - LEXUS ES300 A541E	94-97	065752P	065753P	065806B	065903DLS	065903D
KT	Rebuilding Kit - LEXUS ES300 A541E	98-On	065752P	065753R	065806B	065903DLS	065903E

MISCELLANEOUS GASKETS & KIT COMPONENTS

ILL	ALTO No.	REF No.	Description	Spec	Year	Qty	Notes
1F	065818	35168-33020	Gasket, Oil Pan	Cork/Rub	88-On	1	
1F	065816D	35168-33030	Gasket, Oil Pan	Cork/Rub	94-97	1	
2B	065050	90301-99079	O Ring, Front Pump to case		88-On	1	
N I	044054	90301-09173	O Ring, Filler Tube & Detent Cable		88-On	2	
N I	010116B	96711-24018	O Ring, Speedometer		88-On	1	
N I	TBA	90179-24006	Nut, Pinion Shaft		88-On	1	

FRICTION CLUTCHES

ILL	ALTO No.	REF No.	Description	Spec	Year	Qty	Notes
3B	065700	Various	Direct - A540H	.067/1.7	89-00	3	HEG - 40T - OD: 4.971" - SM
3B	065700W	NA	Forward & Direct - wave	.067/1.7	89-00	opt.	HEG - 40T - OD: 4.971" - SM
3B	073704PL	Various	Direct - A540E (replaces 40T design)	.080/2.05	88-00	3	HEG - 32T - OD: 5.171" - PL
3B	073702	35633-41010	Direct - A541E	.083/2.1	94-On	3	HEG - 40T - OD: 5.177" - PLNI
4C	065700	Various	Forward - A540E/H	.067/1.7	88-00	4	HEG - 40T - OD: 4.971" - SM
4C	065700-150	Various	Forward - A541E	.059/1.7	94-On	5	HEG - 40T - OD: 4.971" - SM
5D	065712	Various	2nd Brake - A540E (88-91), A541E (94-On)	.075/1.95	88-On	3	Tan - 33T - OD: 5.589" - PL
5D	065712SM	Various	2nd Brake - A540E	.075/1.95	92-00	3	Tan - 33T - OD: 5.589" - SM
5D	065712A	Various	2nd Brake - A540H	.075/1.95	89-On	3-4	Tan - 36T - OD: 5.830" - PL
6F	065722	Various	Low / Reverse - A540E, A540H	.059/1.5	88-00	6-7	Tan - 33T - OD: 5.589" - SM
6F	065722A	Various	Low / Reverse - A541E	.059/1.5	94-On	6	Tan - 36T - OD: 5.830" - PL
7G	065706A	Various	Overdrive Brake - A540E (88-91), 540H	.081/2.05	88-00	3	Tan - 24T - OD: 6.483" - PL
7G	065706SM205	Various	Overdrive Brake - A540E	.081/2.05	92-00	3	Tan - 24T - OD: 6.483" - SM
7G	065706	Various	Overdrive Brake - A541E	.075/1.9	94-On	3	Tan - 24T - OD: 6.483" - PL
8H	065710	Various	Overdrive Direct	.075/1.95	88-On	2	HEG - 40T - OD: 4.971" - SM
N I	065718	Various	Differential - A540H	.071/1.8	89-00	11	Tan - 36T - OD: 4.508" - SM

STEEL CLUTCHES

ILL	ALTO No.	REF No.	Description	Spec	Year	Qty	Notes
9B	065701	Various	Direct - A540H	.071/1.8	89-On	3	8T - ID: 4.138"
9B	073703	Various	Direct - A540E	.091/2.3	88-On	2	6T - ID: 4.152"
9B	073703A	Various	Direct - A540E	.071/1.8	88-On	1	6T - ID: 4.152"

TOYOTA
A540E/H, A541E
1988-On

STEEL CLUTCHES

ILL	ALTO No.	REF No.	Description	Spec	Year	Qty	Notes
9B	073703A200	35647-33010	Direct - A541E	.078/2.0	94-On	2-3	6T - ID: 4.152"
9B	073703A140	35634-33030	Direct - A541E	.055/1.4	94-On	1	6T - ID: 4.152"
10C	065701	Various	Forward - A540E (88-92), A540H (96-00)	.071/1.8	88-00	4	8T - ID: 4.138"
10C	065701-160	35634-33010	Forward - A540E	.063/1.6	92-00	4	8T - ID: 4.138"
10C	065701-140	Various	Forward - A540E	.055/1.4	92-00	1	8T - ID: 4.138"
10C	073701	Various	Forward - A541E	.078/2.0	94-On	5	8T - ID: 4.138"
11D	065715	Various	2nd Brake - A540E	.071/1.8	88-00	3	12T - ID: 4.580"(Long tooth)
11D	065705	Various	2nd Brake - A540H	.071/1.8	89-00	3	12T - ID: 4.580"(Short tooth)
11D	065723	Various	2nd Brake - A541E	.071/1.8	94-On	3	10T - ID: 4.864"
12F	065703	Various	Low / Reverse - A540E, A540H	.071/1.8	88-00	6-7	12T - ID: 4.580"
12F	065713	Various	Low / Reverse - A541E	.063/1.6	94-On	6	10T - ID: 4.864"
13G	065717	Various	Overdrive Brake	.098/2.5	88-On	3-4	12T - ID: 5.636"
14H	065709	Various	Overdrive Direct - A540E	.071/1.8	88	2	20T - ID: 4.128"
14H	073709A	Various	Overdrive Direct - A540E, A540H	.118/3.0	89-00	2	23T - ID: 4.128"
14H	073709-180	Various	Overdrive Direct - A541E	.078/2.0	94-On	1	24T - ID: 4.128"
N I	065719	41474-32011	Differential - A540H	.063/1.6	89-00	11	30T - ID: 3.561"

PRESSURE PLATES

ILL	ALTO No.	REF No.	Description	Spec	Year	Qty	Notes
15B	065760-260	35675-32030	Direct, Top - selective	.102/2.6	88-On	AR	
15B	065760-300	35675-32010	Direct, Top - selective	.118/3.0	88-On	AR	
15B	065760-320	35675-12010	Direct, Top - selective	.125/3.2	88-On	AR	
15B	065760-337	35675-32020	Direct, Top - selective	.133/3.37	88-On	AR	
15B	TBA	35675-32060	Direct, Top - selective	.157/4.0	88-On	AR	
16C	065760-280	35675-17010	Forward, Top - selective	.110/2.8	88-On	AR	
16C	065760-300	35675-32010	Forward, Top - selective	.118/3.0	88-On	AR	
16C	065760-320	35675-12010	Forward, Top - selective	.125/3.2	88-On	AR	
16C	065760-337	35675-32020	Forward, Top - selective	.133/3.37	88-On	AR	
16C	065760-360	35635-50030	Forward, Top - selective	.142/3.6	88-On	AR	

BANDS

ILL	ALTO No.	REF No.	Description	Spec	Year	Qty	Notes
20A	065951	35810-33010	2nd Coast Brake	Tan	88-On	1	

FILTERS

ILL	ALTO No.	REF No.	Description	Spec	Year	Qty	Notes
21F	065946	35330-33030	Filter		88-On	1	
21F	065946A	35330-30010	Filter - V6 Avalon, Camry		94-On	1	

METAL CLAD SEALS

ILL	ALTO No.	REF No.	Description	Spec	Year	Qty	Notes
22A	044400	90311-38020	Front Pump		88-On	1	
23J	065424	90311-50011	Left Axle - All		88-On	1	
24J	065423	90311-40010	Right Axle - A540E, A541E		88-00	1	
24J	065430	90311-44004	Right Axle - A540H		89-00	1	
25H	065431	NA	Pinion		88-On	2	Retros for all
N I	065410	90311-12002	Manual Lever		88-On	1	
N I	044420	90310-09001	Speedometer		88-On	1	

TOYOTA
A540E/H, A541E
1988-On

SEALING RINGS

ILL	ALTO No.	REF No.	Description	Spec	Year	Qty	Notes
KT	065602	D411C	Sealing Ring Kit, A540E/A540H - 2M / 7T		88-On	1	
KT	065602A	NA	Sealing Ring Kit, A541E - 2M / 7T		94-On	1	
30A	065100	35617-22011	Front Pump Stator - Direct drum		88-On	2	
34H	044101A	35617-16010	Overdrive Support	Metal	88-On	2	
31B	065101	35712-32010	Input Shaft		88-On	2-3	
32G	065104	35865-32020	2nd Coast Servo piston - A540E, A540H	2.106	88-On	1	
32G	065105	35865-33010	2nd Coast Servo piston - A541E		94-On	1	
33E	065103	35748-32010	Intermediate Shaft		88-On	1	

BUSHINGS

ILL	ALTO No.	REF No.	Description	Spec	Year	Qty	Notes
KT	065625A	NA	Bushing Kit		88-On	1	
40A	044200	NA	Front Pump Body		88-On	1	
41A	044202	NA	Stator Shaft (Front) - wide	21.5mm	88-On	1	
42A	065201A	NA	Stator Shaft (Rear) - bearing design		88-On	1	
43A	065212	NA	Direct Drum		88-On	1	
44C	065213	NA	Sun Gear		88-On	2	
N I	065214	NA	Input Hub		88-On	1	
N I	065205	NA	Overdrive Sun Gear - Front		88-On	1	
N I	065206	NA	Overdrive Sun Gear - Rear		88-On	1	

WASHERS

ILL	ALTO No.	REF No.	Description	Spec	Year	Qty	Notes
KT	065635A	NA	Washer Kit		84-On	1	
48C	065151	35738-32010	Rear Planet - Front	Nylon	84-On	1	
49C	065152	35739-32011	Rear Planet - Rear	Nylon	84-On	1	

TOYOTA
U140E/F
1998-On

KITS

*Add Suffix SK for Super Kit

ILL	Description	Years	Friction Module	Steel Module	Overhaul Kit	Banner Kit	Master Kit
KT	Rebuilding Kit	98-On	136752	136753	136800	136901LS	136901
KT	Rebuilding Kit - without Molded Pistons	98-On	136752	136753	136800X	136901XLS	136901X

MISCELLANEOUS GASKETS & KIT COMPONENTS

ILL	ALTO No.	REF No.	Description	Spec	Year	Qty	Notes
N I	136816	35168-21010	Gasket, Oil Pan	Cork/Rub	98-On	1	
N I	136050	90301-99099	O Ring, Front Pump to case		98-On	1	
N I	044054	90301-09173	O Ring, Filler Tube & Detent Cable		98-On	2	
N I	010116B	96711-18018	O Ring, Speedometer		98-On	1	

FRICTION CLUTCHES

ILL	ALTO No.	REF No.	Description	Spec	Year	Qty	Notes
N I	136700-180	35633-21010	Forward	.071/1.8	98-On	6	HEG - 40T - OD: 5.387" - SM
N I	136702-180	35667-21010	Direct	.071/1.8	98-On	4	HEG - 40T - OD: 6.180" - PL
N I	136704-180	35681-21010	2nd Brake	.071/1.8	98-On	3-4	HEG - 40T - OD: 6.700" - PL
N I	136706-180	35682-21010	1st / Reverse	.071/1.8	98-On	5.7	HEG - 40T - OD: 6.400" - SB
N I	136708-180	34261-21010	Underdrive Brake (#1)	.071/1.8	98-On	3-4	HEG - 40T - OD: 4.918" - PL
N I	136710-180	34262-21010	Underdrive Brake (#2)	.071/1.8	98-On	3-4	HEG - 28T - OD: 4.635" - PL

STEEL CLUTCHES

ILL	ALTO No.	REF No.	Description	Spec	Year	Qty	Notes
N I	136701-180	35634-21010	Forward	.071/1.8	98-On	6	40T - ID: 4.500"
N I	136703-300	35647-21010	Direct	.118/3.0	98-On	4	40T - ID: 5.540"
N I	136705-200	35691-21010	2nd Brake	.078/2.0	98-On	4	12T - ID: 5.640"
N I	136707-180	35692-21010	1st / Reverse	.071/1.8	98-On	7	12T - ID: 5.640"
N I	136709-200	34263-21010	Underdrive Brake (#1)	.078/2.0	98-On	4	40T - ID: 3.904"
N I	136711-180	34264-21010	Underdrive Brake (#2)	.071/1.8	98-On	4	11T - ID: 3.663"

FILTERS

ILL	ALTO No.	REF No.	Description	Spec	Year	Qty	Notes
N I	136940	35330-21020	Filter - U140E (2wd)		98-On	1	
N I	136942	35330-28010	Filter - Rav4 (4wd)		98-On	1	
N I	136942	35330-0W010	Filter - RX300 (4wd)		00-On	1	

METAL CLAD SEALS

ILL	ALTO No.	REF No.	Description	Spec	Year	Qty	Notes
N I	044400A	90301-38064	Front Pump		98-On	1	
N I	065410	90311-12002	Manual Lever		98-On	1	
N I	065423	90311-40010	Axle - Converter Side (2wd)		98-On	1	
N I	136405	90311-62004	Axle - Converter Side (4wd)		98-On	1	
N I	065424	90311-50011	Axle - Case Side (All)		98-On	1	
N I	136406	90311-58009	Transfer Case - Left Output		98-On	1	
N I	136407	90311-34021	Transfer Case - Right Bearing Ret. - outer		98-On	1	
N I	136408	90311-37001	Transfer Case - Right Bearing Ret. - inner		98-On	1	
N I	136409	90311-38062	Transfer Case - Extension Housing		98-On	1	

SEALING RINGS

ILL	ALTO No.	REF No.	Description	Spec	Year	Qty	Notes
KT	136600	NA	Sealing Ring Kit		98-On	1	
N I	136100	35613-21010	Front Pump Stator		98-On	2	

TOYOTA
U140E/F
1998-On

SEALING RINGS

ILL	ALTO No.	REF No.	Description	Spec	Year	Qty	Notes
N I	136101	35653-21010	Rear Clutch Drum		98-On	2	
N I	136102	34244-21010	Underdrive Direct (#2) Clutch Drum		98-On	2	

MOLDED PISTONS

ILL	ALTO No.	REF No.	Description	Spec	Year	Qty	Notes
KT	136670	NA	Piston Kit		98-On	1	4 pistons
N I	136300	NA	Piston- Direct Apply		98-On	1	
N I	136301	NA	Piston- Direct Balance		98-On	1	
N I	136302	NA	Piston- Underdrive Apply		98-On	1	
N I	136303	NA	Piston- Underdrive Balance		98-On	1	

HARD PARTS

ILL	ALTO No.	REF No.	Description	Spec	Year	Qty	Notes
N I	136350	35720-21031	Front Planetary		98-On	1	

TOYOTA
U150E/F
2002-On

KITS

*Add Suffix SK for Super Kit

ILL	Description	Years	Friction Module	Steel Module	Overhaul Kit	Banner Kit	Master Kit
KT	Rebuilding Kit - with Molded Pistons	02-On	163752	163753	163800	163901LS	163901
KT	Rebuilding Kit - without Molded Pistons	02-On	163752	163753	163800X	163901XLS	163901X

FRICTION CLUTCHES

ILL	ALTO No.	REF No.	Description	Spec	Year	Qty	Notes
N I	136700A180	35633-33090	Forward (#1 Clutch)	.071/1.8	02-On	5	HEG - 40T - OD: 5.387" - SB
N I	136702-152	35667-33010	Direct (#2 Clutch)	.060/1.52	02-On	3	HEG - 40T - OD: 6.180" - PL
N I	136704-180	35681-33010	Brake #1	.071/1.8	02-On	4	HEG - 40T - OD: 6.700" - PL
N I	136706-180	35682-28010	Brake #2	.071/1.8	02-On	6	HEG - 40T - OD: 6.400" - SB
N I	136708-180	34261-28010	Underdrive (#1)	.071/1.8	02-On	4	HEG - 40T - OD: 4.918" - PL
N I	136710-180	34262-33010	Underdrive (#2)	.071/1.8	02-On	4	HEG - 28T - OD: 4.635" - PL
N I	163712-170	34627-33010	Overdrive Direct	.067/1.7	02-On	4	HEG - 40T - OD: 5.954" -SB

STEEL CLUTCHES

ILL	ALTO No.	REF No.	Description	Spec	Year	Qty	Notes
N I	136701-180	35634-28010	Forward (#1 Clutch)	.071/1.8	02-On	5	40T - ID: 4.500"
N I	136703-180	35647-33030	Direct (#2 Clutch)	.071/1.8	02-On	3	40T - ID: 5.540"
N I	136705-200	35691-28010	Brake #1	.078/2.0	02-On	4	12T - ID: 5.640"
N I	136707-180	35692-28010	Brake #2	.071/1.8	02-On	6	12T - ID: 5.640"
N I	136709-200	34263-28010	Underdrive (#1)	.078/2.0	02-On	4	40T - ID: 3.904"
N I	136711-180	34264-28010	Underdrive (#2)	.071/1.8	02-On	4	11T - ID: 3.663"
N I	163713-180	34616-33010	Overdrive Direct	.071/1.8	02-On	4	40T - ID: 5.008"

PRESSURE PLATES

ILL	ALTO No.	REF No.	Description	Spec	Year	Qty	Notes
N I	136760-300	35635-21010	Forward Top plate - selective	.118/3.0	02-On	AR	
N I	136760-315	35635-21020	Forward Top plate - selective	.124/3.15	02-On	AR	
N I	136760-330	35635-21030	Forward Top plate - selective	.129/3.3	02-On	AR	
N I	TBA	35635-21040	Forward Top plate - selective	.135/3.45	02-On	AR	
N I	136760-360	35635-21050	Forward Top plate - selective	.141/3.6	02-On	AR	
N I	136761-310	35675-21020	Direct Top plate - selective	.122/3.1	02-On	AR	
N I	136761-320	35675-21030	Direct Top plate - selective	.125/3.2	02-On	AR	
N I	136761-330	35675-21040	Direct Top plate - selective	.129/3.3	02-On	AR	
N I	136761-340	35675-21050	Direct Top plate - selective	.133/3.4	02-On	AR	
N I	136761-350	35675-21060	Direct Top plate - selective	.137/3.5	02-On	AR	
N I	136763-190	35678-21020	Brake #1 - selective	.074/1.9	02-On	AR	
N I	136763-200	35678-21030	Brake #1 - selective	.078/2.0	02-On	AR	
N I	136763-210	35678-21040	Brake #1 - selective	.082/2.1	02-On	AR	
N I	136763-220	35678-21050	Brake #1 - selective	.086/2.2	02-On	AR	
N I	136763-230	35678-21060	Brake #1 - selective	.090/2.3	02-On	AR	
N I	136763-240	35678-21070	Brake #1 - selective	.094/2.4	02-On	AR	
N I	136763-250	35678-21080	Brake #1 - selective	.098/2.5	02-On	AR	
N I	136762-300	35676-21070	Brake #2 - selective	.118/3.0	02-On	AR	
N I	136762-310	35676-21080	Brake #2 - selective	.122/3.1	02-On	AR	
N I	136762-320	35676-21090	Brake #2 - selective	.125/3.2	02-On	AR	
N I	136762-330	35676-21100	Brake #2 - selective	.129/3.3	02-On	AR	
N I	136762-340	35676-21110	Brake #2 - selective	.133/3.4	02-On	AR	
N I	136762-350	35676-21120	Brake #2 - selective	.137/3.5	02-On	AR	
N I	136762-360	35676-21130	Brake #2 - selective	.141/3.6	02-On	AR	
N I	136764-300	34265-21020	Underdrive (#1) - selective	.118/3.0	02-On	AR	

TOYOTA
U150E/F
2002-On

PRESSURE PLATES

ILL	ALTO No.	REF No.	Description	Spec	Year	Qty	Notes
N I	136764-320	34265-21030	Underdrive (#1) - selective	.125/3.2	02-On	AR	
N I	136764-340	34265-21040	Underdrive (#1) - selective	.133/3.4	02-On	AR	
N I	136765-300	34266-21010	Underdrive (#2) - selective	.118/3.0	02-On	AR	
N I	136765-320	34266-21020	Underdrive (#2) - selective	.125/3.2	02-On	AR	
N I	136765-340	34265-21030	Underdrive (#2) - selective	.133/3.4	02-On	AR	

FILTERS

ILL	ALTO No.	REF No.	Description	Spec	Year	Qty	Notes
N I	163940	NA	Filter		02-On	1	

MOLDED PISTONS

ILL	ALTO No.	REF No.	Description	Spec	Year	Qty	Notes
KT	163670	NA	Piston Kit		02-On	1	6 pistons
KT	163670A	NA	Piston Kit		02-On	1	7 pistons
N I	136302	NA	Piston- Underdrive Apply		02-On	1	
N I	136303	NA	Piston- Underdrive Balance		02-On	1	
N I	136304	NA	Piston- Forward Balance		02-On	1	
N I	136305	NA	Piston- Forward Apply		02-On	1	
N I	136306	NA	Piston- Overdrive Balance		02-On	1	
N I	136307	NA	Piston- Overdrive Apply		02-On	1	
N I	163301	NA	Piston- Overdrive Direct Drum		02-On	1	

TOYOTA
U240E, U241E
2000-On

KITS

*Add Suffix SK for Super Kit

ILL	Description	Years	Friction Module	Steel Module	Overhaul Kit	Banner Kit	Master Kit
KT	Rebuilding Kit - with Molded Pistons	00-On	145752	145753	145800	145901LS	145901
KT	Rebuilding Kit - without Molded Pistons	00-On	145752	145753	145800X	145901XLS	145901X

MISCELLANEOUS GASKETS & KIT COMPONENTS

ILL	ALTO No.	REF No.	Description	Spec	Year	Qty	Notes
1G	136816	35168-21010	Gasket, Oil Pan	Cork/Rub	00-On	1	
2A	136050	90301-99099	O Ring, Front Pump to case		00-On	1	
N I	044054	90301-09173	O Ring, Filler Tube & Detent Cable		00-On	2	
N I	010116B	96711-18018	O Ring, Speedometer		00-On	1	

FRICTION CLUTCHES

ILL	ALTO No.	REF No.	Description	Spec	Year	Qty	Notes
4A	136700-180	35633-21010	Forward	.071/1.8	00-On	6	HEG - 40T - OD: 5.387" - SM
11B	136702-180	35667-21010	Direct	.071/1.8	00-On	4	HEG - 40T - OD: 6.180" - PL
17C	136704-180	35681-21010	2nd Brake	.071/1.8	00-On	3-4	HEG - 40T - OD: 6.700" - PL
14C	136706-180	35682-21010	1st / Reverse	.071/1.8	00-On	5-7	HEG - 40T - OD: 6.400" - SB
20D	145708-180	34261-32020	Underdrive Brake (#1)	.071/1.8	00-On	3-4	HEG - 40T - OD: 4.487" - PL
23E	145710-180	34262-32020	Underdrive Brake (#2)	.071/1.8	00-On	3-4	HEG - 28T - OD: 4.43" - PL

STEEL CLUTCHES

ILL	ALTO No.	REF No.	Description	Spec	Year	Qty	Notes
6A	136701-180	35634-21010	Forward	.071/1.8	00-On	6	40T - ID: 4.500"
12B	136703-300	35647-21010	Direct	.118/3.0	00-On	4	40T - ID: 5.540"
18C	136705-200	35691-21010	2nd Brake	.078/2.0	00-On	4	12T - ID: 5.640"
15C	136707-180	35692-21010	1st / Reverse	.071/1.8	00-On	7	12T - ID: 5.640"
21D	145709-200	34263-32020	Underdrive Brake (#1)	.078/2.0	00-On	3	40T - ID: 3.550"
24E	145711-177	34264-32020	Underdrive Brake (#2)	.071/1.8	00-On	3	11T - ID: 3.510"

PRESSURE PLATES

ILL	ALTO No.	REF No.	Description	Spec	Year	Qty	Notes
3A	136760-300	35635-21010	Forward Top plate - selective	.118/3.0	00-On	AR	
3A	136760-315	35635-21020	Forward Top plate - selective	.124/3.15	00-On	AR	
3A	136760-330	35635-21030	Forward Top plate - selective	.129/3.3	00-On	AR	
3A	TBA	35635-21040	Forward Top plate - selective	.135/3.45	00-On	AR	
3A	136760-360	35635-21050	Forward Top plate - selective	.141/3.6	00-On	AR	
10B	136761-310	35675-21020	Direct Top plate - selective	.122/3.1	00-On	AR	
10B	136761-320	35675-21030	Direct Top plate - selective	.125/3.2	00-On	AR	
10B	136761-330	35675-21040	Direct Top plate - selective	.129/3.3	00-On	AR	
10B	136761-340	35675-21050	Direct Top plate - selective	.133/3.4	00-On	AR	
10B	136761-350	35675-21060	Direct Top plate - selective	.137/3.5	00-On	AR	
16C	136763-190	35678-21020	Low / Reverse Top plate - selective	.074/1.9	00-On	AR	
16C	136763-200	35678-21030	Low / Reverse Top plate - selective	.078/2.0	00-On	AR	
16C	136763-210	35678-21040	Low / Reverse Top plate - selective	.082/2.1	00-On	AR	
16C	136763-220	35678-21050	Low / Reverse Top plate - selective	.086/2.2	00-On	AR	
16C	136763-230	35678-21060	Low / Reverse Top plate - selective	.090/2.3	00-On	AR	
16C	136763-240	35678-21070	Low / Reverse Top plate - selective	.094/2.4	00-On	AR	
16C	136763-250	35678-21080	Low / Reverse Top plate - selective	.098/2.5	00-On	AR	
13C	136762-300	35676-21070	2nd Brake Top plate - selective	.118/3.0	00-On	AR	
13C	136762-310	35676-21080	2nd Brake Top plate - selective	.122/3.1	00-On	AR	
13C	136762-320	35676-21090	2nd Brake Top plate - selective	.125/3.2	00-On	AR	

TOYOTA
U240E, U241E
2000-On

PRESSURE PLATES

ILL	ALTO No.	REF No.	Description	Spec	Year	Qty	Notes
13C	136762-330	35676-21100	2nd Brake Top plate - selective	.129/3.3	00-On	AR	
13C	136762-340	35676-21110	2nd Brake Top plate - selective	.133/3.4	00-On	AR	
13C	136762-350	35676-21120	2nd Brake Top plate - selective	.137/3.5	00-On	AR	
13C	136762-360	35676-21130	2nd Brake Top plate - selective	.141/3.6	00-On	AR	
19D	136764-300	34265-32010	Underdrive Brake (#1) - selective	.118/3.0	00-On	AR	
19D	136764-320	34265-32020	Underdrive Brake (#1) - selective	.125/3.2	00-On	AR	
19D	136764-340	34265-32030	Underdrive Brake (#1) - selective	.133/3.4	00-On	AR	
22E	136765-300	34266-32010	Underdrive Direct (#2) - selective	.118/3.0	00-On	AR	
22E	136765-320	34266-32020	Underdrive Direct (#2) - selective	.125/3.2	00-On	AR	
22E	136765-340	34265-32030	Underdrive Direct (#2) - selective	.133/3.4	00-On	AR	

FILTERS

ILL	ALTO No.	REF No.	Description	Spec	Year	Qty	Notes
5G	136942	35330-28010	Filter		00-On	1	

METAL CLAD SEALS

ILL	ALTO No.	REF No.	Description	Spec	Year	Qty	Notes
7A	044400A	90301-38064	Front Pump		00-On	1	
8G	065410	90311-12002	Manual Lever		00-On	1	
N I	065423	90311-40010	Axle - Converter Side		00-On	1	
N I	065424	90311-50011	Axle - Case Side		00-On	1	

SEALING RINGS

ILL	ALTO No.	REF No.	Description	Spec	Year	Qty	Notes
KT	136600	NA	Sealing Ring Kit		00-On	1	
9A	136100	35613-21010	Front Pump Stator		00-On	2	
25B	136101	35653-21010	Rear Clutch Drum		00-On	2	
N I	136102	34244-21010	Underdrive Direct (#2) Clutch Drum		00-On	2	

MOLDED PISTONS

ILL	ALTO No.	REF No.	Description	Spec	Year	Qty	Notes
KT	145670	NA	Piston Kit		00-On	1	6 pistons
N I	136300	NA	Piston- Direct Apply		00-On	1	
N I	136301	NA	Piston- Direct Balance		00-On	1	
N I	136304	NA	Piston- Forward Balance		00-On	1	
N I	136305	NA	Piston- Forward Apply		00-On	1	
N I	145300	NA	Piston- Underdrive Apply		00-On	1	
N I	145301	NA	Piston- Underdrive Balance		00-On	1	

TOYOTA
U250E
2005-On

KITS

*Add Suffix SK for Super Kit

ILL	Description	Years	Friction Module	Steel Module	Overhaul Kit	Banner Kit	Master Kit
KT	Rebuilding Kit with Molded Pistons	01-On	136752A	136753A	136802	136903LS	136903
KT	Rebuilding Kit without Molded Pistons	01-On	136752A	136753A	136802X	136903XLS	136903X

FRICTION CLUTCHES

ILL	ALTO No.	REF No.	Description	Spec	Year	Qty	Notes
N I	136700A180	NA	Forward	.071/1.8	01-On	5	HEG - 40T - OD: 5.387" - SB
N I	136702-152	NA	Direct	.060/1.52	01-On	3	HEG - 40T - OD: 6.180" - PLNI
N I	136704-180	NA	#1 Brake (2nd)	.071/1.8	01-On	3	HEG - 40T - OD: 6.700" - PL
N I	136706-190	NA	#2 Brake (1st / Rev)	.075/1.9	01-On	5	HEG - 40T - OD: 6.400" - SB
N I	163712-170	NA	Overdrive Direct	.067/1.7	01-On	3	HEG - 40T - OD: 5.954"- SB
N I	145708-180	NA	Underdrive #1	.071/1.8	01-On	3	HEG - 40T - OD: 4.482" - PL
N I	145710-180	NA	Underdrive #2	.071/1.8	01-On	3	HEG - 28T - OD: 4.430" - PL

STEEL CLUTCHES

ILL	ALTO No.	REF No.	Description	Spec	Year	Qty	Notes
N I	136701-180	NA	Forward	.071/1.8	01-On	5	40T - ID: 4.499"
N I	136703-180	NA	Direct	.071/1.8	01-On	3	40T - ID: 5.538"
N I	136705-200	NA	#1 Brake (2nd)	.079/2.0	01-On	3	12 Base 16 Teeth - ID: 5.634"
N I	136707-180	NA	#2 Brake (1st / Rev)	.071/1.8	01-On	5	12 Base 16 Teeth - ID: 5.634"
N I	163713-180	NA	Overdrive Direct	.071/1.8	01-On	3	40T - ID: 5.008"
N I	145709-200	NA	Underdrive #1	.079/2.0	01-On	3	40T - ID: 3.576"
N I	145711-177	NA	Underdrive #2	.070/1.77	01-On	3	11T - ID: 3.514"

FILTERS

ILL	ALTO No.	REF No.	Description	Spec	Year	Qty	Notes
N I	163940	35330-08010	Filter		01-On	1	

MOLDED PISTONS

ILL	ALTO No.	REF No.	Description	Spec	Year	Qty	Notes
KT	136671	NA	Piston Kit		01-On	1	8 pistons
N I	136300	NA	Piston- Direct Apply		01-On	1	
N I	136301	NA	Piston- Direct Balance		01-On	1	
N I	136304	NA	Piston- Forward Balance		01-On	1	
N I	136305	NA	Piston- Forward Apply		01-On	1	
N I	136306	NA	Piston- Overdrive Balance		01-On	1	
N I	136307	NA	Piston- Overdrive Apply		01-On	1	
N I	145300	NA	Piston- Underdrive Apply		01-On	1	
N I	145301	NA	Piston- Underdrive Balance		01-On	1	

TOYOTA
U340E, U341E/F
2000-On

KITS

*Add Suffix SK for Super Kit

ILL	Description	Years	Friction Module	Steel Module	Overhaul Kit	Banner Kit	Master Kit
KT	Rebuilding Kit - with Molded Pistons	00-On	144752	144753	144800	144901LS	144901
KT	Rebuilding Kit - without Molded Pistons	00-On	144752	144753	144800X	144901XLS	144901X

MISCELLANEOUS GASKETS & KIT COMPONENTS

ILL	ALTO No.	REF No.	Description	Spec	Year	Qty	Notes
N I	144816	35168-52020	Gasket, Oil Pan	Cork/Rub	00-On	1	
N I	044054	90301-09173	O Ring, Filler Tube & Detent Cable		00-On	2	
N I	065058	96711-24018	O Ring, Speedometer		00-On	1	

FRICTION CLUTCHES

ILL	ALTO No.	REF No.	Description	Spec	Year	Qty	Notes
N I	144700-180	35633-52020	Forward	.071/1.8	00-On	4	HEG - 40T - OD: 5.100 - SB
N I	144702-180	35667-52020	Direct	.071/1.8	00-On	3	HEG - 40T - OD: 4.370 - SB
N I	144704-180	35682-52020	2nd Brake	.071/1.8	00-On	3-4	HEG - 32T - OD: 6.325 - SB
N I	144706-180	35683-52020	Low / Reverse Brake	.071/1.8	00-On	4	HEG - 43T - OD: 6.035 - SB
N I	144708-185	35677-52020	Reverse	.073/1.85	00-On	2-3	HEG - 32T - OD: 4.590 - SB
N I	144710-180	34633-52020	Overdrive Brake	.071/1.8	00-On	2	HEG - 40T - OD: 6.325 - SB

STEEL CLUTCHES

ILL	ALTO No.	REF No.	Description	Spec	Year	Qty	Notes
N I	144701-188	35634-52020	Forward	.074/1.88	00-On	4	30T - ID: 4.270
N I	144703-300	35675-52040	Direct	.118/3.0	00-On	3	30T - ID: 3.400
N I	144705-200	35692-52020	2nd Brake - U341	.078/2.0	00-On	3	13T - ID: 5.650
N I	144705-300	35678-52020	2nd Brake - U340	.118/3.0	00-On	2-3	13T - ID: 5.650
N I	144707-177	35693-52040	Low / Reverse Brake	.070/1.77	00-On	4	13T - ID: 5.400
N I	144709-178	35648-52020	Reverse	.070/1.77	00-On	2-3	30T - ID: 3.858
N I	144711-300	34625-52060	Overdrive Brake	.118/3.0	00-On	2	15T - ID: 5.650

FILTERS

ILL	ALTO No.	REF No.	Description	Spec	Year	Qty	Notes
N I	144940	35330-20020	Filter - Echo, Celica, Corolla		00-On	1	

METAL CLAD SEALS

ILL	ALTO No.	REF No.	Description	Spec	Year	Qty	Notes
N I	044400A	90311-38064	Front Pump - Brown	Vamac®	00-On	1	
N I	044400B	90311-38077	Front Pump - Black	Viton®	00-On	1	
N I	065430	90311-34023	Axle - Converter Side		00-On	1	
N I	065426	90311-34022	Axle - Case Side		00-On	1	
N I	065410	90311-12002	Manual Lever		00-On	1	

SEALING RINGS

ILL	ALTO No.	REF No.	Description	Spec	Year	Qty	Notes
KT	144600	NA	Sealing Ring Kit		00-On	1	
N I	144100	35613-52010	Front Pump Stator		00-On	2	
N I	144101	35712-52020	Input Shaft		00-On	1	
N I	144102	35617-52020	Intermediate Shaft		00-On	3	

TOYOTA

U340E, U341E/F

2000-On

MOLDED PISTONS

ILL	ALTO No.	REF No.	Description	Spec	Year	Qty	Notes
KT	144670	NA	Piston Kit		00-On	1	3 pistons

TOYOTA

U660E/F 2007-On
U760E/F 2008-On

KITS

*Add Suffix SK for Super Kit

ILL	Description	Years	Friction Module	Steel Module	Overhaul Kit	Banner Kit	Master Kit
KT	Rebuilding Kit - U660E with Molded Pistons	07-On	199752	199753	199800	199901LS	199901
KT	Rebuilding Kit - U660E without Molded Pistons	07-On	199752	199753	199800X	199901XLS	199901X
KT	Rebuilding Kit - U760E with Molded Pistons	08-On	199752A	199753A	199802	199903LS	199903
KT	Rebuilding Kit - U760E without Molded Pistons	08-On	199752A	199753A	199802X	199903XLS	199903X

FRICTION CLUTCHES

ILL	ALTO No.	REF No.	Description	Spec	Year	Qty	Notes
N I	199700-180	NA	C1 - 1st, 2nd, 3rd, 4th drive	.070/1.78	07-On	4-5	HEG - 40T - OD: 6.552" - SB
N I	199700-180	NA	C2 - 4th, 5th, 6th drive	.070/1.78	07-On	4-5	HEG - 40T - OD: 6.552" - SB
N I	199704-185	NA	B1 - 2nd, 6th brake	.073/1.85	07-On	4-3	HEG - 40T - OD: 6.982" - SB
N I	199706-150	NA	B2 - 1st, Reverse brake	.060/1.52	07-On	5	HEG - 40T - OD: 7.242" - SB
N I	199704-185	NA	B3 - 3rd, 5th, Reverse brake	.073/1.85	07-On	3	HEG - 40T - OD: 6.982" - SB

STEEL CLUTCHES

ILL	ALTO No.	REF No.	Description	Spec	Year	Qty	Notes
N I	199701-180	NA	C1 - 1st, 2nd, 3rd, 4th drive	.071/1.8	07-On	3-4	40T - ID: 5.674"
N I	199701-215	NA	C2 - 4th, 5th, 6th drive	.085/2.16	07-On	1-3	40T - ID: 5.674"
N I	199701-300	NA	C2 - 4th, 5th, 6th drive	.118/3.00	08-On	1	40T - ID: 5.674"
N I	199701-340	NA	C2 - 4th, 5th, 6th drive	.134/3.40	08-On	1	40T - ID: 5.674"
N I	199705-185	35691-07010	B1 - 2nd, 6th brake	.073/1.85	07-On	4	11T - ID: 6.045"
N I	199705-240	NA	B1 - 2nd, 6th brake	.094/2.40	08-On	3	11T - ID: 6.045"
N I	199707-160	35682-07010	B2 - 1st, Reverse brake	.063/1.6	07-On	5	16T - ID: 6.430"
N I	199709-220	35693-07010	B3 - 3rd, 5th, Reverse brake	.087/2.21	07-On	2	11T - ID: 6.045"
N I	199709-300	NA	B3 - 3rd, 5th, Reverse brake	.118/3.00	08-On	1	11T - ID: 6.045"

FILTERS

ILL	ALTO No.	REF No.	Description	Spec	Year	Qty	Notes
N I	199940	35330-30050	Filter - U660		07-On	1	
N I	199942	35330-73010	Filter - U760		07-On	1	

BUSHINGS

ILL	ALTO No.	REF No.	Description	Spec	Year	Qty	Notes
KT	199625B	NA	Bushing Kit, U660 and U760	Bi-Metal	07-On	1	8 Bushings
N I	199200	NA	Bushing, Front Pump - U660		07-On	1	
N I	199201	NA	Bushing, Front Pump - U760		08-On	1	
N I	199202	NA	Bushing, Front and Rear Sungear		07-On	4	
N I	199203	NA	Bushing, Planet Carrier		07-On	1	
N I	199204	NA	Bushing, Input Shaft		07-On	1	

PISTONS

ILL	ALTO No.	REF No.	Description	Spec	Year	Qty	Notes
N I	199670	NA	Molded Piston Kit - U660		07-On	1	5 Pistons
N I	199671	NA	Molded Piston Kit - U760		08-On	1	4 Pistons
N I	199310	NA	B3 Clutch - Apply - U660 only		07-On	1	Viton
N I	199311	NA	C1 Clutch - Apply		07-On	1	Viton
N I	199312	NA	C1 Clutch - Balance		07-On	1	Viton
N I	199313	NA	C2 Clutch - Apply - U660 only		07-On	1	Viton
N I	199313A	NA	C2 Clutch - Apply - U760 only		08-On	1	Viton
N I	199314	NA	C2 Clutch - Bonded Lip Seal		07-On	1	Viton

TOYOTA

U660E/F 2007-On
U760E/F 2008-On

HARD PARTS

ILL	ALTO No.	REF No.	Description	Spec	Year	Qty	Notes
N I	199352	NA	Planetary Assembly - Rear		07-On	1	
N I	199651	NA	Planetary Assembly & Accessory Kit - Rear		07-On	1	

TOYOTA/HINO

A860 Small Truck

2006-On

KITS

*Add Suffix SK for Super Kit

ILL	Description	Years	Friction Module	Steel Module	Overhaul Kit	Banner Kit	Master Kit
KT	Rebuilding Kit - without Pistons	06-On	131752	131753	131800X	131901XLS	131901X

FRICTION CLUTCHES

ILL	ALTO No.	REF No.	Description	Spec	Year	Qty	Notes
N I	131700-200	NA	K1 Clutch	.079/2.00	06-On	6	HEG- 48T - OD: 5.250" - SB
N I	131702-200	NA	K2 Clutch	.080/2.02	06-On	4	HEG- 56T - OD: 7.313" - SB
N I	131704-200	NA	K3 Clutch	.080/2.02	06-On	4	HEG- 72T - OD: 7.313"
N I	131706-205	NA	B1 Clutch	.081/2.05	06-On	5	HEG- 66T - OD: 7.284" - SB
N I	131708-170	NA	B2 Clutch	.067/1.69	06-On	7	HEG- 66T - OD: 7.286" - SB

STEEL CLUTCHES

ILL	ALTO No.	REF No.	Description	Spec	Year	Qty	Notes
N I	131701-243	NA	K1 Clutch	.096/2.43	06-On	6	20T - ID: 4.133"
N I	131703-242	NA	K2 Clutch	.095/2.42	06-On	8	20T - ID: 6.333"
N I	131703-242	NA	K3 Clutch	.095/2.42	06-On	8	20T - ID: 6.333"
N I	131707-280	NA	B1 Clutch	.110/2.80	06-On	4	16T - ID: 5.588"
N I	131709-280	NA	B2 Clutch	.110/2.80	06-On	6	16T - ID: 6.129"

VOLKSWAGEN

AUDI 3 SPEED 1975-93

010, 087, 089, 090

A>

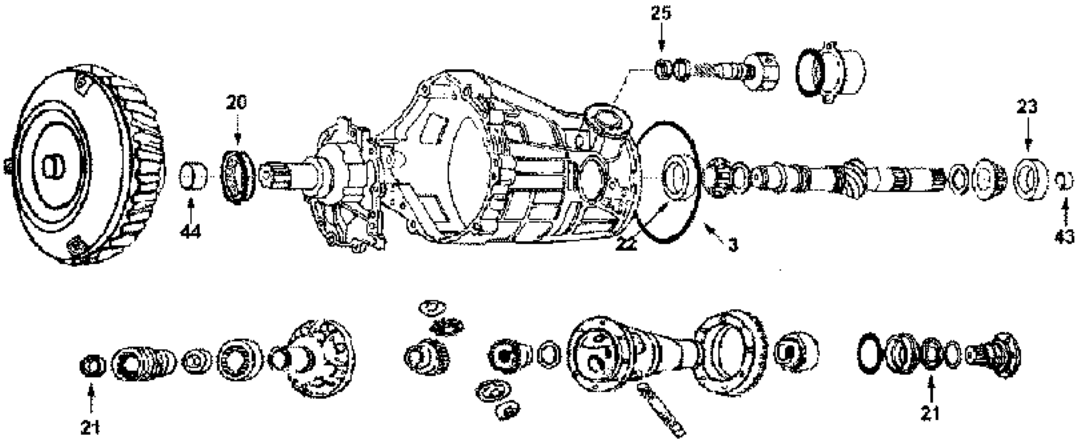

B>

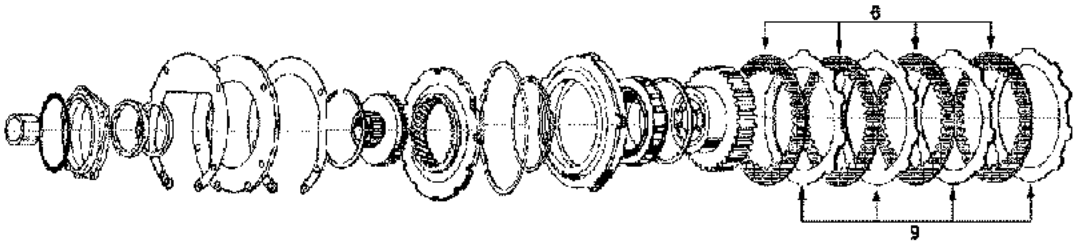

1st Intermediate Clutch

C>

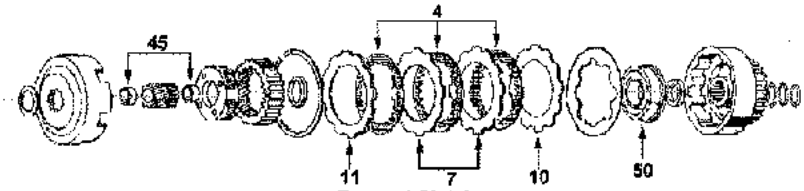

Forward Clutch

D>

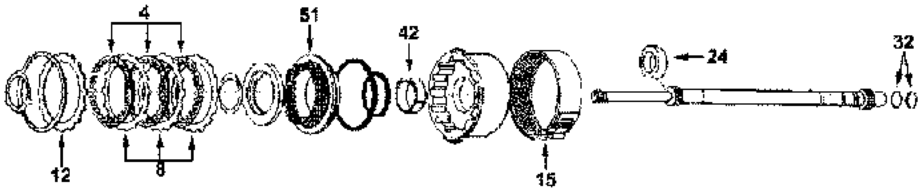

Direct / Reverse Clutch

E>

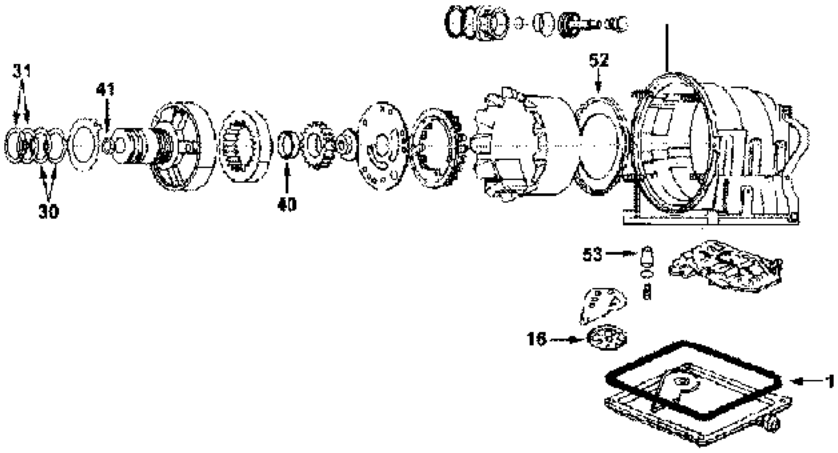

VOLKSWAGEN

AUDI 3 SPEED 1975-93

010, 087, 089, 090

KITS

*Add Suffix SK for Super Kit

ILL	Description	Years	Friction Module	Steel Module	Overhaul Kit	Banner Kit	Master Kit
KT	Rebuilding Kit - 010 without Final Drive	75-93	046752	046753	046800	046901LS	046901
KT	Rebuilding Kit - 010 with Final Drive	75-93	046752	046753	046802	046901ALS	046901A
KT	Rebuilding Kit - 087 without Final Drive	84-91	046752A	046753A	046800	046903LS	046903
KT	Rebuilding Kit - 087 with Final Drive	84-91	046752C	046753C	046802A	046907ALS	046907A
KT	Rebuilding Kit - 089 without Final Drive	75-91	046752A	046753A	046800	046903LS	046903
KT	Rebuilding Kit - 089 with Final Drive	75-91	046752A	046753A	046802A	046903ALS	046903A
KT	Rebuilding Kit - 090 with Final Drive	78-91	046752B	046753B	046802A*	046905ALS	046905A
	* Must Add sub kit 046803V for coverage						

MISCELLANEOUS GASKETS & KIT COMPONENTS

ILL	ALTO No.	REF No.	Description	Spec	Year	Qty	Notes
1E	046816	010-321-371B	Gasket, Oil Pan - 010, 087, 089	M.Rubber	75-93	1	
1E	046818	090-507-215	Gasket, Oil Pan - 090	M.Rubber	78-91	1	
2E	046004	010-325-443	Gasket, Filter		75-93	1	
N I	010209B	003-321-419	Speedometer		75-93	1	
3A	046050A	010-409-549B	Lathe Cut, Final Drive to case		75-93	1	Replaces O Ring

FRICTION CLUTCHES

ILL	ALTO No.	REF No.	Description	Spec	Year	Qty	Notes
4C	046700	010-323-241C	Forward - All	.061/1.55	75-93	3-5	Tan - 48T - OD: 4.756" - SM
5D	046702	010-323-141C	Direct/Reverse - 010, 089, 090	.090/2.3	75-93	3-5	Tan - 48T - OD: 4.756" - PL
5D	046706	087-323-141A	Direct/Reverse - 087	.090/2.3	84-91	5	Tan - 49T - OD: 5.000" - PL
6B	046704	010-323-231C	1st Intermediate (Low / Reverse)	.061/1.55	75-93	3-5	Tan - 30T - OD: 6.679" - SM

STEEL CLUTCHES

ILL	ALTO No.	REF No.	Description	Spec	Year	Qty	Notes
7C	046701	010-323-139A	Forward - All	.079/2.0	75-93	2-4	17T - ID: 4.100"
8D	046701	010-323-139A	Direct/Reverse - 010, 089, 090	.079/2.0	75-93	3-5	17T - ID: 4.100"
8D	046707	087-323-139	Direct/Reverse - 087	.079/2.0	84-91	5	53T - ID: 4.059"
9B	046703	010-323-227A	1st Intermediate (Low / Reverse)	.079/2.0	75-93	3-5	8T - ID: 6.182"

PRESSURE PLATES

ILL	ALTO No.	REF No.	Description	Spec	Year	Qty	Notes
10C	TBA	010-323-237A	Forward Bottom - except Diesel		75-93	1	
10C	TBA	010-323-237B	Forward Bottom - Diesel		75-93	1	
11C	TBA	010-323-153	Forward Top - selective	6.3	75-93	AR	
11C	TBA	010-323-253B	Forward Top - selective	6.8	75-93	AR	
11C	TBA	010-323-253C	Forward Top - selective	7.2	75-93	AR	
11C	TBA	010-323-253D	Forward Top - selective	7.6	75-93	AR	
11C	TBA	010-323-253F	Forward Top - selective	6.0	75-93	AR	
11C	TBA	010-323-253G	Forward Top - selective	2.3	75-93	AR	
11C	TBA	010-323-253H	Forward Top - selective	2.7	75-93	AR	
11C	TBA	010-323-253J	Forward Top - selective	3.1	75-93	AR	
11C	TBA	010-323-253K	Forward Top - selective	3.5	75-93	AR	
11C	TBA	010-323-253L	Forward Top - selective	3.9	75-93	AR	
12C	TBA	010-323-153	Direct Top - 010, 089, 090	6.3	75-93	1	
12C	TBA	087-323-153	Direct Top - 087		84-91	1	

VOLKSWAGEN

AUDI 3 SPEED 1975-93

010, 087, 089, 090

BANDS

ILL	ALTO No.	REF No.	Description	Spec	Year	Qty	Notes
15D	046950	010-323-461A	2nd Gear Brake	Tan	75-93	1	

FILTERS (add Prefix FK for FILTER KIT)

ILL	ALTO No.	REF No.	Description	Spec	Year	Qty	Notes
16E	046940	010-325-421	Filter - Rectangular		75-76	1	
16E	046942	010-325-421A	Filter - Round with Off Center Hole		77-93	1	

METAL CLAD SEALS

ILL	ALTO No.	REF No.	Description	Spec	Year	Qty	Notes
20A	046400	010-409-568	Front Pump - 010, 087, 089		75-93	1	
20A	034400	003-519-089D	Front Pump - 090		78-91	1	
24D	046403	087-323-559A	Turbine Shaft to Pump Shaft - All		75-93	1	
21A	046425	010-409-255	Axle - Left & Right 010		75-83	2	
21A	046425A	020-301-189M	Axle - Left & Right 010		84-93	2	
22A	046401	010-409-085E	Final Drive Pinion - Front 010		75-93	1	
23A	046402	010-409-529C	Final Drive Pinion - Rear 010		75-93	1	
25A	046405	087-409-133A	Governor 087		84-91	1	
21A	109426	016-409-399B	Axle - Left & Right 087	60mm	84-91	2	
22A	046406	087-409-085B	Final Drive Pinion - Front 087		84-91	2	
23A	046407	087-409-529D	Final Drive Pinion - Rear 087		84-91	2	
25A	046405	087-409-133A	Governor 089		75-91	1	
21A	046426	016-409-399B	Axle - Left & Right 089	60mm	75-91	2	
22A	046408	089-409-085B	Final Drive Pinion - Front 089		75-91	1	
23A	046409	089-409-529D	Final Drive Pinion - Rear 089		75-91	1	
21A	046426	016-409-399B	Axle - Left & Right 090	60mm	78-91	2	
22A	046401	010-409-085E	Final Drive Pinion - Front 090		78-91	1	
23A	046409	089-409-529D	Final Drive Pinion - Rear 090		78-91	2	

SEALING RINGS

ILL	ALTO No.	REF No.	Description	Spec	Year	Qty	Notes
KT	046600	G710	Sealing Ring Kit - 6M		75-93	1	
30E	034100	003-321-261	Rear Pump Stator to Forward Drum		75-93	2	
31E	046101	010-321-261	Rear Pump Stator to Direct Drum		75-93	2	
32D	046102	010-323-557A	Turbine Shaft		75-93	2	

BUSHINGS

ILL	ALTO No.	REF No.	Description	Spec	Year	Qty	Notes
KT	046625	NA	Bushing Kit		75-93	1	
40E	109200A	003-321-253	Oil Pump Body		75-93	1	
41E	109201	003-323-611	Oil Pump Drive Gear		75-93	1	
42D	046201	010-323-115	Direct Drum		75-93	1	
43A	046203	089-409-639A	Pinion Shaft - 010, 089		75-93	1	
43A	046203A	087-409-639A	Pinion Shaft - 087		84-91	1	
44A	109201	003-323-611	Torque Converter		75-93	1	
45C	046202	010-323-017A	Sun Gear		75-93	2	

VOLKSWAGEN

AUDI 3 SPEED 1975-93

010, 087, 089, 090

MOLDED PISTONS

ILL	ALTO No.	REF No.	Description	Spec	Year	Qty	Notes
50C	046315	010-323-217A	Forward Clutch Drum		75-93	1	
51D	046317A	010-323-121B	Direct / Reverse Drum		78-93	1	
52E	046325	010-323-479A	1st Intermediate Piston without Bleed valve		75-82	1	
52E	046325A	010-323-512A	1st Intermediate Piston with Bleed valve		83-93	1	
53E	046331	003-325-405C	Accumulator Piston		75-93	1	

VOLKSWAGEN

AUDI 4 SPEED 1989-On

095, 096, 097, 098 (AG4), 01M, 01N, 01P

A>

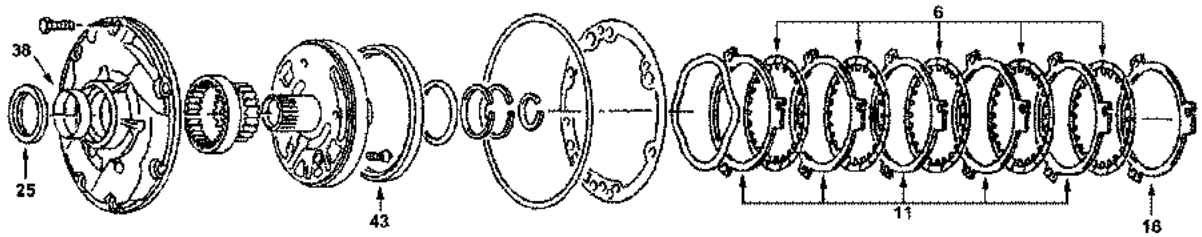

B2 (2-4 Clutch)

B>

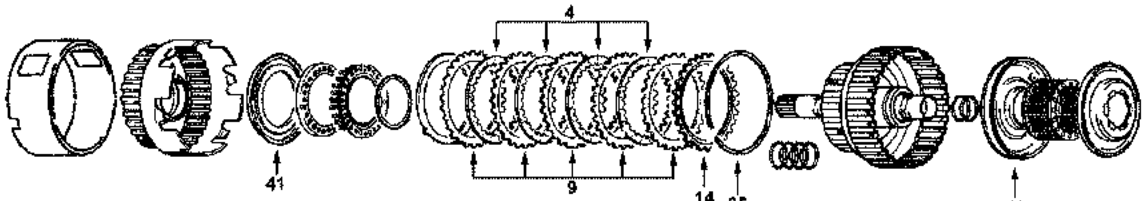

K2 (Reverse Clutch)

C>

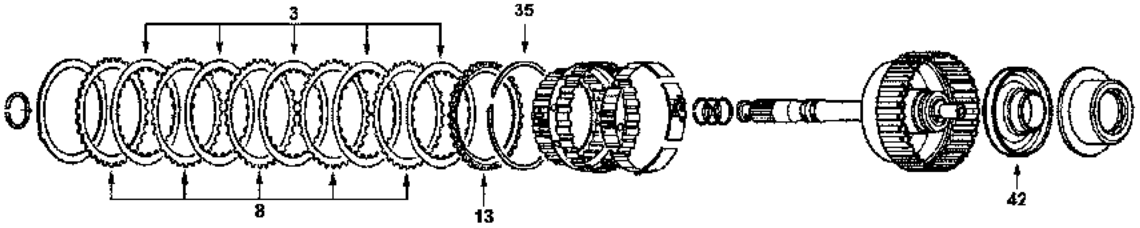

K1 (1-3 Clutch)

D>

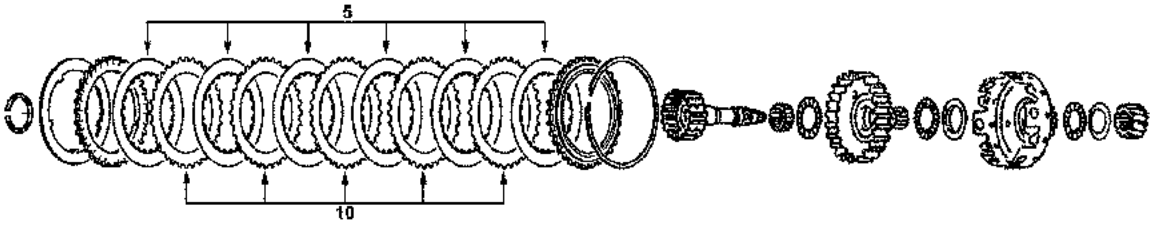

K3 (3-4 Clutch)

E>

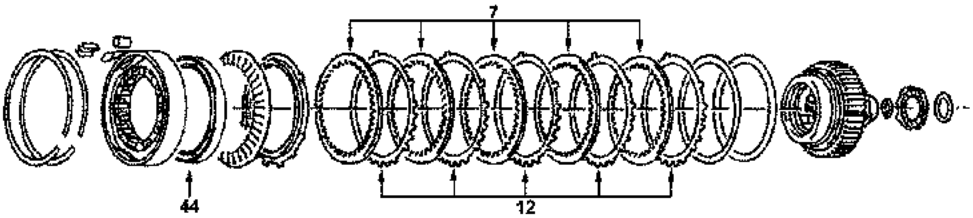

B1 (Low / Reverse Clutch)

VOLKSWAGEN

AUDI 4 SPEED 1989-On

095, 096, 097, 098 (AG4), 01M, 01N, 01P

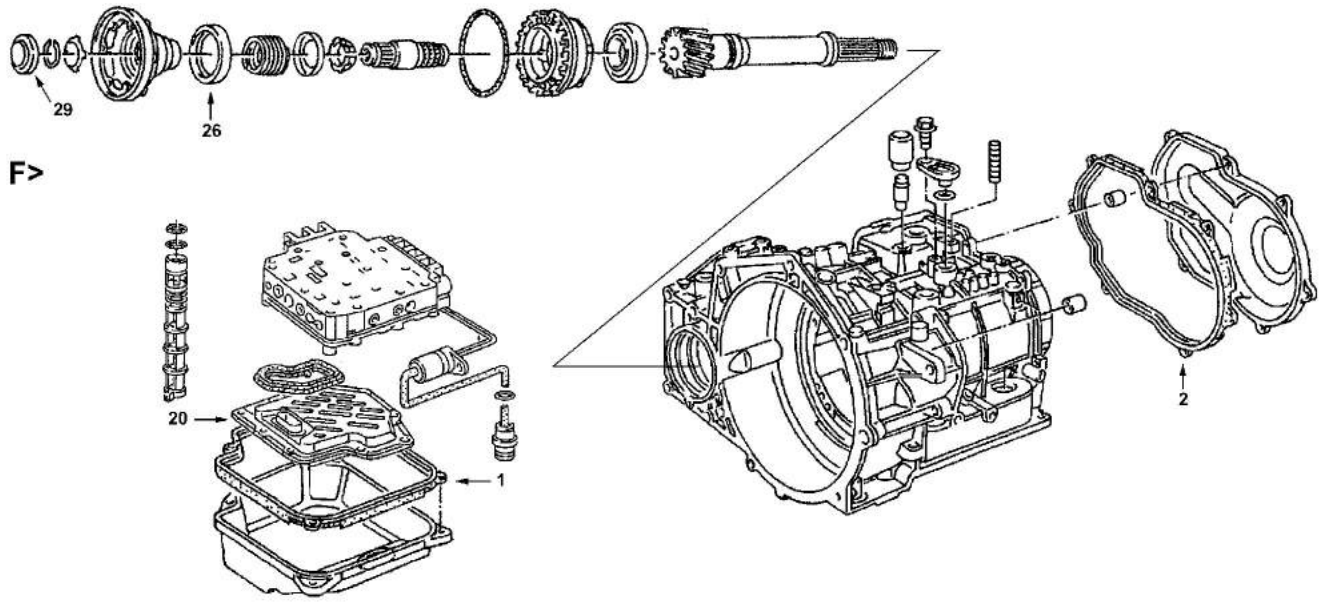

KITS ***Add Suffix SK for Super Kit**

ILL	Description	Years	Friction Module	Steel Module	Overhaul Kit	Banner Kit	Master Kit
KT	Rebuilding Kit - 095, 096 with Molded Pistons	89-95	109752	109753	109800	109901LS	109901
KT	Rebuilding Kit - 095, 096 without Molded Pistons	89-95	109752	109753	109800A	109901ALS	109901A
KT	Rebuilding Kit - 01M with Molded Pistons	96-On	109752D	109753D	109800B	109901BLS	109901B
KT	Rebuilding Kit - 01M VR-6 Only with Molded	00-03	109752DX	109753DX	109800B	109901BXLS	109901BX
KT	Rebuilding Kit - 01M without Molded Pistons	96-On	109752D	109753D	109800A	109901CLS	109901C
KT	Rebuilding Kit - 01M VR-6 Only without Molded	00-03	109752DX	109753DX	109800C	109901CXLS	109901CX
KT	Rebuilding Kit - 097 with Molded Pistons	89-95	109752	109753	109806	109907LS	109907
KT	Rebuilding Kit - 097 without Molded Pistons	89-95	109752	109753	109806A	109907ALS	109907A
KT	Rebuilding Kit - 01N with Molded Pistons	96-On	109752D	109753D	109806B	109907BLS	109907B
KT	Rebuilding Kit - 01N without Molded Pistons	96-On	109752D	109753D	109806C	109907CLS	109907C
KT	Rebuilding Kit - 098 with Molded Pistons	91-95	109752A	109753A	109802	109903LS	109903
KT	Rebuilding Kit - 098 without Molded Pistons	91-95	109752A	109753A	109802A	109903ALS	109903A
KT	Rebuilding Kit - 01P with Molded Pistons	96-On	109752E	109753E	109802C	109903BLS	109903B
KT	Rebuilding Kit - 01P without Molded Pistons	96-On	109752E	109753E	109802A	109903CLS	109903C

MISCELLANEOUS GASKETS & KIT COMPONENTS

ILL	ALTO No.	REF No.	Description	Spec	Year	Qty	Notes
1F	109819	096-321-370	Gasket, Oil Pan - 096, 01M	M.Rubber	89-On	1	
1F	109819C	097-321-371	Gasket, Oil Pan - 097	M.Rubber	89-On	1	
1F	109819A	01N-321-370	Gasket, Oil Pan - 01N	M.Rubber	96-On	1	
1F	109819B	098-321-370	Gasket, Oil Pan - 098, 01P	M.Rubber	91-On	1	
2F	109821	096-321-488	Gasket, Rear Cover - 096, 01M	M.Rubber	89-On	1	
2F	109821B	098-321-493	Gasket, Rear Cover - 098	M.Rubber	89-94	1	
2F	109821A	01P-321-493	Gasket, Rear Cover - 098, 01P	M.Rubber	95-On	1	

VOLKSWAGEN

AUDI 4 SPEED 1989-On

095, 096, 097, 098 (AG4), 01M, 01N, 01P

FRICTION CLUTCHES

ILL	ALTO No.	REF No.	Description	Spec	Year	Qty	Notes
3C	109700	NA	K1 (Forward)	.063/1.6	89-On	4-5	HEG - 24T - OD: 4.800" - PL
4B	109700	NA	K2 (Reverse)	.063/1.6	89-On	4-5	HEG - 24T - OD: 4.800" - PL
5D	109706	NA	K3 (3 - 4 Clutch)	.063/1.6	89-95	4-6	HEG - 22T - OD:3.771 - PLNI
5D	109716	NA	K3 (3 - 4 Clutch)	.063/1.6	96-On	3-4	HEG - 22T - OD:4.057 - CPL
5D	109716-120	NA	K3 (3 - 4 Clutch) 01M VR-6 only (1 sided) - internal spline	.049/1.24	00-03	7	HEG - 22T - OD: 4.057 - CPL
10D	109717-120	NA	K3 (3 - 4 Clutch) 01M VR-6 only (1 sided) - external spline	.048/1.22	00-03	7	HEG - 28T - ID: 2.839" - CPL
6A	109702	095-323-495	B2 (Brake) - Front	.063/1.6	89-On	3-4	Tan - 32T - OD: 6.096" - PL
7E	109704	095-323-231A	B1 (Reverse Brake) - Rear	.063/1.6	89-95	4-6	HEG - 50T - OD: 5.743" - SM
7E	109704A	095-323-231C	B1 (Reverse Brake) - Rear	.063/1.6	96-On	4-6	HEG - 50T - OD: 5.743" - SB

FRICTION CLUTCHES - HI-PERFORMANCE - Red Eagle®

ILL	ALTO No.	REF No.	Description	Spec	Year	Qty	Notes
5D	109746-160	NA	K3 (3 - 4 Clutch)	.063/1.6	89-95	4-6	Red - 22T - OD: 3.771" - PLNI
5D	109746A160	NA	K3 (3 - 4 Clutch)	.063/1.6	96-On	3-4	Red - 22T - OD: 4.057" - PL

STEEL CLUTCHES

ILL	ALTO No.	REF No.	Description	Spec	Year	Qty	Notes
8C	109701	NA	K1 (Forward)	.079/2.0	89-95	4-5	32T - ID: 4.095"
8C	109701-145	NA	K1 (Forward)	.057/1.45	96-On	4-5	32T - ID: 4.095"
9B	109701	NA	K2 (Reverse)	.079/2.0	89-On	5	32T - ID: 4.095"
10D	109707	095-323-463	K3 (3 - 4 Clutch)	.079/2.0	89-95	3-5	26T - ID: 2.835"
10D	109717-145	NA	K3 (3 - 4 Clutch)	.057/1.45	96-On	3-4	28T - ID: 2.835"
10D	109717-160	NA	K3 (3 - 4 Clutch) - selective	.063/1.6	96-On	AR	28T - ID: 2.835"
10D	109717	NA	K3 (Overdrive - 3rd/4th shift) - AR4 only	.078/2.0	96-On	AR	28T - ID: 2.835"
11A	109703	097-323-463	B2 (Brake) - Front	.079/2.0	89-On	5-7	3T - ID: 5.361"
12E	109705	095-323-227	B1 (Reverse Brake) - Rear	.079/2.0	89-95	6	12T - ID: 5.078"
12E	109705-145	095-323-227A	B1 (Reverse Brake) - Rear	.057/1.45	96-On	6	12T - ID: 5.078"

STEEL CLUTCHES - HI-PERFORMANCE - Kolene®

ILL	ALTO No.	REF No.	Description	Spec	Year	Qty	Notes
8C	109701K	NA	K1 (Forward)	.079/2.0	89-95	4-5	Kol -32T - ID: 4.095"
8C	109701K145	NA	K1 (Forward)	.057/1.45	96-On	4-5	Kol -32T - ID: 4.095"
9B	109701K	NA	K2 (Reverse)	.079/2.0	89-On	5	Kol -32T - ID: 4.095"
10D	109717K145	NA	K3 (3 - 4 Clutch)	.057/1.45	96-On	3-4	Kol -28T - ID: 2.835"

PRESSURE PLATES

ILL	ALTO No.	REF No.	Description	Spec	Year	Qty	Notes
13C	109760	NA	K1 (Forward) - selective	.118/3.0	89-On	AR	
13C	109760A520	NA	K1 (Forward) - selective	.205/5.2	89-On	AR	
13C	109760A640	NA	K1 (Forward) - selective	.253/6.4	89-On	AR	
14C	109760	NA	K2 (Reverse) - selective	.118/3.0	89-On	AR	
14C	109760A520	NA	K2 (Reverse) - selective	.205/5.2	89-On	AR	
17D	109762A570	NA	K3 (3-4 clutch) 01M VR-6 only (1 sided) - external spline		00-03	1	stepped
17D	109762B	NA	K3 (3-4 clutch) 098		91-95	1	stepped
16A	109703-225	097-323-463A	B2 (Brake) - selective	.089/2.25	89-On	AR	
16A	109703-250	097-323-463B	B2 (Brake) - selective	.098/2.5	89-On	AR	
16A	109703-275	097-323-463G	B2 (Brake) - selective	.108/2.75	89-On	AR	
16A	109703-300	097-323-463C	B2 (Brake) - selective	.118/3.0	89-On	AR	
16A	TBA	097-323-463D	B2 (Brake) - selective	.128/3.25	89-On	AR	

VOLKSWAGEN

AUDI 4 SPEED 1989-On

095, 096, 097, 098 (AG4), 01M, 01N, 01P

PRESSURE PLATES

ILL	ALTO No.	REF No.	Description	Spec	Year	Qty	Notes
16A	TBA	097-323-463E	B2 (Brake) - selective	.138/3.5	89-On	AR	
16A	TBA	097-323-463F	B2 (Brake) - selective	.148/3.75	89-On	AR	

OEI® Original Equipment Improvements

ILL	ALTO No.	REF No.	Description	Spec	Year	Qty	Notes
KT	109757	NA	PowerPack® - K-3 (3-4 Clutch) 01M, 01N		96-On	1	
KT	109757A	NA	PowerPack® - K-3 (3-4 Clutch) 01P		96-On	1	
N I	109985	SK-VW01M	VB Shift Kit®	Transgo®	95-On	1	

FILTERS

ILL	ALTO No.	REF No.	Description	Spec	Year	Qty	Notes
20F	109940	095-325-429C	Filter - 096, 097, 098		89-95	1	
20F	109941	01M-325-429	Filter - 01M, 01N, 01P		96-On	1	

METAL CLAD SEALS

ILL	ALTO No.	REF No.	Description	Spec	Year	Qty	Notes
25A	109400	095-321-243A	Front Pump		89-On	1	
N I	109410	095-321-182B	Manual Lever		89-On	1	
26F	109425	020-301-189T	Axle - Left & Right 096, 01M	2.575	89-On	2	
N I	109402	095-323-862A	Pinion 096, 01M	1.978	89-91	1	
N I	109402A	096-323-862	Pinion 096, 01M	2.060	92-On	1	
N I	TBA	020-409-289B	Left Axle cap 096, 01M		89-On	1	
26F	109426	016-409-399B	Axle - Right 01N	2.000	89-On	1	
26F	109429	097-409-399A	Axle - Right 097		89-95	1	
26F	109425	020-301-189T	Axle - Left 01N	2.575	89-On	1	
26F	109428	097-409-400D	Axle - Left 097		89-95	1	
N I	109403	097-409-529A	Pinion 097, 01N	3.630	89-On	1	
N I	109417	097-321-491A	Pinion Cover 097, 01N		89-On	1	
N I	109416	097-321-073A	Rear Cover 097, 01N		89-On	2	
N I	109415	020-409-289B	Left Axle cap 097, 01N		89-On	1	
26F	109426	016-409-399B	Axle - Right & Left 098, 01P	2.000	91-On	2	
N I	109404	098-323-862A	Pinion 098, 01P	2.295	91-On	1	
N I	TBA	002-517-289A	Left Axle Cap 098, 01P		91-On	1	

SEALING RINGS

ILL	ALTO No.	REF No.	Description	Spec	Year	Qty	Notes
KT	109600	G708A	Sealing Ring Kit - 12M		89-On	1	
30A	109100	095-321-261A	Stator Support - Large		89-On	2	
31A	109101	095-321-262	Stator Support - Small		89-On	1	
32C	109104	095-323-570A	Turbine Shaft	21mm	89-On	3	
33C	109103	095-323-560	Input Shaft - Rear	28mm	89-94	1	
34B	109102	095-323-557C	Input Shaft - Front	30mm	89-On	3-5	

BUSHINGS

ILL	ALTO No.	REF No.	Description	Spec	Year	Qty	Notes
KT	109625	NA	Bushing Kit		89-On	1	
38A	109200	NA	Front Pump Body		89-On	1	

VOLKSWAGEN

AUDI 4 SPEED 1989-On

095, 096, 097, 098 (AG4), 01M, 01N, 01P

ELECTRONIC CONTROL COMPONENTS

ILL	ALTO No.	REF No.	Description	Spec	Year	Qty	Notes
N I	109502	095-927-333	Solenoid EPC		89-On	1	
N I	109504	095-927-331A	Solenoid Shift		89-On	1	
N I	109505	01M-927-365	095/096/01M Internal Wiring Harness		89-On	1	
N I	109506	097-927-365D	097/01N Wiring Harness with Case connector		89-On	1	
N I	109507	098-927-365/A	098/01 Internal Wiring Harness		91-On	1	

MOLDED PISTONS

ILL	ALTO No.	REF No.	Description	Spec	Year	Qty	Notes
KT	109670	NL	Kit - Molded Pistons (5)		89-95	1	w/o shaft covers
KT	109670A	NL	Kit - Molded Pistons (7)		96-On	1	w/o shaft covers
40B	109330	095-323-217B	K1 (Forward)		89-95	1	
40B	109330A	095-323-217G	K1 (Forward)		96-On	1	
N I	109335	095-323-257	K1 (Forward) spring retainer		96-On	1	
41B	109332	095-323-121E	K2 (Reverse)		89-On	1	
42C	109333	095-323-927A	K3 (3 - 4 Clutch)		89-95	1	
42C	109333A	095-323-927G	K3 (3 - 4 Clutch)		96-On	1	
N I	109336	095-323-977C	K3 (3 - 4 Clutch) spring retainer		96-On	1	
43A	109331	095-321-531C	B2 (Brake) - Front		89-On	1	
44E	109334	095-323-479B	B1 (Reverse Brake) - Rear		89-On	1	

MISCELLANEOUS

ILL	ALTO No.	REF No.	Description	Spec	Year	Qty	Notes
N I	109322X	NA	Sprag B1 (Reverse Brake) - Rear		89-On	1	

VOLKSWAGEN
JATCO JF404E
2000-On

KITS

*Add Suffix SK for Super Kit

ILL	Description	Years	Friction Module	Steel Module	Overhaul Kit	Banner Kit	Master Kit
KT	Rebuilding Kit - Lupo, Polo, Seat, Arosa, Skoda, Fabia (All 1.0-1.5 Eng.)	00-On	158752	158753	158800	158901LS	158901

FRICTION CLUTCHES

ILL	ALTO No.	REF No.	Description	Spec	Year	Qty	Notes
N I	158700-160	001-398-205AK	1st & 3rd Clutch - low	.063/1.6	00-On	5	HEG - 20T - OD: 3.949" - PLNI
N I	158702-157	001-398-921K	3rd & 4th Clutch - high	.062/1.57	00-On	3	HEG - 36T - OD: 4.71" - PLNI
N I	158704-162	001-398-105K	Reverse	.064/1.62	00-On	2	Tan - 24T - OD: 4.965" - PLNI
N I	158706-160	001-323-465	Low / Reverse	.063/1.6	00-On	5	Tan - 30T - OD: 6.561" - PLNI

STEEL CLUTCHES

ILL	ALTO No.	REF No.	Description	Spec	Year	Qty	Notes
N I	158701-132	001-323-139E	1st & 3rd Clutch - low	.052/1.32	00-On	5	24T - ID: 3.186"
N I	158703-200	001-323-944	3rd & 4th Clutch - high	.079/2.0	00-On	5	24T - ID: 3.798"
N I	158703-250	NA	3rd & 4th Clutch - high	.098/2.5	01-On	3-4	24T - ID: 3.798"
N I	158705-300	001-323-139	Reverse	.118/3.0	00-On	2	15T - ID: 4.454"
N I	158707-132	001-323-463	Low / Reverse	.052/1.32	00-On	4	10T - ID: 5.467"

PRESSURE PLATES

ILL	ALTO No.	REF No.	Description	Spec	Year	Qty	Notes
N I	158760A400	001-323-139F	1st & 3rd Clutch - low	.157/4.0	00-On	1	
N I	158760A410	001-323-139P	1st & 3rd Clutch - low	.161/4.1	00-On	1	
N I	158760A420	001-323-139G	1st & 3rd Clutch - low	.165/4.2	00-On	1	
N I	158760A430	001-323-139R	1st & 3rd Clutch - low	.169/4.3	00-On	1	
N I	158760A440	001-323-139H	1st & 3rd Clutch - low	.173/4.4	00-On	1	
N I	158760A460	001-323-139J	1st & 3rd Clutch - low	.183/4.65	00-On	1	
N I	158760A470	001-323-139T	1st & 3rd Clutch - low	.185/4.7	00-On	1	
N I	158760A480	001-323-139K	1st & 3rd Clutch - low	.189/4.8	00-On	1	
N I	158760A490	001-323-139AA	1st & 3rd Clutch - low	.193/4.9	00-On	1	
N I	158760A500	001-323-139L	1st & 3rd Clutch - low	.197/5.0	00-On	1	
N I	158762A340	001-323-944B	3rd & 4th Clutch - high	.133/3.4	00-On	1	
N I	158762A380	001-323-944D	3rd & 4th Clutch - high	.148/3.75	00-On	1	
N I	158762A400	001-323-944E	3rd & 4th Clutch - high	.157/4.0	00-On	1	
N I	158762A420	001-323-944F	3rd & 4th Clutch - high	.165/4.2	00-On	1	
N I	158761A440	001-323-139C	Reverse	.170/4.3	00-On	1	
N I	158761A460	001-323-139D	Reverse	.181/4.6	00-On	1	
N I	158763A220	001-323-463A	Low / Reverse - apply	.086/2.2	00-On	1	
N I	158763A240	001-323-463B	Low / Reverse - apply	.093/2.35	00-On	1	
N I	158763A260	001-323-463C	Low / Reverse - apply	.102/2.6	00-On	1	
N I	158763A280	001-323-463D	Low / Reverse - apply	.110/2.8	00-On	1	
N I	TBA	001-323-297	Low / Reverse	.170/4.3	00-On	1	

BANDS

ILL	ALTO No.	REF No.	Description	Spec	Year	Qty	Notes
N I	158950	001-323-461	Brake	Tan	00-On	1	

FILTERS

ILL	ALTO No.	REF No.	Description	Spec	Year	Qty	Notes
N I	158940	001-325-429	Filter		00-On	1	

VOLKSWAGEN

JATCO JF404E

2000-On

METAL CLAD SEALS

ILL	ALTO No.	REF No.	Description	Spec	Year	Qty	Notes
N I	068400	001-321-243	Front Pump	59mm	00-On	1	
N I	158425	001-409-399	Axles	62mm	00-On	2	
N I	075410	001-321-199	Manual Lever		00-On	1	

VOLKSWAGEN

VW JF506E, 09A FORD 5F31J 2001-On
NISSAN RE5F01A 2001-On, MAZDA JA5A-EL 2003-05

KITS

*Add Suffix SK for Super Kit

ILL	Description	Years	Friction Module	Steel Module	Overhaul Kit	Banner Kit	Master Kit
KT	Rebuilding Kit - with Molded Piston (1)	01-On	162752	162753	162800	162901LS	162901

MISCELLANEOUS GASKETS & KIT COMPONENTS

ILL	ALTO No.	REF No.	Description	Spec	Year	Qty	Notes
N I	162816	NA	Gasket - Oil Pan	Cork/Rub	01-On	1	

FRICTION CLUTCHES

ILL	ALTO No.	REF No.	Description	Spec	Year	Qty	Notes
N I	162700-170	FP01-19-580	#1 Clutch - Direct	.068/1.73	01-On	4	HEG - 24T - OD: 4.026 - PL
N I	105706-180	FP01-19-590	#2 Clutch - Low / Reverse Brake	.071/1.8	01-On	7	HEG - 32T - OD: 6.455" - PL
N I	162704-170	FP01-19-5J0	#3 Clutch - Low	.068/1.73	01-On	7	HEG - 30T - OD: 5.426 - PL
N I	162706-160	FP01-19-3V0	#4 Clutch - 2-4 Brake	.063/1.6	01-On	3	HEG - 32T - OD: 7.534 - SB
N I	162708-152	FP01-19-610	#5 Clutch - Reverse	.060/1.52	01-On	2	HEG - 32T - OD: 6.141 - PL
N I	105702B	FP01-19-620	#6 Clutch - High	.063/1.6	01-On	5	HEG - 24T - OD: 4.416 - PL

STEEL CLUTCHES

ILL	ALTO No.	REF No.	Description	Spec	Year	Qty	Notes
N I	162701-200	FP01-19-499	#1 Clutch - Direct	.079/2.01	01-On	4	24T - ID: 3.380
N I	162701A200	NA	#1 Clutch - Direct wide tooth	.079/2.01	01-On	4	24T - ID: 3.380
N I	162703-140	FP01-19-609	#2 Clutch - Low / Reverse Brake	.055/1.4	01-On	6	10T - ID: 5.908
N I	162705-140	FP01-19-561	#3 Clutch - Low	.055/1.4	01-On	7	32T - ID: 4.841
N I	162707-300	FP01-19-3N4	#4 Clutch - 2-4 Brake	.118/3.0	01-On	2	7T - ID: 6.663
N I	162709-200	FP01-19-571	#5 Clutch - Reverse	.078/1.98	01-On	2	36T - ID: 5.614
N I	162711-240	FP01-19-6E1	#6 Clutch - High	.095/2.4	01-On	4	18T - ID: 3.596
N I	162711-160	FP01-19-6E2	#6 Clutch - High	.063/1.6	01-On	1	18T - ID: 3.596

PRESSURE PLATES

ILL	ALTO No.	REF No.	Description	Spec	Year	Qty	Notes
N I	162764-360	NA	Reverse	.141/3.6	01-On	AR	
N I	162764-380	NA	Reverse	.150/3.8	01-On	AR	
N I	162764-400	A15-37-RP0-27	Reverse	.157/4.0	01-On	AR	

SPRINGS - WAVE, BELLEVILLE, FINGER

ILL	ALTO No.	REF No.	Description	Spec	Year	Qty	Notes
N I	162768X	NA	Low - wave spring		01-On	AR	

OEI® Original Equipment Improvements

ILL	ALTO No.	REF No.	Description	Spec	Year	Qty	Notes
KT	162757	NA	DrumSaver® Kit- Overdrive		01-On	1	Contains Wave Spring

FILTERS

ILL	ALTO No.	REF No.	Description	Spec	Year	Qty	Notes
N I	162940	31728-PW001	Filter - Rover/Land Rover, Ford Galaxy, VW Sharan		98-On	1	Long Square P/U
N I	162940A	31728-PW003	Filter - VW, Audi		98-On	1	Short Rectangular P/U
N I	162942	31728-PR001	Filter - Freelander, Jaguar, Mazda, Ford		98-On	1	Round P/U

BANDS

ILL	ALTO No.	REF No.	Description	Spec	Year	Qty	Notes
N I	162950	FP01-19-360	BND JF506E, F JAG, MAZ, VW 5 SP SPLIT 99+		99-On	1	

VOLKSWAGEN

VW JF506E, 09A FORD 5F31J 2001-On
NISSAN RE5F01A 2001-On, MAZDA JA5A-EL 2003-05

BUSHINGS

ILL	ALTO No.	REF No.	Description	Spec	Year	Qty	Notes
N I	162625	NA	Bushing Kit		99-On	1	

ELECTRONIC CONTROL COMPONENTS

ILL	ALTO No.	REF No.	Description	Spec	Year	Qty	Notes
N I	162515	122992	Sensor, Input Speed JF506E, RE5F01A, 09A(AG5), 5F31J, JA5A-EL Fits: MAZDA-ROVER-VW-FORD-VOLVO-JAGUAR		99-On	1	
N I	162570A	NA	Solenoid Kit - Ford, Mazda		99-On	1	
N I	162570	NA	Solenoid Kit - Rover, Jaguar, Volkswagen		99-On	1	
N I	162504	31941-PR011	Solenoid - Rover, Jaguar, Volkswagen B2 Oil Pressude 2-4 Duty		99-On	1	
		G6T46172					
N I	162505	31941-PR008	Solenoid - Rover, Jaguar, Volkswagen B2 Brake 2-4 Timing		99-On	1	
		G6T46275					
N I	162507C	31941-PM001	Solenoid - Ford, Mazda 2-4 Shift Duty		99-On	1	
		G6T46176					
N I	162508	31941-PR015	Solenoid - Rover, Jaguar, Volkswagen, Ford, Mazda PL Duty EPC		99-On	1	
		G6T46174					

PISTONS

ILL	ALTO No.	REF No.	Description	Spec	Year	Qty	Notes
N I	162670	NA	Kit - Molded Pistons (1)		98-On	1	

VOLKSWAGEN
TR80-SD (OC8)
2009-On

KITS

ILL	Description	Years	Friction Module	Steel Module	Overhaul Kit	Banner Kit	Master Kit
KT	Rebuilding Kit	09-On	222752	222753	222800	222901LS	222901

FRICTION CLUTCHES

ILL	ALTO No.	REF No.	Description	Spec	Year	Qty	Notes
N I	185706-200	NA	Direct Clutch	.079/2.00	09-On	7	HEG - 42T - OD: 5.388" - SB
N I	207700-180	NA	Forward Clutch	.071/1.80	09-On	6	HEG - 48T - OD: 6.575" - SB
N I	222704-150	NA	Overdrive Clutch	.059/1.50	09-On	4	HEG - 36T - OD: 6.990" - SEG
N I	222702-150	NA	Reverse Clutch	.059/1.50	09-On	5	HEG - 36T - OD: 5.900" - SEG
N I	222706-150	NA	#1 Brake Clutch	.059/1.50	09-On	5	HEG - 24T - OD: 7.700"-SB
N I	222708-165	NA	#2 Brake Clutch	.065/1.65	09-On	4	HEG - 50T - OD: 6.800"-SEG

STEEL CLUTCHES

ILL	ALTO No.	REF No.	Description	Spec	Year	Qty	Notes
N I	185707-200	NA	Direct Clutch	.078/1.98	09-On	7	36T - ID: 4.496"
N I	222701-180	NA	Forward Clutch	.070/1.80	09-On	7	36T - ID: 4.496"
N I	222705-180	NA	Overdrive Clutch	.071/1.80	09-On	6	36T - ID: 6.140"
N I	222703-205	NA	Reverse Clutch	.081/2.05	09-On	5	24T - ID: 5.250"
N I	222707-205	NA	#1 Brake Clutch	.081/2.05	09-On	5	9T - ID: 7.010"
N I	222709-180	NA	#2 Brake Clutch	.071/1.80	09-On	4	24T - ID: 6.270"

TORQUE CONVERTER-FRICTION RINGS AND CLUTCHES

ILL	ALTO No.	REF No.	Description	Spec	Year	Qty	Notes
N I	222714-361	NA	Torque Converter - Friction	.142/3.61	09-On	3	OTHER- 30T - ID: 4.325"
N I	222715-203	NA	Torque Converter - Steel	.080/2.03	09-On	3	24T - OD: 6.014"
N I	222716-365	NA	Torque Converter - Friction	.144/3.65	09-On	1	OTHER - 36T - OD: 10.212"
N I	222717-325	NA	Torque Converter - Steel	.127/3.25	09-On	1	20T - ID: 8.762"
N I	222717-500	NA	Torque Converter - Steel	.197/5.00	09-On	1	20T - ID: 8.762"

FILTERS

ILL	ALTO No.	REF No.	Description	Spec	Year	Qty	Notes
N I	222940	0C8-325-435	FILTER		09-On	1	

Z F
ZF3HP22
RWD 1976-84

A>

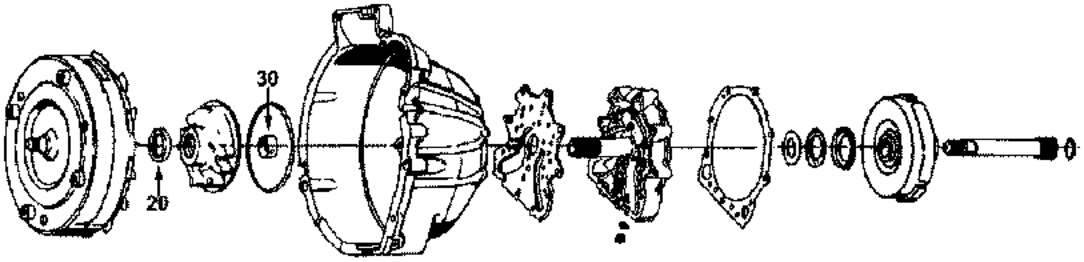

B>

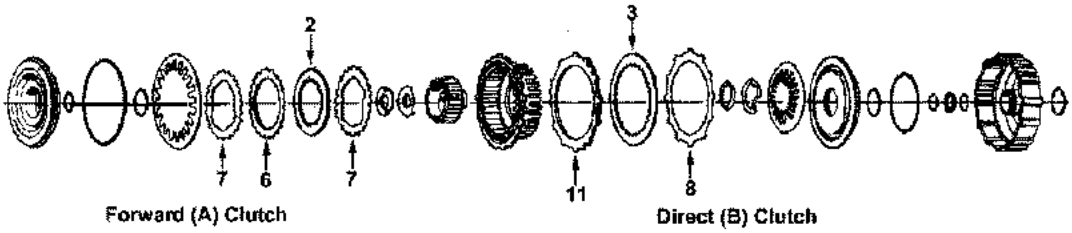

C>

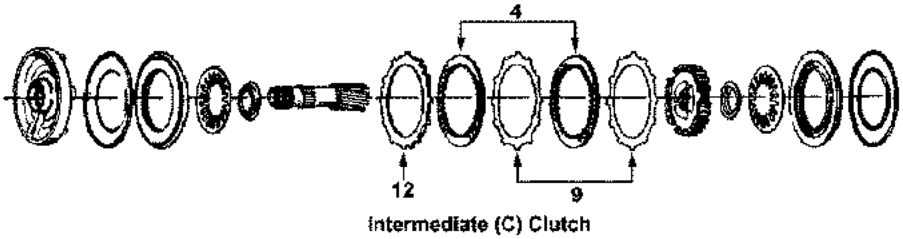

D>

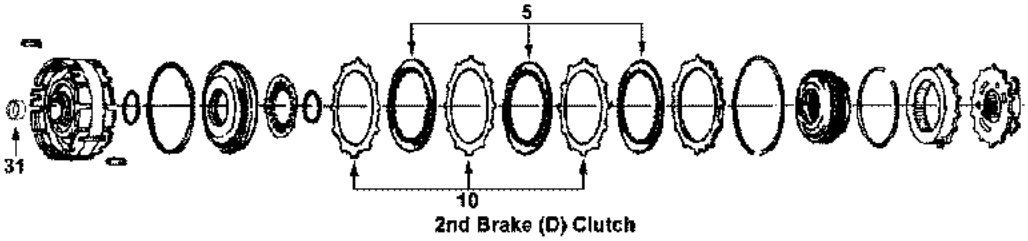

E>

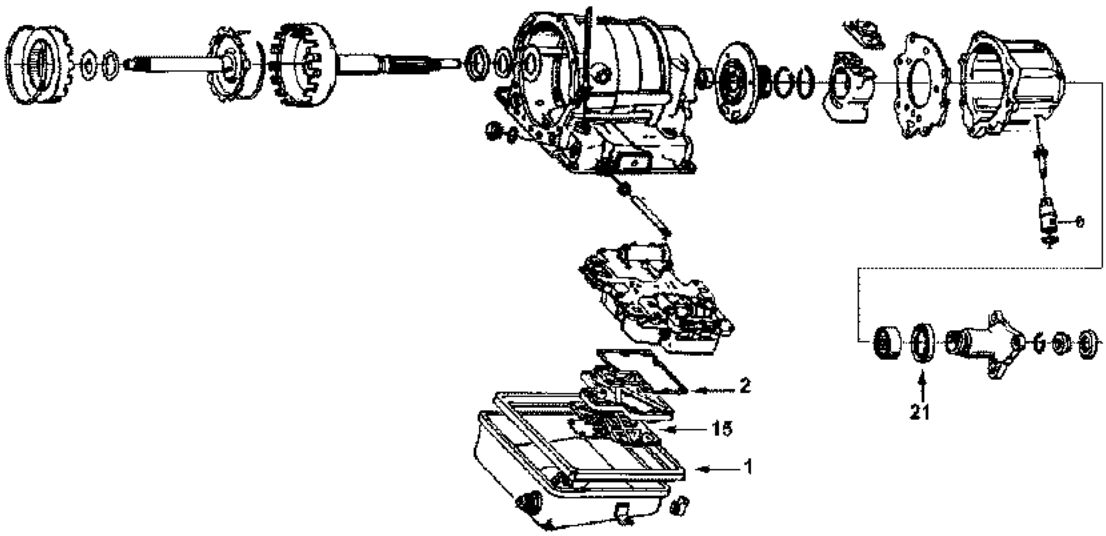

Z F
ZF3HP22
RWD 1976-84

KITS

*Add Suffix SK for Super Kit

ILL	Description	Years	Friction Module	Steel Module	Overhaul Kit	Banner Kit	Master Kit
KT	Rebuilding Kit	76-84	053752A	053753A	053800	053901LS	053901

MISCELLANEOUS GASKETS & KIT COMPONENTS

ILL	ALTO No.	REF No.	Description	Spec	Year	Qty	Notes
1E	053816	24111-205-903	Gasket, Oil Pan	M.Rubber	76-84	1	
2E	053004	24341-205-974	Gasket, Filter		76-84	1	

FRICTION CLUTCHES

ILL	ALTO No.	REF No.	Description	Spec	Year	Qty	Notes
2B	053700	1058-270-020	Forward (A) Clutch	.061/1.55	76-84	4-5	HEG - 34T - OD: 3.931" - SM
2B	053700K	NA	Forward (A) Clutch - PowerPack® Comp.	.061/1.55	76-84	AR	Kev - 34T - OD: 3.931" - SM
3B	053702	1043-202-041	Direct (B) Clutch	.059/1.5	76-84	4	Tan - 24T - OD: 5.629" - PL
4C	053702A155	NA	Direct (B) Clutch	.061/1.55	76-84	4	HEG - 24T - OD: 5.629" - PL
4C	053702	1043-202-041	Intermediate (C) Clutch	.059/1.5	76-84	4	Tan - 24T - OD: 5.629" - PL
4C	053702A155	NA	Intermediate (C) Cltuch	.061/1.55	76-84	4	HEG - 24T - OD: 5.629" - PL
5D	053704	1056-210-053	Reverse (D) Clutch	.061/1.55	76-84	4-5	HEG - 48T - OD: 5.629" - PL

STEEL CLUTCHES

ILL	ALTO No.	REF No.	Description	Spec	Year	Qty	Notes
6B	053701	1043-302-046	Forward (A) Clutch	.071/1.8	76-84	5-6	24T - ID: 3.000"
6B	053701-120	1043-302-123	Forward (A) Clutch - selective	.047/1.5	76-84	AR	24T - ID: 3.000"
6B	053701-210	1043-302-127	Forward (A) Clutch - selective	.083/2.1	76-84	AR	24T - ID: 3.000"
6B	053711	NA	Forward (A) Clutch - PowerPack® Comp.	.060/1.5	76-84	AR	24T - ID: 3.000"
7B	053721	1043-302-001	Forward (A) Clutch - wave	.040/1.0	76-84	2	24T - ID: 3.000"
8B	053703	0301-302-037	Direct (B) Clutch	.071/1.8	76-84	4	12T - ID: 4.690"
9C	053703	0301-302-037	Intermediate (C) Clutch	.071/1.8	76-84	3-4	12T - ID: 4.690"
10D	053703	0301-302-037	Reverse (D) Clutch	.071/1.8	76-84	3-4	12T - ID: 4.690"
AR	053703-120	0301-317-013	B, C, and D Clutch - selective	.047/1.2	76-84	AR	12T - ID: 4.690"
AR	053703-150	1043-302-020	B, C, and D Clutch - selective	.060/1.5	76-84	AR	12T - ID: 4.690"
AR	053703-210	1043-302-021	B, C, and D Clutch - selective	.082/2.1	76-84	AR	12T - ID: 4.690"

PRESSURE PLATES

ILL	ALTO No.	REF No.	Description	Spec	Year	Qty	Notes
11B	053703-400	24231-217-334	B Clutch - backing	.158/4.0	76-84	AR	
11B	TBA	0301-302-004	B Clutch - backing	.178/4.5	76-84	AR	
12C	053703-400	24231-217-334	C Clutch - backing	.158/4.0	76-84	AR	
12C	TBA	0301-302-004	C Clutch - backing	.178/4.5	76-84	AR	

OEI® Original Equipment Improvements

ILL	ALTO No.	REF No.	Description	Spec	Year	Qty	Notes
KT	053755	NA	PowerPack® - Forward (A) Clutch		76-84	1	Increase Torque Capacity

FILTERS

ILL	ALTO No.	REF No.	Description	Spec	Year	Qty	Notes
15E	053940	24341-209-791	Filter		76-84	1	

Z F

ZF3HP22

RWD 1976-84

METAL CLAD SEALS

ILL	ALTO No.	REF No.	Description	Spec	Year	Qty	Notes
20A	053400	0750-111-254	Front Pump		76-84	1	
21A	053405A	0750-111-204	Extension Housing		76-84	1	
N I	053410	0750-110-062	Manual Lever		76-84	1	

SEALING RINGS

ILL	ALTO No.	REF No.	Description	Spec	Year	Qty	Notes
KT	053600	G715A	Sealing Ring Kit - 3M		76-84	1	

BUSHINGS

ILL	ALTO No.	REF No.	Description	Spec	Year	Qty	Notes
30A	053200	NA	Front Pump Body		76-84	1	
31D	053205	NA	Center Support		76-84	1	

Z F
ZF4HP14
FWD 1986-94

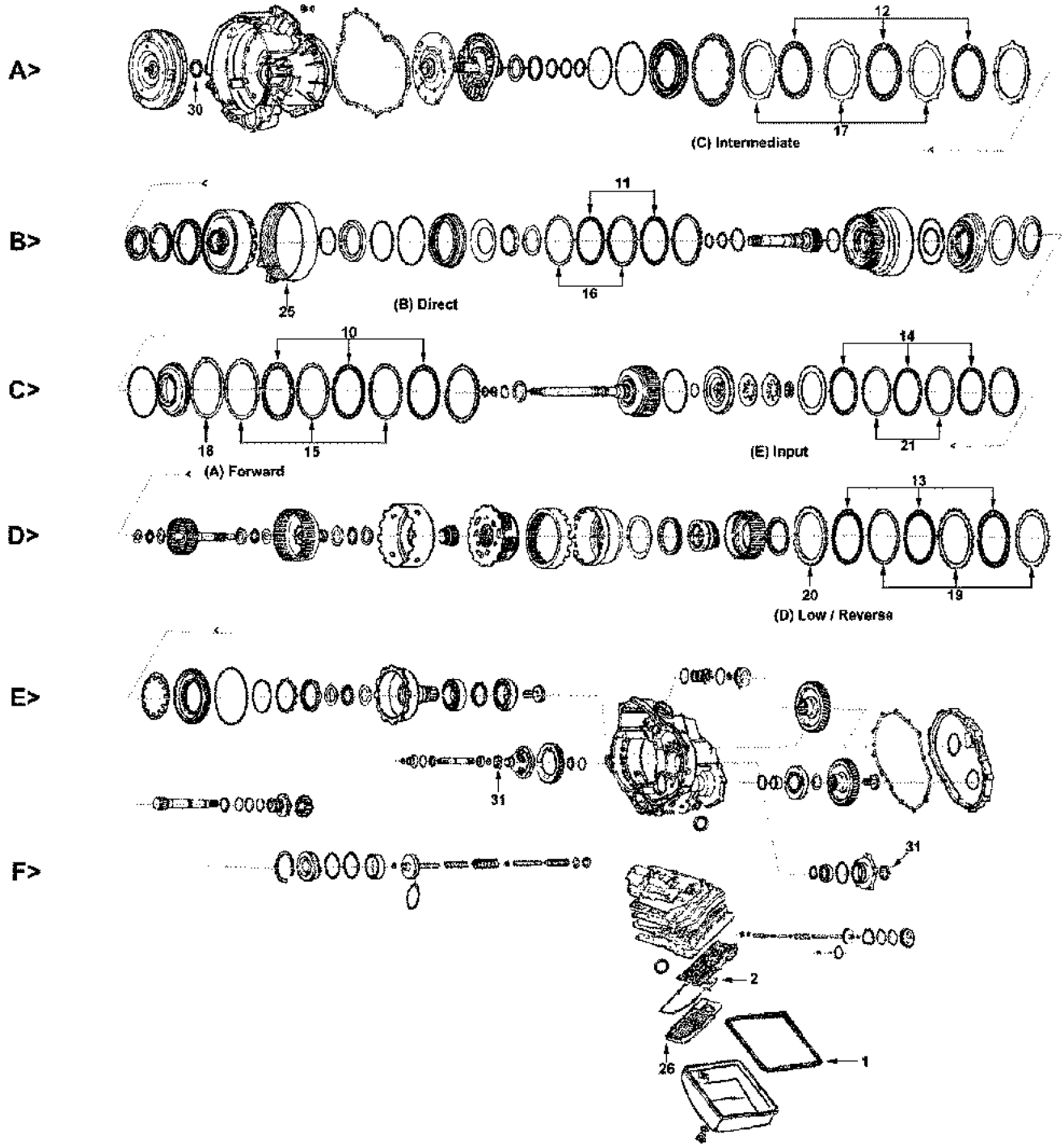

Z F
ZF4HP14
FWD 1986-94

KITS

*Add Suffix SK for Super Kit

ILL	Description	Years	Friction Module	Steel Module	Overhaul Kit	Banner Kit	Master Kit
KT	Rebuilding Kit	86-94	103752	103753	103800	103901LS	103901

MISCELLANEOUS GASKETS & KIT COMPONENTS

ILL	ALTO No.	REF No.	Description	Spec	Year	Qty	Notes
1F	103816	1036-301-182	Gasket, Oil Pan	Fiber	86-94	1	
2F	103004	1036-326-117	Gasket, Filter		86-94	1	

FRICTION CLUTCHES

ILL	ALTO No.	REF No.	Description	Spec	Year	Qty	Notes
10C	103702-155	1036-202-018	A Pack (Forward)	.061/1.55	86-94	3-5	HEG - 30T - OD: 5.309" - SM
11B	103702-195	1036-202-028	B Pack (Direct)	.077/1.95	86-94	3	HEG - 30T - OD: 5.309" - SM
12A	103702-155	1036-202-018	C Pack (Intermediate)	.061/1.55	86-94	2-3	HEG - 30T - OD: 5.309" - SM
13D	103702-155	1036-217-005	D Pack (Low/Reverse)	.061/1.55	86-94	4-5	HEG - 30T - OD: 5.309" - SM
14C	103700	1036-230-034	E Pack (Input)	.061/1.55	86-94	4-5	HEG - 36T - OD: 3.853" - SM

STEEL CLUTCHES

ILL	ALTO No.	REF No.	Description	Spec	Year	Qty	Notes
15C	103703	1036-302-015	A Pack (Forward)	.071/1.8	86-94	3-5	24T - ID: 4.730"
16B	103703	1036-302-015	B Pack (Direct)	.071/1.8	86-94	3	24T - ID: 4.730"
17A	103703	1036-302-015	C Pack (Intermediate)	.071/1.8	86-94	1-3	24T - ID: 4.730"
19D	103705	1036-317-006	D Pack (Low/Reverse)	.047/1.2	86-94	5	24T - ID: 4.730"
20D	TBA	1036-302-059	D Pack (Low/Reverse) - wave	.051/1.3	86-94	AR	24T - ID: 4.730"
21C	103701	1036-330-036	E Pack (Input)	.071/1.8	86-94	4-5	30T - ID: 2.996"

BANDS

ILL	ALTO No.	REF No.	Description	Spec	Year	Qty	Notes
25B	103950	0501-208-833	Brake	Tan	86-94	1	

FILTERS

ILL	ALTO No.	REF No.	Description	Spec	Year	Qty	Notes
26F	103940	1036-226-013	Filter		86-94	1	

METAL CLAD SEALS

ILL	ALTO No.	REF No.	Description	Spec	Year	Qty	Notes
30A	053400	0750-111-254	Front Pump	52mm	86-94	1	
31F	053425	0750-111-221	Axle	58mm	86-94	2	
N I	053410A	0634-300-040	Manual Lever	22mm	86-94	1	

SEALING RINGS

ILL	ALTO No.	REF No.	Description	Spec	Year	Qty	Notes
KT	103600	NA	Sealing Ring Kit		86-94	1	

ZF
ZF4HP16
FWD 2004-On

KITS

*Add Suffix SK for Super Kit

ILL	Description	Years	Friction Module	Steel Module	Overhaul Kit	Banner Kit	Master Kit
KT	Rebuilding Kit - ZF4HP16 with Molded Pistons	04-On	192752	192753	192800	192901LS	192901
KT	Rebuilding Kit - ZF4HP16 without Molded Pistons	04-On	192752	192753	192800X	192901XLS	192901X

FRICTION CLUTCHES

ILL	ALTO No.	REF No.	Description	Spec	Year	Qty	Notes
N I	192700-157	1063-277-002	E Clutch - Input-Top	.062/1.57	04-On	4	HEG - 30T - OD: 6.553" - PLNI
N I	192700-157	1063-277-002	B Clutch - Input-Bottom	.062/1.57	04-On	3	HEG - 30T - OD: 6.553" - PLNI
N I	192706-157	1063-273-002	D Clutch - Brake-Top	.062/1.57	04-On	3	HEG - 40T - OD: 6.158" - PLNI
N I	192703A221	1063-375-016	C Clutch - Brake-Bottom (1 sided) - external spline	.087/2.21	04-On	2	HEG - 24T - ID: 5.622" - PLNI
N I	192700-157	1063-277-002	F Clutch	.062/1.57	04-On	3	HEG - 30T - OD: 6.553" - PLNI

STEEL CLUTCHES

ILL	ALTO No.	REF No.	Description	Spec	Year	Qty	Notes
N I	192701-206	1063-370-045	E Clutch - Input-Top	.081/2.06	04-On	3	30T - ID: 5.625"
N I	192701-178	1063-370-044	E Clutch - Input-Top selective	.070/1.78	04-On	1	30T - ID: 5.625"
N I	192701-244	1063-370-044	B Clutch - Input-Bottom	.096/2.44	04-On	2	30T - ID: 5.625"
N I	192701-206	1063-370-045	B Clutch - Input-Bottom selective	.081/2.06	04-On	1	30T - ID: 5.625"
N I	192701-300	NA	B Clutch - Input-Bottom selective	.118/3.0	04-On	AR	30T - ID: 5.625"
N I	192707-178	1063-373-039	D Clutch - Brake-Top	.070/1.78	04-On	3	24T - ID: 5.272
N I	192705A300	1063-275-006	C Clutch - Brake-Bottom - internal spline	.118/3.0	04-On	1	30T - OD: 7.282"
N I	192709-175	1063-377-025	F Clutch	.069/1.75	04-On	3	16T - ID: 5.626"
N I	192709-246	1063-370-025	F Clutch selective	.097/2.46	04-On	1	16T - ID: 5.626"

BUSHINGS

ILL	ALTO No.	REF No.	Description	Spec	Year	Qty	Notes
N I	192200	NA	Bushing - Front Pump		04-On	1	

PISTONS

ILL	ALTO No.	REF No.	Description	Spec	Year	Qty	Notes
N I	192670	NA	Molded Piston Kit		04-On	1	2 pistons
N I	192300	26658-86Z00	D Clutch piston		04-On	1	
N I	192301	26826-86Z00	C Clutch piston		04-On	1	

HARD PARTS

ILL	ALTO No.	REF No.	Description	Spec	Year	Qty	Notes
N I	192350	93742035	Oil Pump OEM		04-On	1	

Z F

ZF4HP18Q (Transverse) 1986-98
ZF4HP18FL, FLA, FLE (Inline) 1988-98

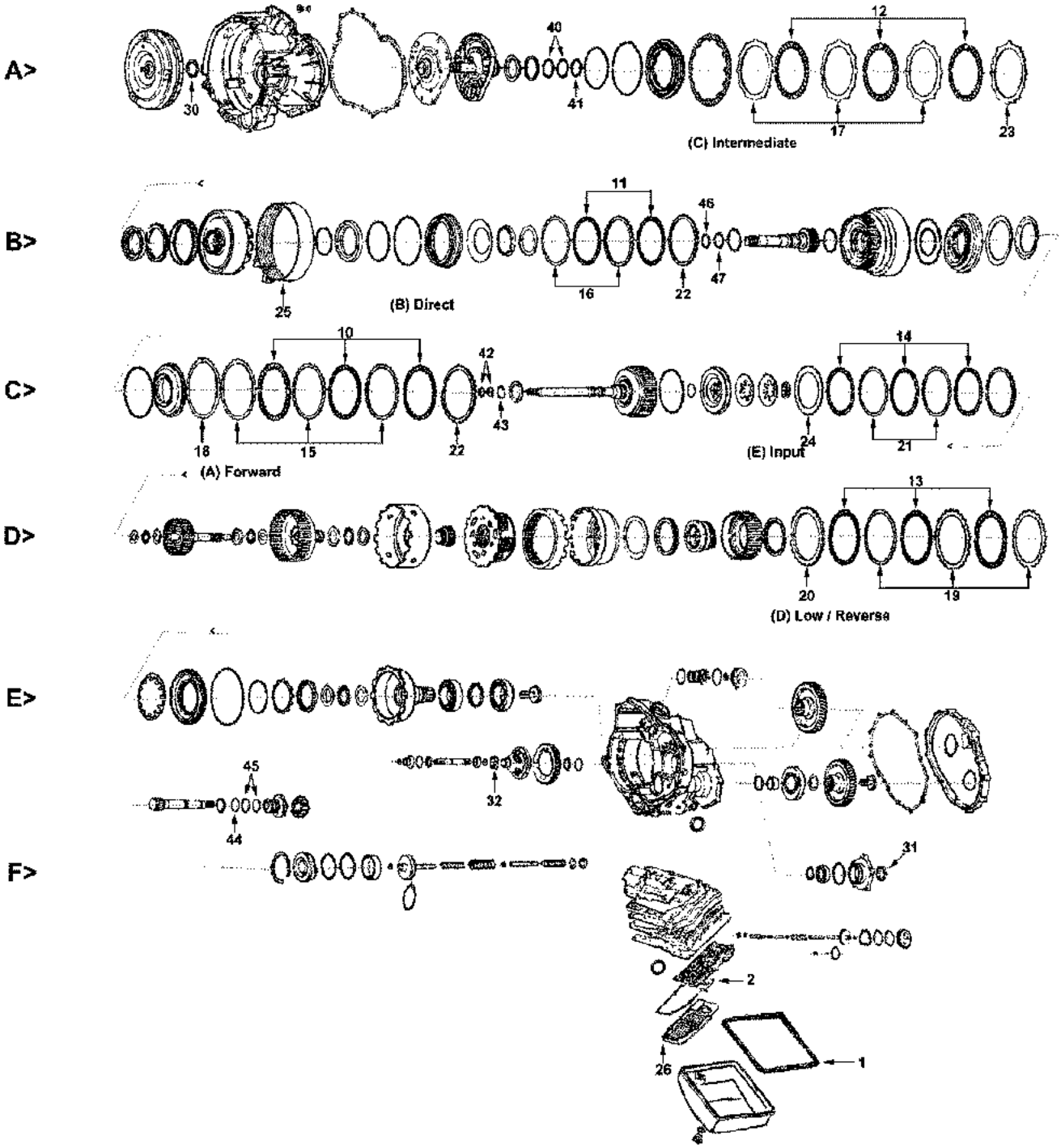

Z F

ZF4HP18Q (Transverse) 1986-98
ZF4HP18FL, FLA, FLE (Inline) 1988-98

KITS

*Add Suffix SK for Super Kit

ILL	Description	Years	Friction Module	Steel Module	Overhaul Kit	Banner Kit	Master Kit
KT	Rebuilding Kit - ZF4HP18FL Chrysler / Dodge	88-92	104752	104753	104800	104901LS	104901
KT	Rebuilding Kit - ZF4HP18FL Chrys / Dodge OE Gsk & Seal Kit	88-92	104752	104753	104800-OE	104901LS-OE	104901-OE
KT	Rebuilding Kit - ZF4HP18FLE (Audi 2WD)	90-98	104752B	104753B	104806	104907LS	104907
KT	Rebuilding Kit - ZF4HP18FLA (Audi 4WD)	90-98	104752B	104753B	104806A	104907ALS	104907A
KT	Rebuilding Kit - ZF4HP18Q Saab 9000, 9000S	86-98	104752	104753	104802	104903LS	104903
KT	Rebuilding Kit - ZF4HP18Q Alfa 164, Lancia, Citroen	90-98	104752C	104753	104802	104903ALS	104903A

MISCELLANEOUS GASKETS & KIT COMPONENTS

ILL	ALTO No.	REF No.	Description	Spec	Year	Qty	Notes
1F	104816	1050-301-036	Gasket, Oil Pan	M.Rubber	86-98	1	
2F	103004	1036-326-117	Gasket, Filter - 4HP18FL, 4HP18Q		86-98	1	

FRICTION CLUTCHES

ILL	ALTO No.	REF No.	Description	Spec	Year	Qty	Notes
10C	104702-160	1050-202-002	A Pack (Forward)	.063/1.6	86-98	4-5	HEG - 30T - OD: 5.778" - PL
11B	104702-180	1056-210-031	B Pack (Direct) - Alfa Romeo	.071/1.8	90-98	3	HEG - 30T - OD: 5.778" - PL
11B	104702-200	1056-272-024	B Pack (Direct) - All others	.079/2.0	86-98	3-4	HEG - 30T - OD: 5.778" - PL
12A	104702-180	1056-210-031	C Pack (Intermediate / Overrun) - Q	.071/1.8	86-98	3	HEG - 30T - OD: 5.778" - PL
12A	053704	1056-210-053	C Pack (Intermediate / Overrun) - FLE, FLA	.063/1.6	90-98	3-4	HEG - 48T - OD: 5.625" - PL
13D	104702-160	1050-217-002	D Pack (Low/Reverse)	.063/1.6	86-98	6	HEG - 30T - OD: 5.778" - PL
14C	104700	1050-230-033	E Pack (Input)	.063/1.6	86-98	4-5	HEG - 36T - OD: 4.250" - PL

STEEL CLUTCHES

ILL	ALTO No.	REF No.	Description	Spec	Year	Qty	Notes
15C	104703	1050-302-011	A Pack (Forward)	.071/1.8	86-98	4-5	24T - ID: 5.204"
18C	104703W100	1050-302-012	A Pack (Forward) - wave	.040/1.0	86-98	1	24T - ID: 5.204"
16B	104703	1050-302-011	B Pack (Direct)	.071/1.8	86-98	3	24T - ID: 5.204"
17A	053703	0302-302-037	C Pack (Intermediate / Overrun)	.071/1.8	86-98	3-4	12T - ID: 4.690"
19D	104703	1050-302-011	D Pack (Low/Reverse)	.071/1.8	86-98	6	24T - ID: 5.204"
21D	104701	1050-330-017	E Pack (Input)	.071/1.8	86-98	4-5	30T - ID: 3.079"

PRESSURE PLATES

ILL	ALTO No.	REF No.	Description	Spec	Year	Qty	Notes
22C	TBA	1050-302-013	A, B, D Packs - Bottom	.177/4.5	86-98	1	
23A	053703-300	1043-302-092	C Pack - Top	.118/3.0	86-98	1	
24C	104701-350	1056-330-002	E Pack (Input) - Bottom	.138/3.5	86-98	1	

BANDS

ILL	ALTO No.	REF No.	Description	Spec	Year	Qty	Notes
25B	104950	0501-208-881	Brake - 4HP18FL & 4HP18Q	Tan	86-98	1	without V6 engine
25B	104954	0501-210-101	Brake - 4HP18FLA & 4HP18FLE	Tan	86-98	1	

FILTERS

ILL	ALTO No.	REF No.	Description	Spec	Year	Qty	Notes
26F	103940	1036-226-013	Filter - 4HP18FL (Chrysler)		88-92	1	
26F	104942	0501-311-497	Filter - 4HP18Q (Cannister Type)		86-98	1	
26F	104946	0501-004-608	Filter - 4HP18FLA, 4HP18FLE (internal)		86-98	1	

Z F

ZF4HP18Q (Transverse) 1986-98
ZF4HP18FL, FLA, FLE (Inline) 1988-98

METAL CLAD SEALS

ILL	ALTO No.	REF No.	Description	Spec	Year	Qty	Notes
30A	104400	0734-310-316	Front Pump	58mm	86-98	1	
N I	053410	0634-300-040	Manual Lever	22mm	86-98	1	
31F	104425	0750-111-195	Axle - Left 4HP18FL - Chrysler	62mm	88-92	1	83505053
32E	104426	0750-111-126	Axle - Right 4HP18FL - Chrysler	55mm	88-92	1	89835053
N I	104401	83505052	Pinion - Left 4HP18FL - Chrysler	62mm	88-92	1	
N I	104402	0750-111-193	Pinion - Right 4HP18FL - Chrysler	42mm	88-92	1	89835052
31A	104427	0750-111-292	Axle, Case Side - 4HP18Q Saab	47mm	86-98	1	
31A	104427A	0750-111-219	Axle, Case Side - 4HP18Q Fiat, Lancia, Alfa	63mm	90-98	1	
31A	104427B	0750-111-221	Axle, Case Side - 4HP18Q Citroen, Peugeot	58mm	90-98	1	
32A	104428	0750-111-189	Axle, Converter Side - 4HP18Q Saab	55mm	86-98	1	
32A	104428A	0750-111-220	Axle, Converter Side - 4HP18Q Fiat, Lancia, Alfa	50mm	90-98	1	Flanged
32A	104428B	0750-111-190	Axle, Converter Side - 4HP18Q Citroen, Peugeot	50mm	90-98	1	
31A	104429	0750-111-262	Axle, Left 4HP18FLA, FLE	75mm	90-98	1	
32A	104425	0750-111-195	Axle, Right 4HP18FLA, FLE	62mm	90-98	1	
N I	104426	0750-111-126	Pinion - outer 4Hp18FLA, FLE	55mm	90-98	1	
N I	104402	0750-111-193	Pinion - inner 4HP18FLA, FLE	42mm	90-98	1	
N I	104403	0750-111-279	Rear Output shaft 4HP18FLA, FLE	70mm	90-98	1	
N I	104404	0750-111-280	Rear Output shaft 4HP18FLA, FLE	68mm	90-98	1	

SEALING RINGS

ILL	ALTO No.	REF No.	Description	Spec	Year	Qty	Notes
KT	104600	4HP18MPSR	Sealing Ring Kit - 4HP18FL, 4HP18Q		86-98	1	
KT	104600A	4HP18MPSRA	Sealing Ring Kit - 4HP18FLA, FLE		90-98	1	
40A	104100	0750-113-015	Front Pump Stator	53.9 x 58.	86-98	2	
41A	103101	0750-113-029	Front Pump Stator	48.3 x 52.	86-98	1	
42C	104101	0501-309-030	Input Shaft		86-98	2	
43C	104102	0750-113-038	Input Shaft	23.8 x 26.	86-98	1	
44E	104103	0750-113-025	Governor - outer	52 x 56	86-98	1	
45E	103102	0501-306-310	Governor - inner		86-98	2	
46B	104104	0750-113-013	Turbine Shaft, outer	28.7 x 31	86-98	1	
47B	104105	0750-113-014	Turbine Shaft, inner - 4HP18FL, 4HP18Q	29.5 x 32	86-98	1	
47B	104106	0750-113-037	Turbine Shaft, inner - 4HP18FLA, FLE	29.5 x 31	90-98	1	

BUSHINGS

ILL	ALTO No.	REF No.	Description	Spec	Year	Qty	Notes
KT	104625A	NA	Bushing Kit - 4HP18Q Saab 9000		86-98	1	
N I	104200	NA	Front Pump Body - Chrys	29.5 x 31	88-92	1	

Z F
ZF4HP20
1998-On

KITS

*Add Suffix SK for Super Kit

ILL	Description	Years	Friction Module	Steel Module	Overhaul Kit	Banner Kit	Master Kit
KT	Rebuilding Kit - with molded pistons	98-On	154752	154753	154800	154901LS	154901
KT	Rebuilding Kit - without molded pistons	98-On	154752	154753	154800X	154901XLS	154901X

MISCELLANEOUS GASKETS & KIT COMPONENTS

ILL	ALTO No.	REF No.	Description	Spec	Year	Qty	Notes
N I	154816	1019-303-008	Gasket, Side Cover	M.Rubber	98-On	1	

FRICTION CLUTCHES

ILL	ALTO No.	REF No.	Description	Spec	Year	Qty	Notes
N I	132702	1058-270-003	E Clutch (Input - Top)	.062/1.6	98-On	4-5	HEG - 30T - OD: 7.025" - PL
N I	132702	1058-270-003	B Clutch (Input - Bottom)	.062/1.6	98-On	2-3	HEG - 30T - OD: 7.025" - PL
N I	139704-155	1019-273-019	D Clutch (Brake - Top)	.060/1.55	98-On	4	HEG - 40T - OD: 6.635" - PL
N I	154702-220	1019-231-002	C Clutch (Brake - Bottom) (1 sided) - external spline Peugeot	.087/2.2	98-On	1-2	HEG - 24T - ID: 6.098" - PLI
N I	154703A160	1019-231-002	C Clutch (Brake - Bottom) (1 sided) - internal spline Mercedes & Fiat	.063/1.6	98-On	1-2	HEG - 30T - OD: 7.759" - PLNI
N I	139704-155	1019-273-019	F Clutch	.060/1.55	98-On	3	HEG - 40T - OD: 6.635" - PL

STEEL CLUTCHES

ILL	ALTO No.	REF No.	Description	Spec	Year	Qty	Notes
N I	132703-210	1019-370-049	E Clutch (Input - Top)	.083/2.1	98-On	4-5	30T - ID: 6.100"
N I	132703-240	1019-370-050	B Clutch (Input - Bottom)	.095/2.4	98-On	2-3	30T - ID: 6.100"
N I	139705-180	1019-273-023	D Clutch (Brake - Top)	.071/1.8	98-On	4	24T - ID: 5.741"
N I	154703A178	1019-331-030	C Clutch (Brake - Bottom) - Mercedes & Fiat	.071/1.8	98-On	1	24T - ID: 6.098""
N I	154703-360	1019-331-037	C Clutch (Brake - Bottom) - internal spline Peugeot	.142/3.6	98-On	1	30T - OD: 7.759"
N I	154701-270	1019-377-028	F Clutch	.106/2.7	98-On	3	17T - ID: 5.745"

PRESSURE PLATES

ILL	ALTO No.	REF No.	Description	Spec	Year	Qty	Notes
N I	TBA	1058-370-049	E Clutch (Input - Top) - Top	.154/3.9	98-On	AR	
N I	TBA	1019-370-055	E Clutch (Input - Top) - Top	.173/4.4	98-On	AR	
N I	TBA	1019-370-057	E Clutch (Input - Top) - Top	.189/4.8	98-On	AR	
N I	TBA	1019-370-048	B Clutch (Input - Bottom) - Top	.071/1.8	98-On	AR	
N I	132703-210	1019-370-049	B Clutch (Input - Bottom) - Top	.083/2.1	98-On	AR	
N I	TBA	1019-370-051	B Clutch (Input - Bottom) - Top	.106/2.7	98-On	AR	
N I	TBA	1058-370-050	B Clutch (Input - Bottom) - Top	.118/3.0	98-On	AR	
N I	139705-210	1019-373-024	D Clutch (Brake - Top) - Top	.083/2.1	98-On	AR	
N I	139705-240	1060-310-053	D Clutch (Brake - Top) - Top	.095/2.4	98-On	AR	
N I	154703A300	1019-331-031	C Clutch (Brake - Bottom) - Top	.118/3.0	98-On	1	
N I	154701-180	1019-377-024	F Clutch - Top	.071/1.8	98-On	AR	
N I	154701-300	1019-377-029	F Clutch - Top	.118/3.0	98-On	AR	
N I	154701-330	1019-377-030	F Clutch - Top	.130/3.3	98-On	AR	
N I	154701-360	1019-377-031	F Clutch - Top	.142/3.6	98-On	AR	

FILTERS

ILL	ALTO No.	REF No.	Description	Spec	Year	Qty	Notes
N I	154940	1019-222-018	Filter - Renault, Peugeot, Citroen		98-On	1	
N I	154942	1019-222-019	Filter - Mercedes, Fiat		98-On	1	

Z F

ZF4HP20

1998-On

METAL CLAD SEALS

ILL	ALTO No.	REF No.	Description	Spec	Year	Qty	Notes
N I	104400	0734-310-316	Front Pump	58mm	98-On	1	
N I	154425	0734-319-538	Axle, Front - All except Mercedes	58mm	98-On	1	
N I	154426	0734-319-556	Axle, Front - Mercedes	58mm	98-On	1	
N I	154427	0734-319-537	Axle, Rear - All except Mercedes	64mm	98-On	1	
N I	154428	0734-319-520	Axle, Rear - Mercedes	62mm	98-On	1	

MOLDED PISTONS

ILL	ALTO No.	REF No.	Description	Spec	Year	Qty	Notes
N I	154670	NA	Molded Piston Kit		98-On	1	
N I	154330	0501-314-761	D Clutch (Brake - Top)		98-On	1	
N I	154331	0501-316-134	C Clutch (Brake - Bottom) - Peugeot		98-On	1	
N I	154331A	0501-314-754	C Clutch (Brake - Bottom) - Mercedes, Fiat		98-On	1	

Z F

ZF4HP22 1983-99
ZF4HP24, ZF4HP24A 1983-99

A>

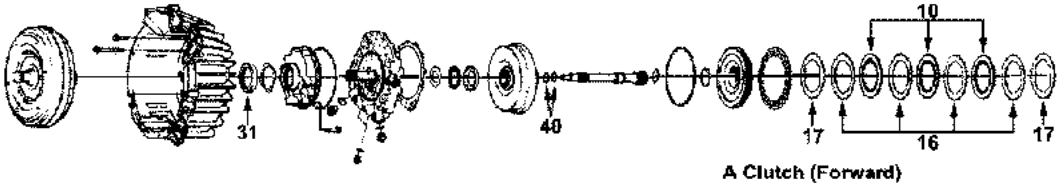

A Clutch (Forward)

B>

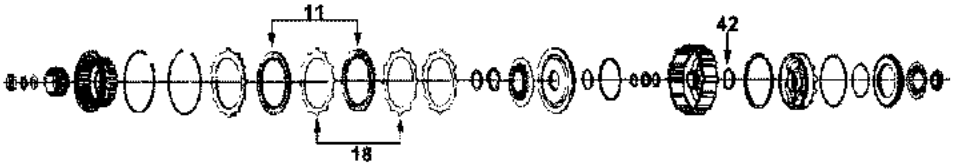

B Clutch (Direct)

C>

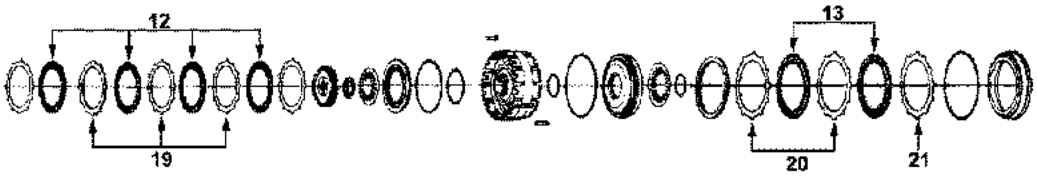

C Clutch (Intermediate)

C' Clutch (Intermediate)

D>

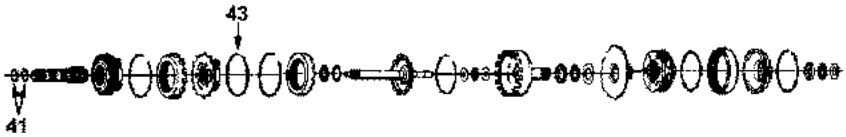

E>

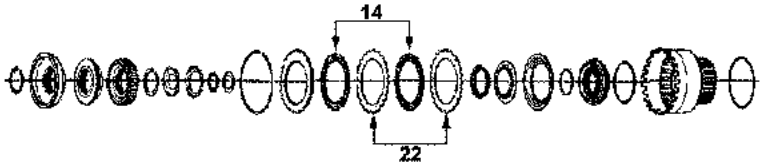

E Pack (Input)

F>

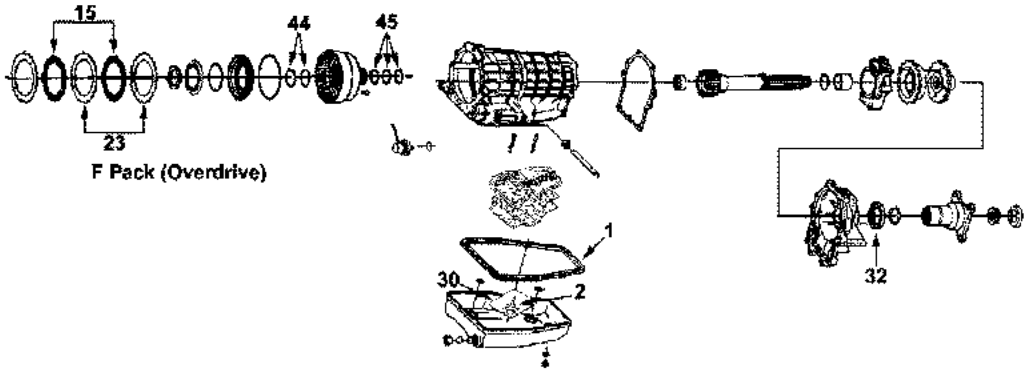

F Pack (Overdrive)

Z F

ZF4HP22 1983-99
ZF4HP24, ZF4HP24A 1983-99

KITS

*Add Suffix SK for Super Kit

ILL	Description	Years	Friction Module	Steel Module	Overhaul Kit	Banner Kit	Master Kit
KT	Rebuilding Kit - ZF4HP22	83-99	053752B	053753B	053802	053903LS	053903
KT	Rebuilding Kit - ZF4HP24	87-99	053752C	053753C	053802	053903ALS	053903A
KT	Rebuilding Kit - ZF4HP24A with Transfer Case	89-99	053752D	053753D	053804	053905LS	053905
KT	Rebuilding Kit - ZF4HP24A without Transfer Case	89-99	053752E	053753E	053804	053905ALS	053905A

MISCELLANEOUS GASKETS & KIT COMPONENTS

ILL	ALTO No.	REF No.	Description	Spec	Year	Qty	Notes
1F	053816A	0750-112-033	Gasket, Oil Pan	M.Rubber	83-99	1	
2F	TBA	0734-313-110	O Ring, Filter		83-99	1	
N I	053315	0736-101-105	Bolt, F Clutch drum to case	M6 x 15	83-99	10	

FRICTION CLUTCHES

ILL	ALTO No.	REF No.	Description	Spec	Year	Qty	Notes
10A	053700	1043-202-183	A Clutch - ZF4HP22	.061/1.55	83-99	4-5	HEG - 34T - OD: 3.931" - SM
10A	053706SM	1043-202-189	A Clutch - ZF4HP24	.061/1.55	87-99	4-5	HEG - 40T - OD: 5.042" - SM
10A	053700K	NA	A Clutch - PowerPack® Comp.	.061/1.55	83-99	AR	ZF4HP22 - KEVLAR®
11B	053702	1043-202-041	B Clutch	.059/1.5	83-99	4-5	Tan - 24T - OD: 5.629" - PL
11B	053702A155	NA	B Clutch	.061/1.55	83-99	4-5	HEG - 24T - OD: 5.629" - PL
12C	053702	1043-202-041	C Clutch (Center Support Front) - ZF4HP22	.059/1.5	83-99	2	Tan - 24T - OD: 5.629" - PL
12C	053702A155	NA	C Clutch (Center Support Front) - ZF4HP22	.061/1.55	83-99	2	HEG - 24T - OD: 5.629" - PL
12C	053704	1043-217-009	C Clutch (Center Support Front) - ZF4HP24	.062/1.55	87-99	5	HEG - 48T - OD: 5.629" - PL
13C	053704	1043-217-009	D Clutch (Center Support Rear) - ZF4HP22	.062/1.55	83-99	4-5	HEG - 48T - OD: 5.629" - PL
13C	053714	1043-217-015	D Clutch (Center Support Rear) - ZF4HP24	.062/1.55	87-99	4-5	HEG - 58T - OD: 5.629" - PL
14E	053706	1043-230-009	E Clutch	.062/1.55	83-99	4	HEG - 40T - OD: 5.042" - PL
15F	053706	1043-230-009	F Clutch	.062/1.55	83-99	4	HEG - 40T - OD: 5.042" - PL
15F	053706-225	NA	F Clutch - PowerPack® Component	.088/2.25	83-99	AR	HEG - Use only w/ 053705 steel
N I	053716	NA	Transfer Case (AUDI)	.062/1.55	89-94	6	HEG - 18T - OD: 4.680" - PL

STEEL CLUTCHES

ILL	ALTO No.	REF No.	Description	Spec	Year	Qty	Notes
16A	053701	1043-302-046	A Clutch - ZF4HP22	.071/1.8	83-99	5-6	24T - ID: 3.000"
16A	053701-120	1043-302-123	A Clutch - ZF4HP22 selective	.047/1.2	83-99	AR	24T - ID: 3.000"
16A	053711	NA	A Clutch - ZF4HP22 PowerPack® Comp	.060/1.5	83-99	AR	24T - ID: 3.000"
16A	053707	1043-330-022	A Clutch - ZF4HP24	.083/2.1	87-99	4-6	24T - ID: 4.213"
17A	053721	1043-302-001	A Clutch - ZF4HP22 wave	.040/1.0	83-99	2	24T - ID: 3.000"
17A	053707W140	1043-330-140	A Clutch - ZF4HP24 wave	.055/1.4	87-99	2	24T - ID: 4.213"
18B	053703	0301-302-037	B Clutch - 4HP22H (Ford, Volvo, Peugeot)	.071/1.8	83-99	3-4	12T - ID: 4.690"
18B	053703-210	1043-302-021	B Clutch - 4HP22E,H (BMW, Rover, Jaguar)	.082/2.1	83-99	4	12T - ID: 4.690"
18B	053703-120	0301-317-013	B Clutch - 4HP22 selective	.047/1.2	83-99	AR	12T - ID: 4.690"
18B	053703-400	24231-217-334	B Clutch - 4HP22 selective	.158/4.0	83-99	AR	12T - ID: 4.690"
18B	053703-210	1043-302-021	B Clutch - 4HP24	.082/2.1	87-99	4-5	12T - ID: 4.690"
19C	053703	0301-302-037	C Clutch - 4HP22	.071/1.8	83-99	2	12T - ID: 4.690"
19C	053703-120	0301-317-013	C Clutch - 4HP22 selective	.047/1.2	83-99	AR	12T - ID: 4.690"
19C	053703-400	24231-217-334	C Clutch - 4HP22 selective	.158/4.0	83-99	AR	12T - ID: 4.690"
19C	053703-210	1043-302-021	C Clutch - 4HP24	.082/2.1	87-99	1	12T - ID: 4.690"
19C	053703	0301-302-037	C Clutch - 4HP24	.071/1.8	87-99	1	12T - ID: 4.690"
20C	053703	0301-302-037	D Clutch - 4HP22	.071/1.8	83-99	3-4	12T - ID: 4.690"
21C	053703-120	0301-317-013	D Clutch - 4HP22 selective	.047/1.2	83-99	AR	12T - ID: 4.690"
21C	053703-150	1043-302-020	D Clutch - 4HP22 selective	.060/1.5	83-99	AR	12T - ID: 4.690"
21C	053703-400	24231-217-334	D Clutch - 4HP22 selective	.158/4.0	83-99	AR	12T - ID: 4.690"

Z F

ZF4HP22 1983-99
ZF4HP24, ZF4HP24A 1983-99

STEEL CLUTCHES

ILL	ALTO No.	REF No.	Description	Spec	Year	Qty	Notes
20C	053713	1043-317-040	D Clutch - 4HP24	.047/1.2	87-99	5-6	12T - ID: 4.810"
21C	053713-150	1043-317-061	D Clutch - 4HP24 selective	.060/1.5	87-99	AR	12T - ID: 4.810"
21C	053713-180	1043-317-062	D Clutch - 4HP24 selective	.071/1.8	87-99	AR	12T - ID: 4.810"
21C	053713-210	1043-317-063	D Clutch - 4HP24 selective	.082/2.1	87-99	AR	12T - ID: 4.810"
22E	053705	1043-330-021	E Clutch	.059/1.5	83-99	4	24T - ID: 4.213"
23F	053707	1043-330-022	F Clutch	.082/2.1	83-99	4	24T - ID: 4.213"
N I	053717	NA	Transfer Case (AUDI)	.082/2.1	89-94	6	12T - ID: 2.444"
N I	053765J	NA	Transfer Case (AUDI) - holes in teeth	.082/2.1	89-94	1	Bottom plate

OEI® Original Equipment Improvements

ILL	ALTO No.	REF No.	Description	Spec	Year	Qty	Notes
KT	053755	NA	PowerPack® - "A" Clutch		83-99	1	ZF4HP22 only
KT	053758	NA	DrumSaver® - "E" Clutch		83-99	1	

FILTERS

ILL	ALTO No.	REF No.	Description	Spec	Year	Qty	Notes
30F	053942	1043-226-034	Filter - without Tube		83-99	1	
30F	053944	1043-226-036	Filter - with 1" Tube		85-99	1	
30F	053945	1043-226-037	Filter - Range Rover		88-99	1	
30F	053946	1043-228-041	Filter - Porsche		93-99	1	
30F	053947	1043-226-035	Filter - Audi 4wd (Quattro)		93-99	1	

METAL CLAD SEALS

ILL	ALTO No.	REF No.	Description	Spec	Year	Qty	Notes
31A	053400	0750-111-254	Front Pump		83-99	1	
N I	053410	0750-110-062	Manual Lever		83-99	1	
32F	053405A	0750-111-204	Extension Housing except Below	58mm	83-99	1	
32F	053406	0501-308-540	Extension Housing - Ford	69mm	84-86	1	
32F	053407	0750-111-117	Extension Housing - Range Rover	61.9mm	88-99	1	
32F	053408	0750-111-308	Extension Housing - Land Rover	70mm	88-99	1	

SEALING RINGS

ILL	ALTO No.	REF No.	Description	Spec	Year	Qty	Notes
KT	053601	G715	Sealing Ring Kit - 11M		83-99	1	
40A	053102	0750-113-019	Input Shaft	25mm	83-99	2	
41D	053103	0750-113-021	Sun Gear	35mm	83-99	2	
42B	053104	0750-113-003	Direct Drum	43mm	83-99	1	
43D	053105	0750-513-272	Rear Planet		83-99	1	
44F	053106	0750-113-026	E Clutch drum to F Clutch drum	52mm	83-99	2	
45F	053051	0501-306-311	Governor (F Drum)	Viton®	83-99	1-3	
45F	053101A	0750-113-005	Governor (F Drum)	Metal	83-99	1-3	

HARD PARTS

ILL	ALTO No.	REF No.	Description	Spec	Year	Qty	Notes
N I	183320	BW-SP-4	Sprag, Torque Converter- 4HP24	18 element	83-99	1	

Z F

ZF5HP18 1991-On

A5S 360

KITS

*Add Suffix SK for Super Kit

ILL	Description	Years	Friction Module	Steel Module	Overhaul Kit	Banner Kit	Master Kit
KT	Rebuilding Kit - with Molded Pistons	91-On	104752A	104753A	104804	104905LS	104905
KT	Rebuilding Kit - without Molded Pistons	91-On	104752A	104753A	104804A	104905XLS	104905X

MISCELLANEOUS GASKETS & KIT COMPONENTS

ILL	ALTO No.	REF No.	Description	Spec	Year	Qty	Notes
N I	104818	1056-301-010	Gasket, Oil Pan	M.Rubber	91-On	1	

FRICTION CLUTCHES

ILL	ALTO No.	REF No.	Description	Spec	Year	Qty	Notes
N I	104702-160	1050-202-002	A Clutch (Forward)	.063/1.6	91-On	4-5	HEG - 30T - OD: 5.778" - PL
N I	104702-200	1056-272-024	B Clutch (Direct)	.079/2.0	91-On	2-3	HEG - 30T - OD: 5.778" - PL
N I	053704	1056-210-053	C Clutch (Intermediate / Overrun)	.063/1.6	91-On	3-4	HEG - 48T - OD: 5.625" - PL
N I	104702-160	1050-217-002	D Clutch (Front)	.063/1.6	91-On	4-6	HEG - 30T - OD: 5.778" - PL
N I	103702-155	1056-277-036	D Clutch (Rear)	.061/1.55	91-On	3-4	HEG - 30T - OD: 5.778" - PL
N I	104700	1050-230-033	E Clutch (Input)	.063/1.6	91-On	4-5	HEG - 36T - OD: 4.250" - PL
N I	103702-155	1056-277-036	F Clutch (5th)	.061/1.55	91-On	4-5	HEG - 30T - OD: 5.778" - PL

STEEL CLUTCHES

ILL	ALTO No.	REF No.	Description	Spec	Year	Qty	Notes
N I	104703	1050-302-011	A Clutch (Forward)	.071/1.8	91-On	4-5	24T - ID: 5.204"
N I	104703W100	1056-370-009	A Clutch (Forward) - wave	.040/1.0	91-On	1	24T - ID: 5.204"
N I	104703	1050-302-011	B Clutch (Direct)	.071/1.8	91-On	2-3	24T - ID: 5.204"
N I	053703-210	1043-302-021	C Clutch (Intermediate / Overrun)	.082/2.1	91-On	2-4	12T - ID: 4.690"
N I	053703-300	1043-202-092	C Clutch (Intermediate / Overrun)	.118/3.0	91-On	1	12T - ID: 4.690"
N I	104703	1050-302-011	D Clutch (Front)	.071/1.8	91-On	5-6	24T - ID: 5.204"
N I	103703	1056-277-036	D Clutch (Rear)	.071/1.8	91-On	3-4	24T - ID: 4.730"
N I	104701	1050-330-017	E Clutch (Input)	.071/1.8	91-On	4-5	30T - ID: 3.079"
N I	103703-300	1056-377-045	F Clutch (5th)	.118/3.0	91-On	5-6	24T - ID: 4.730"

PRESSURE PLATES

ILL	ALTO No.	REF No.	Description	Spec	Year	Qty	Notes
N I	TBA	1050-302-013	A Clutch - Top	.178/4.5	91-On	1	
N I	TBA	1050-302-013	B Clutch - Top	.178/4.5	91-On	1	
N I	TBA	0301-302-004	C Clutch - Top	.178/4.5	91-On	1	
N I	TBA	1050-302-013	D Clutch (Front) - Top	.178/4.5	91-On	1	
N I	TBA	1056-377-046	D Clutch (Rear) - Top		91-On	1	
N I	104701-350	1056-330-002	E Clutch - Top	.138/3.5	91-On	1	

BANDS

ILL	ALTO No.	REF No.	Description	Spec	Year	Qty	Notes
N I	104951	0501-208-847	Brake	Tan	91-On	1	

FILTERS

ILL	ALTO No.	REF No.	Description	Spec	Year	Qty	Notes
N I	104944	0501-005-185	Filter		91-On	1	

Z F

ZF5HP18 1991-On

A5S 360

METAL CLAD SEALS

ILL	ALTO No.	REF No.	Description	Spec	Year	Qty	Notes
N I	053400	0750-111-254	Front Pump		91-On	1	
N I	104405	0750-111-253	Extension Housing		91-On	1	
N I	053410	0634-300-040	Manual Lever	22mm	91-On	1	

SEALING RINGS

ILL	ALTO No.	REF No.	Description	Spec	Year	Qty	Notes
KT	104601	5HP18MPSR	Sealing Ring Kit		91-On	1	

Z F

ZF5HP19 (BMW) 1997-On, ZF5HP19FL, FLA (AUDI 01V) 1995-On ZF5HP19HL (Porsche) 1998-On

KITS

*Add Suffix SK for Super Kit

ILL	Description	Years	Friction Module	Steel Module	Overhaul Kit	Banner Kit	Master Kit
KT	Rebuilding Kit-Front Wheel Drive 5HP19FL with Molded Pistons	95-On	139752	139753	139800	139901ALS	139901A
KT	Rebuilding Kit-Front Wheel Drive 5HP19FL without Molded Pistons	95-On	139752	139753	139800X	139901AXLS	139901AX
KT	Rebuilding Kit-Rear Wheel Drive (2WD) 5HP19 with Molded Pistons	95-On	139752	139753A	139800	139901ALS	139901B
KT	Rebuilding Kit-Rear Wheel Drive (2WD) 5HP19 without Molded Pistons	95-On	139752	139753A	139800X	139901AXLS	139901BX
KT	Rebuilding Kit-All Wheel Drive (4WD) 5HP19FLA with Molded Pistons	95-On	139752A	139753B	139800	139901CLS	139901C
KT	Rebuilding Kit-All Wheel Drive (4WD) 5HP19FLA without Molded Pistons	95-On	139752A	139753B	139800X	139901CXLS	139901CX

MISCELLANEOUS GASKETS & KIT COMPONENTS

ILL	ALTO No.	REF No.	Description	Spec	Year	Qty	Notes
N I	139816	1056-303-031	Gasket, Oil Pan		95-On	1	

FRICTION CLUTCHES

ILL	ALTO No.	REF No.	Description	Spec	Year	Qty	Notes
N I	104702-160	1050-217-002	A Clutch	.063/1.6	95-On	4-5	HEG - 30T - OD: 5.778" - PL
N I	139702-200	1060-272-003	B Clutch	.079/2.0	95-On	2	Tan - 30T - OD: 6.097" - PL
N I	139704-155	1019-273-019	C Clutch	.061/1.55	95-On	4-5	HEG - 40T - OD: 6.635" - PL
N I	104702-160	1050-217-002	D Clutch (Center Support - Front)	.063/1.6	95-On	5-6	HEG - 30T - OD: 5.778" - PL
N I	103702-155	1056-277-036	G Clutch (Center Support - Rear)	.061/1.55	95-On	3-5	HEG - 30T - OD: 5.778" - PL
N I	104700	1050-230-033	E Clutch	.063/1.6	95-On	4-5	HEG - 36T - OD: 4.250" - PL
N I	103702-155	1056-277-036	F Clutch	.061/1.55	95-On	4-5	HEG - 30T - OD: 5.778" - PL

STEEL CLUTCHES

ILL	ALTO No.	REF No.	Description	Spec	Year	Qty	Notes
N I	104703	1050-302-011	A Clutch (thin)	.071/1.8	95-On	4-5	24T - ID: 5.204"
N I	104703W100	1056-370-009	A Clutch - wave	.040/1.0	95-On	1	24T - ID: 5.204"
N I	139703-180	1060-372-002	B Clutch (thick)	.071/1.8	95-On	2	24T - ID: 5.204"
N I	139705-180	1019-373-023	C Clutch	.071/1.8	95-On	4-5	24T - ID: 5.740"
N I	139705-210	NA	C Clutch - selective	.082/2.1	95-On	AR	24T - ID: 5.740"
N I	139705-240	1060-310-053	C Clutch - selective	.094/2.4	95-On	AR	24T - ID: 5.740"
N I	139705-300	NA	C Clutch - selective	.118/3.0	95-On	AR	24T - ID: 5.740"
N I	104703	1050-302-011	D Clutch (Center Support - Front)	.071/1.8	95-On	5-6	24T - ID: 5.204"
N I	103703	1056-277-036	G Clutch (Center Support - Rear)	.071/1.8	95-On	3-4	24T - ID: 4.730"
N I	104701	1050-330-017	E Clutch	.071/1.8	95-On	4-5	30T - ID: 3.079"
N I	103703-300	1056-377-045	F Clutch (5th)	.118/3.0	95-On	5-6	24T - ID: 4.730"

TORQUE CONVERTER-FRICTION RINGS AND CLUTCHES

ILL	ALTO No.	REF No.	Description	Spec	Year	Qty	Notes
N I	139714A	NA	Torque Converter	.122/3.1	95-On	AR	HEG- 24T - ID: 8.379"
N I	139714A350	NA	Torque Converter	.138/3.5	95-On	AR	HEG- 24T - ID: 8.379"

PRESSURE PLATES

ILL	ALTO No.	REF No.	Description	Spec	Year	Qty	Notes
N I	139705-330	NA	C Clutch - Top	.130/3.3	95-On	AR	
N I	TBA	1050-302-013	A Clutch - Top	.178/4.5	95-On	1	
N I	TBA	1060-372-003	B Clutch - Top		95-On	1	
N I	139705-390	1019-373-029	C Clutch - Top	.153/3.9	95-On	AR	

Z F

ZF5HP19 (BMW) 1997-On, ZF5HP19FL, FLA (AUDI 01V) 1995-On ZF5HP19HL (Porsche) 1998-On

PRESSURE PLATES

ILL	ALTO No.	REF No.	Description	Spec	Year	Qty	Notes
N I	TBA	1050-302-013	D Clutch (Center Support - Front) - Top	.178/4.5	95-On	1	
N I	TBA	1056-377-046	G Clutch (Center Support - Rear) - Top		95-On	1	
N I	TBA	1056-371-043	E Clutch - Top		95-On	1	

FILTERS

ILL	ALTO No.	REF No.	Description	Spec	Year	Qty	Notes
N I	139940	0501-210-388	Filter - ZF5HP19HL (Porsche) Shallow Pan		98-On	1	
N I	139942	0501-209-251	Filter - ZF5HP19FL, FLA Deep Pan		95-On	1	

METAL CLAD SEALS

ILL	ALTO No.	REF No.	Description	Spec	Year	Qty	Notes
N I	104400	0734-310-316	Front Pump	58mm	95-On	1	
N I	139410	0734-319-524	Manual Lever		95-On	1	
N I	TBA	0734-319-419	Left Axle - ZF5HP19FL, FLA	80mm	95-On	1	
N I	TBA	0750-111-369	Left Axle - ZF5HP19HL	55mm	98-On	1	
N I	TBA	0734-310-342	Right Axle - ZF5HP19FL, FLA	90mm	95-On	1	
N I	TBA	0734-319-419	Right Axle - ZF5HP19HL	80mm	98-On	1	

SEALING RINGS

ILL	ALTO No.	REF No.	Description	Spec	Year	Qty	Notes
N I	139600	NA	Sealing Ring Kit		95-On	1	

BUSHINGS

ILL	ALTO No.	REF No.	Description	Spec	Year	Qty	Notes
N I	139625	NA	Bushing Kit	Bronze	95-On	1	

MOLDED PISTONS

ILL	ALTO No.	REF No.	Description	Spec	Year	Qty	Notes
N I	132330	0501-208-317	F Clutch Drum		95-On	1	

HARD PARTS

ILL	ALTO No.	REF No.	Description	Spec	Year	Qty	Notes
N I	139350	NA	Oil Pump ZF 5HP19 Audi (OE)		95-On	1	OE
N I	139350X	NA	Oil Pump ZF 5HP19 Audi (Aftermarket)		95-On	1	Aftermarket
N I	139351X	NA	Oil Pump ZF 5HP19 BMW (Aftermarket)		95-On	1	Aftermarket
N I	139352	1056-373-032	Reverse Drum-BMW		95-On	1	
N I	139353	1060-203-002	Oil Pan 5HP19FL/FLA		95-On	1	
N I		01V321359A					
N I	183320	BW-SP-4	Sprag, Torque Converter	18 element	95-On	1	

ZF

ZF5HP24 (BMW / JAGUAR) 1995-On
ZF5HP24A (AUDI V8 - O1L) 1997-On

KITS

*Add Suffix SK for Super Kit

ILL	Description	Years	Friction Module	Steel Module	Overhaul Kit	Banner Kit	Master Kit
KT	Rebuilding Kit - with Molded Pistons	95-On	132752	132753	132800	132901LS	132901
KT	Rebuilding Kit - without Molded Pistons	95-On	132752	132753	132800X	132901XLS	132901X

MISCELLANEOUS GASKETS & KIT COMPONENTS

ILL	ALTO No.	REF No.	Description	Spec	Year	Qty	Notes
N I	132816	0501-314-899	Gasket, Oil Pan - BMW/Jaguar		95-On	1	24111-142-676
N I	132818	1058-303-015	Gasket, Oil Pan - Audi		97-On	1	
N I	053315	0736-101-105	Bolt, Front Pump Stator to Body		95-On	5	

FRICTION CLUTCHES

ILL	ALTO No.	REF No.	Description	Spec	Year	Qty	Notes
N I	053706	1058-270-020	A Clutch	.061/1.55	95-On	6	HEG - 40T - OD: 5.042" - PL
N I	132702	1058-270-029	B Clutch	.061/1.55	95-On	6	HEG - 30T - OD: 7.025" - PL
N I	053706	1058-270-020	C Clutch	.061/1.55	95-On	4	HEG - 40T - OD: 5.042" - PL
N I	132702	1058-270-029	D Clutch	.061/1.55	95-On	6	HEG - 30T - OD: 7.025" - PL
N I	132702	1058-270-029	E Clutch	.061/1.55	95-On	5	HEG - 30T - OD: 7.025" - PL
N I	113700A	1055-270-072	F Clutch	.061/1.55	95-On	6	HEG - 30T - OD: 5.627" - SB

STEEL CLUTCHES

ILL	ALTO No.	REF No.	Description	Spec	Year	Qty	Notes
N I	132701	1058-370-066	A Clutch	.082/2.1	95-On	6	24T - ID: 4.212"
N I	132703	1058-370-073	B Clutch	.118/3.0	95-On	6	30T - ID: 6.100"
N I	132701	1058-370-066	C Clutch	.082/2.1	95-On	4	24T - ID: 4.212"
N I	132703	1058-370-073	D Clutch	.118/3.0	95-On	4	30T - ID: 6.100"
N I	132703	1058-370-073	E Clutch	.118/3.0	95-On	5	30T - ID: 6.100"
N I	132703-210	1058-370-070	B, D, E Clutch - selective	.082/2.1	95-On	AR	30T - ID: 6.100"
N I	132703-240	1058-370-071	B, D, E Clutch - selective	.094/2.4	95-On	AR	30T - ID: 6.100"
N I	113701-180	1055-374-030	F Clutch	.071/1.8	95-On	6	24T - ID: 4.685"

TORQUE CONVERTER - FRICTION RINGS AND CLUTCHES

ILL	ALTO No.	REF No.	Description	Spec	Year	Qty	Notes
N I	132714	FS-CP-3	Friction - Torque Converter	.120/3.04	95-On	AR	Tan - 24T - ID: 8.379" - SM
N I	132714A	FS-CP-3	Friction - Torque Converter	.120/3.04	95-On	AR	Red - 24T - ID: 8.379" - SM
N I	132714-386	FS-CP-3	Friction - Torque Converter	.152/3.86	95-On	AR	Tan - 24T - ID: 8.379" - SM

PRESSURE PLATES

ILL	ALTO No.	REF No.	Description	Spec	Year	Qty	Notes
N I	TBA	1058-370-057	A Clutch - Top		95-On	1	
N I	TBA	1058-370-076	B Clutch - Top	.154/3.9	95-On	1	
N I	TBA	1058-370-067	C Clutch - Top		95-On	1	
N I	TBA	1058-370-076	D Clutch - Top	.154/3.9	95-On	1	
N I	TBA	1058-370-076	E Clutch - Top	.154/3.9	95-On	1	
N I	TBA	1055-376-054	F Clutch - Top		95-On	1	

FILTERS

ILL	ALTO No.	REF No.	Description	Spec	Year	Qty	Notes
N I	132940	0501-004-925	Filter - BMW/Jaguar		95-On	1	24341-422-673
N I	132940A	0501-005-998	Filter - Audi		97-On	1	

ZF

ZF5HP24 (BMW / JAGUAR) 1995-On
ZF5HP24A (AUDI V8 - O1L) 1997-On

METAL CLAD SEALS

ILL	ALTO No.	REF No.	Description	Spec	Year	Qty	Notes
N I	053400	0750-111-254	Front Pump		95-On	1	
N I	053410	0750-110-062	Manual Lever	18mm	95-On	1	
N I	113405	0750-111-243	Extension Housing	73mm	95-On	1	24131-422-667
N I	132425	0734-319-419	Left Axle - Audi	80mm	97-On	1	
N I	132426	0734-310-342	Right Axle - Audi	90mm	97-On	1	
N I	132427	0734-319-509	Rear Axle output	52mm	97-On	1	
N I	132401	0734-319-547	Transfer Case	67mm	97-On	1	

SEALING RINGS

ILL	ALTO No.	REF No.	Description	Spec	Year	Qty	Notes
KT	132600	NA	Sealing Ring Kit		95-On	1	

PISTONS

ILL	ALTO No.	REF No.	Description	Spec	Year	Qty	Notes
N I	132330	0501-208-317	F Clutch Drum		95-On	1	

HARD PARTS

ILL	ALTO No.	REF No.	Description	Spec	Year	Qty	Notes
KT	132351	NA	Direct Drum with Shaft		95-On	1	

Z F

ZF5HP30 1993-On

A5S 560

KITS

*Add Suffix SK for Super Kit

ILL	Description	Years	Friction Module	Steel Module	Overhaul Kit	Banner Kit	Master Kit
KT	Rebuilding Kit - with molded Pistons	93-On	113752	113753	113800	113901LS	113901
KT	Rebuilding Kit - without molded Pistons	93-On	113752	113753	113800A	113901BLS	113901B

STEEL CLUTCHES

ILL	ALTO No.	REF No.	Description	Spec	Year	Qty	Notes
N I	113816	0750-112-155	Gasket, Oil Pan	M.Rubber	93-On	1	
N I	113701-300	1055-370-089	A Clutch (Forward)	.118/3.0	93-On	5	24T - ID: 4.690"
N I	113701W080	1055-376-052	A Clutch (Forward) - wave	.032/.8	93-On	1	24T - ID: 5.905"
N I	113703	1055-371-003	B Clutch (Direct)	.118/3.0	93-On	6-7	32T - ID: 7.170"
N I	113703	1055-371-003	C Clutch (Intermediate)	.118/3.0	93-On	3	32T - ID: 7.170"
N I	113703	1055-371-003	D Clutch (Center Support Front)	.118/3.0	93-On	5-6	32T - ID: 7.170"
N I	113701-180	1055-374-024	E Clutch (Center Support Rear)	.071/1.8	93-On	5	24T - ID: 4.690"
N I	113701W080	1055-376-052	E Clutch (Center Support Rear) - wave	.032/.8	93-On	1	24T - ID: 5.905"
N I	113701-180	1055-374-024	F Clutch (Overdrive)	.071/1.8	93-On	6	24T - ID: 4.690"
N I	113701W080	1055-376-052	F Clutch (Overdrive) - wave	.032/.8	93-On	1	24T - ID: 5.905"

MISCELLANEOUS GASKETS & KIT COMPONENTS

ILL	ALTO No.	REF No.	Description	Spec	Year	Qty	Notes
N I	053315	0736-401-054	Bolt, F Clutch drum to case	M8 x 15	93-On	12	

FRICTION CLUTCHES

ILL	ALTO No.	REF No.	Description	Spec	Year	Qty	Notes
N I	113700	1055-270-030	A Clutch (Forward)	.062/1.6	93-On	5	HEG - 30T - OD: 5.627" - PL
N I	113702	1055-271-025	B Clutch (Direct)	.062/1.6	93-On	5-6	HEG - 30T - OD: 8.007" - PL
N I	113702	1055-271-025	C Clutch (Intermediate)	.062/1.6	93-On	3	HEG - 30T - OD: 8.007" - PL
N I	113702	1055-271-025	D Clutch (Center Support Front)	.062/1.6	93-On	5	HEG - 30T - OD: 8.007" - PL
N I	113700	1055-270-030	E Clutch (Center Support Rear)	.062/1.6	93-On	5-6	HEG - 30T - OD: 5.627" - PL
N I	113700	1055-270-030	F Clutch (Overdrive)	.062/1.6	93-On	6	HEG - 30T - OD: 5.627" - PL

TORQUE CONVERTER-FRICTION RINGS AND CLUTCHES

ILL	ALTO No.	REF No.	Description	Spec	Year	Qty	Notes
N I	113714	FS-CP-1	Torque Converter	.118/3.0	93-On	AR	Red - 24T - ID: 9.354" - SM
N I	113714C300	FS-CP-4C	Torque Converter	.118/3.0	93-On	AR	HEG - 24T - ID: 9.354" - SM
N I	113714-450	FS-CP-1C	Torque Converter	.177/4.5	93-On	AR	HEG - 24T - ID: 9.354" - SM

PRESSURE PLATES

ILL	ALTO No.	REF No.	Description	Spec	Year	Qty	Notes
N I	TBA	1055-370-090	A Clutch - Top		93-On	1	
N I	TBA	1055-370-047	C Clutch - Top		93-On	1	
N I	113701-300	1055-370-089	E Clutch (Center Support Rear)	.118/3.0	93-On	1	
N I	TBA	1055-376-052	F Clutch - Top		93-On	1	

FILTERS

ILL	ALTO No.	REF No.	Description	Spec	Year	Qty	Notes
N I	113940	0501-005-184	Filter		93-On	1	24341-422-229

Z F

ZF5HP30 1993-On

A5S 560

METAL CLAD SEALS

ILL	ALTO No.	REF No.	Description	Spec	Year	Qty	Notes
N I	053400	0750-111-254	Front Pump	58mm	93-On	1	24311-422-671
N I	113405	0750-111-243	Extension Housing	73mm	93-On	1	24311-422-667
N I	053410	0750-110-062	Manual Lever	18mm	93-On	1	24521-207-430

SEALING RINGS

ILL	ALTO No.	REF No.	Description	Spec	Year	Qty	Notes
KT	113600	NA	Sealing Ring Kit		93-On	1	

MOLDED PISTONS

ILL	ALTO No.	REF No.	Description	Spec	Year	Qty	Notes
KT	113670	NA	Piston Kit		93-On	1	3 pistons
N I	113332	0750-132-082	D Clutch (Low/Reverse)		93-On	1	
N I	113330	0750-132-086	E Clutch (Center Support Rear)		93-On	1	
N I	113331	0750-132-072	F Clutch (Overdrive)		93-On	1	

ZF

ZF6HP19/19X BMW 2004-On, ZF6HP19A AUDI/VW 2002 ZF6HP21/X 2007-On

KITS

*Add Suffix SK for Super Kit

ILL	Description	Years	Friction Module	Steel Module	Overhaul Kit	Banner Kit	Master Kit
KT	Rebuilding Kit 6HP19A VW/AUDI AWD - Without Pistons	02-On	143752A	143753A	143802X	143901AXLS	143901AX
KT	Rebuilding Kit 6HP19/19X, 6HP21/21X BMW 2WD/4WD - Without Pistons	04-On	143752	143753	143800X	143901XLS	143901X

MISCELLANEOUS GASKETS & KIT COMPONENTS

ILL	ALTO No.	REF No.	Description	Spec	Year	Qty	Notes
N I	183001	1068-327-179	Valve Body - Bonded Plate		02-On	1	
N I	183002	1068-327-224	Valve Body - Bonded Plate		02-On	1	
N I	183003	1068-327-180	Valve Body - Bonded Plate		02-On	1	

FRICTION CLUTCHES

ILL	ALTO No.	REF No.	Description	Spec	Year	Qty	Notes
N I	143700-163	NA	A Clutch	.063/1.6	02-On	4	HEG - 30T - OD: 6.650" - PLNI
N I	143700-216	NA	B Clutch	.085/2.16	02-On	5-6	HEG - 30T - OD: 6.650" - PLNI
N I	143702-160	NA	C Clutch	.063/1.60	02-On	4	HEG - 24T - OD: 6.100" - PLNI
N I	143704-157	NA	D Clutch	.062/1.57	02-On	5	HEG - 30T - OD: 5.940" - PLNI
N I	143706-160	NA	E Clutch	.063/1.60	02-On	4-6	HEG - 30T - OD: 4.880" - PLNI
N I	143706A160	NA	E Clutch (AUDI)	.063/1.60	02-On	4-6	SAS - 30T - OD: 4.880" - SEG

STEEL CLUTCHES

ILL	ALTO No.	REF No.	Description	Spec	Year	Qty	Notes
N I	143701-300	NA	A Clutch	.118/3.00	02-On	5	30T - ID: 6.050"
N I	143701-240	NA	B Clutch	.094/2.40	02-On	5	30T - ID: 6.050"
N I	143703-250	NA	C Clutch	.098/2.50	02-On	4	24T - ID: 4.680"
N I	143705-180	NA	D Clutch	.071/1.80	02-On	5	24T - ID: 5.080"
N I	143707-208	NA	E Clutch	.082/2.08	04-On	4	24T - ID: 3.820"
N I	143707-157	NA	E Clutch (6HP19A)	.062/1.57	02-On	6	24T - ID: 3.820"

TORQUE CONVERTER - FRICTION RINGS AND CLUTCHES

ILL	ALTO No.	REF No.	Description	Spec	Year	Qty	Notes
N I	183716	ZF-CP-4	Torque converter (external spline)	.140/3.56	02-On	2	HEG - 24T - ID: 6.300"
N I	183715	ZF-CP-7	St Torque converter (internal spline)	.108/2.74	02-On	1	24T - OD: 7.570" - grooved
N I	183724	ZF-CP-1	FR Torque Converter (external spline)	.145/3.68	02-On	1	24T - ID : 6.300"
N I	143714	FS-CP-7BW	Friction Torque converter (External Spline)	.159/4.04	02-On	1	24T - ID: 7.875"
N I	143716	NA	Friction Torque converter (Internal Spline) - ZF6HP21	.140/3.56	07-On	1	OTHER - 24T - OD: 8.350"

FILTERS

ILL	ALTO No.	REF No.	Description	Spec	Year	Qty	Notes
N I	143940	0501-223-001	Filter		02-On	1	
N I	143942	NA	Filter AUDI Q7 2007 - up (9 CM tube)		07-On	1	
N I	143942X	0501-215-790	Filter with Oil Pan 6HP19		02-On	1	
N I		24117-571-217			02-On	1	
N I		24117-536-387			02-On	1	
N I	143944	0501-212-401	Filter (12 CM tube)		02-On	1	
		09I-325-429					

ZF

ZF6HP19/19X BMW 2004-On, ZF6HP19A AUDI/VW 2002 ZF6HP21/X 2007-On

BUSHINGS

ILL	ALTO No.	REF No.	Description	Spec	Year	Qty	Notes
N I	143625	NA	Bushing Kit - 6HP19		02-On	1	Bronze - contains 12 bushings
N I	143625B	NA	Bushing Kit - 6HP19		04-On	1	Bi-Metal - contains 12 bushings
N I	143201X	NA	Front and Rear Stator		02-On	2	Bronze
N I	143202	NA	"A" Clutch Hub		04-On	1	Bi-Metal
N I	143202X	NA	"A" Clutch Hub		02-On	1	Bronze
N I	143203	NA	"A" Clutch Hub		02-On	1	Bi-Metal
N I	143203X	NA	"A" Clutch Hub		02-On	1	Bronze
N I	143204X	NA	"B" Clutch		02-On	1	Bronze
N I	143206	NA	"B" Clutch Drum		02-On	1	Bi-Metal
N I	143206X	NA	"B" Clutch Drum		02-On	1	Bronze
N I	143207	NA	"B" Clutch Drum		02-On	1	Bi-Metal
N I	143207X	NA	"B" Clutch Drum		02-On	1	Bronze
N I	183200	NA	"A" Clutch Drum - Large		02-On	1	Bi-Metal
N I	183200X	NA	"A" Clutch Drum - Large		02-On	1	Bronze
N I	183201	NA	"A" Clutch Drum - Small		02-On	1	Bi-Metal
N I	183201X	NA	"A" Clutch Drum - Small		02-On	1	Bronze
N I	183204	NA	Rear Stator		02-On	1	Bi-Metal
N I	183204X	NA	Rear Stator		02-On	1	Bronze
N I	183206	NA	Pilot		02-On	1	Bi-Metal
N I	183206X	NA	Pilot		02-On	2	Bronze

BEARINGS

ILL	ALTO No.	REF No.	Description	Spec	Year	Qty	Notes
N I	183235	NA	Bearing, Pump Needle Sleeve		02-On	1	

ZF
ZF6HP26
2002-On

KITS

*Add Suffix SK for Super Kit

ILL	Description	Years	Friction Module	Steel Module	Overhaul Kit	Banner Kit	Master Kit
KT	Rebuilding Kit	02-On	183752	183753	183800	183901LS	183901

KITS - SPECIALTY KIT WITH POWERPACK

ILL	Description	Years	Friction and Steel Module	Overhaul Kit	Master Kit
KT	Rebuilding Kit	02-On	183750PWR	183800	183901PWR

MISCELLANEOUS GASKETS & KIT COMPONENTS

ILL	ALTO No.	REF No.	Description	Spec	Year	Qty	Notes
N I	183001	1068-327-179	Valve Body - Bonded Plate		02-On	1	
N I	183003	1068-327-180	Valve Body - Bonded Plate		02-On	1	
N I	183818	NA	Gasket - Oil Pan		02-On	1	Fel-pro
N I	183817	NA	Gasket - Oil Pan GA6HP26Z, GA6HP32Z BMW	M. Rubber	02-On	1	

FRICTION CLUTCHES

ILL	ALTO No.	REF No.	Description	Spec	Year	Qty	Notes
N I	183700-160	1068-277-004	Input (A) Clutch	.063/1.6	02-On	5	HEG - 30T - OD: 7.370" - PLNI
N I	183700A160	NA	A,B,C,D clutch	.063/1.6	02-On	27	G3 BLK - 30T - OD: 7.370" - PLNI
N I	183700-220	1068-277-002	Direct (B) Clutch	.087/2.2	02-On	5	HEG - 30T - OD: 7.370" - PLNI
N I	183700-220	1068-277-002	2nd Brake, 6th Brake (C) Clutch	.087/2.2	02-On	5	HEG - 30T - OD: 7.370" - PLNI
N I	183700-160	1068-277-004	Low & Reverse (D) Clutch	.063/1.6	02-On	7	HEG - 30T - OD: 7.370" - PLNI
N I	183702A160	1068-271-018	Overdrive (E) Clutch	.063/1.6	02-On	7	SAS - 30T - OD: 5.150" - PLNI

STEEL CLUTCHES

ILL	ALTO No.	REF No.	Description	Spec	Year	Qty	Notes
N I	183701-300	1068-377-020	Input (A) Clutch	.118/3.0	02-On	4-5	30T - ID: 6.450"
N I	183701-173	NA	A,B,C,D clutch	.068/1.73	02-On	20	30T - ID: 6.450"
N I	183701-267	1068-377-023	Input (A) Clutch selective	.105/2.7	02-On	1	30T - ID: 6.450"
N I	183701-330	1068-377-024	Input (A) Clutch selective	.129/3.3	02-On	1	30T - ID: 6.450"
N I	183701-360	1068-377-025	Input (A) Clutch selective	.142/3.6	02-On	1	30T - ID: 6.450"
N I	183701-208	1068-377-019	Direct (B) Clutch	.082/2.08	02-On	4-5	30T - ID: 6.450"
N I	183701-300	1068-377-020	2nd Brake, 6th Brake (C) Clutch	.118/3.0	02-On	4-5	30T - ID: 6.450"
N I	183701-208	1068-377-019	Low & Reverse (D) Clutch	.082/2.08	02-On	6-7	30T - ID: 6.450"
N I	183701-240	1068-377-022	Low & Reverse (D) Clutch selective	.095/2.4	02-On	1	30T - ID: 6.450"
N I	183703-160	NA	E clutch	.063/1.6	02-On	8	24T - ID: 4.200"
N I	183703-300	6L2Z-7B442AA	Overdrive (E) clutch	.118/3.0	02-On	4-5	24T - ID: 4.200"
N I	183703-240	NA	Overdrive (E) Clutch (some models)	.095/2.4	02-On	6-7	24T - ID: 4.200"

PRESSURE PLATES

ILL	ALTO No.	REF No.	Description	Spec	Year	Qty	Notes
N I	183701-390	1068-377-021	Direct (B) Clutch Top Plate	.153/3.9	02-On	1	30T - ID: 6.450"
N I	183701-390	1068-377-021	2nd Brake, 6th Brake (C) Clutch Top Plate	.153/3.9	02-On	1	30T - ID: 6.450"

TORQUE CONVERTER - FRICTION RINGS AND CLUTCHES

ILL	ALTO No.	REF No.	Description	Spec	Year	Qty	Notes
N I	183714	FS-CP-56BW	FR Torque Converter (external spline)	.160/4.06	02-On	1	KEV - 24T - ID: 8.200"
N I	183714A	ZF-CP-6	FR Torque Converter (external spline)	.160/4.06	02-On	1	KEV - 24T - ID: 8.725"
N I	183715	ZF-CP-7	ST Torque Converter (internal spline)	.108/2.74	02-On	1	24T - OD: 7.570" - grooved
N I	183716	ZF-CP-4	FR Torque Converter (external spline)	.140/3.56	02-On	2	HEG - 24T - ID: 6.300"
N I	183720	ZF-CP-5	FR Torque Converter (external spline)	.107/2.72	02-On	1	G3BK - 20T - ID: 7.289" - CUP
N I	183722	ZF-CP-2	FR Torque Converter (external spline)	.160/4.06	02-On	1	OTHER - 24T - ID: 8.782"

ZF
ZF6HP26
2002-On

TORQUE CONVERTER - FRICTION RINGS AND CLUTCHES

N I	183724	ZF-CP-1	FR Torque Converter (external spline)	.145/3.68	02-On	1	OTHER - 24T - ID: 6.300"

FILTERS

ILL	ALTO No.	REF No.	Description	Spec	Year	Qty	Notes
N I	183940	0501-321-556	Filter with Plastic Oil Pan - BMW/Jaguar		02-On	1	
N I	183942	0501-223-001	Filter - VW/Audi		02-On	1	
N I	183946	0501-213-359	Filter for Metal Oil Pan		02-On	1	
		24117-543-550					

SNAP RINGS

ILL	ALTO No.	REF No.	Description	Spec	Year	Qty	Notes
N I	183250	NA	Snap Ring		07-On	1	

BUSHINGS

ILL	ALTO No.	REF No.	Description	Spec	Year	Qty	Notes
N I	183625	NA	Bushing Kit		02-On	1	Bronze - contains 15 pistons
N I	183625B	NA	Bushing Kit		02-On	1	Bi-Metal - contains 15 pistons
N I	183201	NA	"A" Clutch Drum - Small		02-On	1	Bi-Metal
N I	183202X	NA	Front Stator		02-On	1	Bronze
N I	183202	NA	Front Stator		02-On	1	Bi-Metal
N I	183203X	NA	"B" Clutch Drum		02-On	1	Bronze
N I	183203	NA	"B" Clutch Drum		02-On	1	Bi-Metal
N I	183204X	NA	Rear Stator		02-On	1	Bronze
N I	183204	NA	Rear Stator 1.145 OD		02-On	1	Bi-Metal
N I	183205X	NA	"A" Clutch Hub - Small		02-On	1	Bronze
N I	183205	NA	"A" Clutch Hub - Small		02-On	1	Bi-Metal
N I	183206X	NA	Pilot		02-On	1	Bronze
N I	183206	NA	Pilot		02-On	1	Bi-Metal
N I	183207X	NA	"A" Clutch Hub - Large		02-On	1	Bronze
N I	183207	NA	"A" Clutch Hub - Large		02-On	1	Bi-Metal
N I	183208X	NA	Rear Stator		02-On	1	Bronze
N I	183208	NA	Rear Stator 1.028 OD		02-On	1	Bi-Metal
N I	183209X	NA	Rear Stator		02-On	1	Bronze
N I	183209	NA	Rear Stator 1.225 OD		02-On	1	Bi-Metal
N I	183210X	NA	"A" Clutch		02-On	1	Bronze
N I	183210	NA	"A" Clutch Drum - Small		02-On	1	Bi-Metal
N I	183200X	NA	"A' Clutch Drum - Large		02-On	1	Bronze
N I	183200	NA	"A" Clutch Drum - Large		02-On	1	Bi-Metal
N I	183201X	NA	"A" Clutch Drum - Small		02-On	1	Bronze

BEARINGS

ILL	ALTO No.	REF No.	Description	Spec	Year	Qty	Notes
N I	183235	NA	Bearing, Pump Needle Sleeve		02-On	1	

HARD PARTS

ILL	ALTO No.	REF No.	Description	Spec	Year	Qty	Notes
N I	183320	BW-SP-4	Sprag, Torque Converter	18 element	02-On	1	

OIL PAN KIT

ILL	ALTO No.	REF No.	Description	Spec	Year	Qty	Notes
N I	183650	NA	Oil Pan Kit - Metal Pan		02-On	1	

ZF

ZF6HP26

2002-On

OIL PAN KIT

ILL	ALTO No.	REF No.	Description	Spec	Year	Qty	Notes
			Bulk export packaging for 183650 Order individual components below				
N I	183350	NA	Metal Oil Pan		02-On	1	
N I	001233	NA	Oil Pan Bolt Pack		02-On	1	21 Bolts- 183550
N I	183818	NA	Gasket - Oil Pan		02-On	1	Fel-pro
N I	183946	0501-213-359	Filter for Metal Oil Pan		02-On	1	

ZF
ZF6HP28
2004-On

KITS

ILL	Description	Years	Friction Module	Steel Module	Overhaul Kit	Banner Kit	Master Kit
KT	Rebuilding Kit	04-On	183752	183753C	183806	183907LS	183907

FRICTION CLUTCHES

ILL	ALTO No.	REF No.	Description	Spec	Year	Qty	Notes
N I	183700-160	1068-277-004	Input - Forward (A) Low/Reverse Direct	.063/1.6	04-On	12	HEG - 30T - OD: 7.370" - PLNI
N I	183700-220	1068-277-002	Direct (B) Clutch	.087/2.2	04-On	10	HEG - 30T - OD: 7.370" - PLNI
N I	183700-220	1068-277-002	2nd Brake, 6th Brake (C) Clutch	.087/2.2	04-On	10	HEG - 30T - OD: 7.370" - PLNI
N I	183702A160	1068-271-018	Overdrive (E) Clutch	.063/1.6	04-On	7	HEG - 30T - OD: 5.150" - PLNI

STEEL CLUTCHES

ILL	ALTO No.	REF No.	Description	Spec	Year	Qty	Notes
N I	183701-208	1068-377-019	Low & Reverse (D) Clutch	.082/2.08	04-On	12	30T - ID: 6.450"
N I	183701-300	1068-377-020	Input (A) Clutch	.118/3.0	04-On	11	30T - ID: 6.450"
N I	183703-300	6L2Z-7B442AA	Overdrive (E) clutch	.118/3.0	04-On	7	24T - ID: 4.200"

FILTERS

ILL	ALTO No.	REF No.	Description	Spec	Year	Qty	Notes
N I	183940	0501-321-556	Filter with Plastic Oil Pan - BMW/Jaguar		04-On	1	

ZF
ZF6HP32
2002-On

KITS

ILL	Description	Years	Friction Module	Steel Module	Overhaul Kit	Banner Kit	Master Kit
KT	Rebuilding Kit	02-On	113752A	113753A	113802	113903LS	113903

MISCELLANEOUS GASKETS & KIT COMPONENTS

ILL	ALTO No.	REF No.	Description	Spec	Year	Qty	Notes
N I	183001	1068-327-179	Valve Body - Bonded Plate		02-On	1	
N I	183003	1068-327-180	Valve Body - Bonded Plate		02-On	1	
N I	183817	NA	Gasket - Oil Pan GA6HP26Z, GA6HP32Z BMW	M. Rubber	02-On	1	

FRICTION CLUTCHES

ILL	ALTO No.	REF No.	Description	Spec	Year	Qty	Notes
N I	113702	1055-271-025	A Clutch	.062/1.6	02-On	5	HEG - 30T - OD: 8.007" - PL
N I	113702-218	NA	B Clutch	.086/2.18	02-On	5	HEG - 30T - OD: 8.007" - PL
N I	113702-218	NA	C Clutch	.086/2.18	02-On	5	HEG - 30T - OD: 8.007" - PL
N I	113702	1055-271-025	D Clutch	.062/1.6	02-On	7	HEG - 30T - OD: 8.007" - PL
N I	113700	1055-270-030	E Clutch	.062/1.6	02-On	6-7	HEG - 30T - OD: 5.627" - PL

STEEL CLUTCHES

ILL	ALTO No.	REF No.	Description	Spec	Year	Qty	Notes
N I	113703	1055-371-003	A Clutch	.118/3.0	02-On	5	32T - ID: 7.170"
N I	113703-208	NA	B Clutch	.082/2.08	02-On	5	32T - ID: 7.170"
N I	113703	1055-371-003	C Clutch	.118/3.0	02-On	5	32T - ID: 7.170"
N I	113703-208	NA	D Clutch	.082/2.08	02-On	7	32T - ID: 7.170"
N I	113701-300	1055-370-089	E Clutch	.118/3.0	02-On	6-7	24T - ID: 4.690"

FILTERS

ILL	ALTO No.	REF No.	Description	Spec	Year	Qty	Notes
N I	183940	0501-321-556	Filter with Plastic Oil Pan		02-On	1	
N I	183946	0501-213-359	Filter for Metal Oil Pan		02-On	1	
		24117-543-550					

OIL PAN KIT

ILL	ALTO No.	REF No.	Description	Spec	Year	Qty	Notes
N I	183650	NA	Oil Pan Kit - Metal Pan		02-On	1	
			Bulk export packaging for 183650 Order individual components below				
N I	183350	NA	Metal Oil Pan		02-On	1	
N I	001233	NA	Oil Pan Bolt Pack		02-On	1	21 Bolts- 183550
N I	183818	NA	Gasket - Oil Pan		02-On	1	Fel-pro
N I	183946	0501-213-359	Filter for Metal Oil Pan		02-On	1	

ZF

ZF8HP45 2010-On
845RE 2012-On / AL450E 2010-On

KITS

ILL	Description	Years	Friction Module	Steel Module	Overhaul Kit	Banner Kit	Master Kit
KT	Rebuilding Kit with Molded Pistons	10-On	215752	215753	215800	215901LS	215901
KT	Rebuilding Kit without Molded Pistons	10-On	215752	215753	215800X	215901XLS	215901X
KT	Rebuilding Kit with Molded Pistons	12-On	215752A	215753A	215800	215901ALS	215901A
KT	Rebuilding Kit without Molded Pistons	12-On	215752A	215753A	215800X	215901AXLS	215901AX

MISCELLANEOUS GASKETS & KIT COMPONENTS

ILL	ALTO No.	REF No.	Description	Spec	Year	Qty	Notes
N I	215614	NA	Seal Kit- Torque Converter Inner/Outer		10-On	1	Contains: 1 D-Ring, 1 Seal and 1 O-Ring
N I	A20027B	NA	D-Ring Torque Converter Outer		10-On	1	
N I	A50003	NA	Seal Torque Converter Inner		10-On	1	
N I	A10133B	NA	O-Ring		10-On	1	

FRICTION CLUTCHES

ILL	ALTO No.	REF No.	Description	Spec	Year	Qty	Notes
N I	215700-157	NA	A Clutch	.062/1.57	10-On	5	24T - OD: 5.109" -
N I	215702-206	NA	B Clutch	.081/2.06	10-On	5	38T - OD: 7.022" -
N I	215704A216	NA	C Clutch- External Spline	.085/2.16	10-On	6	24T - ID: 4.553" -
N I	215706-206	NA	D Clutch	.081/2.06	10-On	4	54T - OD: 5.811" -
N I	215706-216	NA	D Clutch	.081/2.06	10-On	4	54T - OD: 5.811" -
N I	215704A216	NA	E Clutch- External Spline	.085/2.16	10-On	6	24T - ID: 4.553" -

STEEL CLUTCHES

ILL	ALTO No.	REF No.	Description	Spec	Year	Qty	Notes
N I	215701-180	NA	A Clutch	.071/1.80	10-On	5	27T - ID: 4.200"
N I	215703-180	NA	B Clutch	.071/1.80	10-On	5	36T - ID: 6.123"
N I	215705A211	NA	C Clutch- Internal Spline	.083/2.11	10-On	6	24T - OD: 5.460"
N I	215707-180	NA	D Clutch	.083/2.11	10-On	4	24T - ID: 4.951"
N I	215707-211	NA	D Clutch	.083/2.11	10-On	4	24T - ID: 4.951"
N I	215705A211	NA	E Clutch- Internal Spline	.083/2.11	10-On	6	24T - OD: 5.460"

OEI® ORIGINAL EQUIPMENT IMPROVEMENTS

ILL	ALTO No.	REF No.	Description	Spec	Year	Qty	Notes
N I	215758A	NA	Torque Converter PowerPack® - 845RE		10-On	1	
N I	215758B	NA	Torque Converter PowerPack® - 8HP45		10-On	1	
N I	215759	NA	Repair Kit with Seal Kit		10-On	1	

TORQUE CONVERTER - FRICTION RINGS AND CLUTCHES

ILL	ALTO No.	REF No.	Description	Spec	Year	Qty	Notes
N I	215714	ZF-CP-8F	Friction Torque Converter	.096/2.44	10-On	1	80T - OD: 7.766"- SEG
N I	215714-191	NA	Friction Torque Converter PowerPack® Component	.075/1.91	10-On	1	G3B - 80T - OD: 7.766"- SEG
N I	215715-175	ZF-CP-9S	Steel Torque Converter	.069/1.75	10-On	1	30T - ID: 6.498"
N I	215715A175	NA	Steel Torque Converter PowerPack® Clutch Component - Anti-Drag Slots	.069/1.75	10-On	1	30T - ID: 6.498"
N I	215715-277	ZF-CP-10S	Steel Torque Converter	.109/2.77	10-On	1	30T - ID: 6.498"
N I	215765	ZF-CP-11P	Steel Torque Converter Pressure Plate	.168/4.27	10-On	1	30T - ID: 6.498"
N I	215765A	NA	Steel Torque Converter PowerPack® Component .084 Step	.084/2.13	10-On	1	30T - ID: 6.498"
N I	215765B	NA	Steel Torque Converter PowerPack® Component .104 Step	.104/2.64	10-On	1	30T - ID: 6.498"

ZF

ZF8HP45 2010-On
845RE 2012-On / AL450E 2010-On

FILTERS

ILL	ALTO No.	REF No.	Description	Spec	Year	Qty	Notes
N I	215940	24117-604-960	Filter with Oil Pan- 8HP45/75 BMW		10-On	1	
N I	TBA	0501-218-004	Filter - AL450/VW Amarok		10-On	1	Plastic

BUSHINGS

ILL	ALTO No.	REF No.	Description	Spec	Year	Qty	Notes
N I	215625B	NA	Bushing Kit		10-On	1	Bi-Metal
N I	215200	NA	Support		10-On	1	Bi-Metal
N I	215201A	NA	Hub - Front		10-On	1	Bi-Metal
N I	215201B	NA	Hub - Rear		10-On	1	Bi-Metal
N I	215202	NA	#1 Planetary		10-On	1	Bi-Metal
N I	215203A	NA	Sunshell - Front		10-On	1	Bi-Metal
N I	215203B	NA	Sunshell - Rear		10-On	1	Bi-Metal
N I	215204	NA	#4 Planetary		10-On	1	Bi-Metal

PISTONS

ILL	ALTO No.	REF No.	Description	Spec	Year	Qty	Notes
KT	215670	NA	Piston Kit		10-On	1	
N I	215300	NA	B Clutch Piston		10-On	1	
N I	215301	NA	C Clutch Piston		10-On	1	
N I	215302	NA	E Clutch Piston		10-On	1	

ZF
ZF8HP55
2011-On

KITS

ILL	Description	Years	Friction Module	Steel Module	Overhaul Kit	Banner Kit	Master Kit
KT	Rebuilding Kit with Molded Pistons	11-On	216752A	216753A	216802	216903LS	216903
KT	Rebuilding Kit without Molded Pistons	11-On	216752A	216753A	216802X	216903XLS	216903X
KT	Rebuilding Kit without Molded Pistons	11-On	216752A	216753A	216802X	216903XLS	216903X

MISCELLANEOUS GASKETS & KIT COMPONENTS

ILL	ALTO No.	REF No.	Description	Spec	Year	Qty	Notes
N I	215759A	NA	Repair Kit with Seal Kit		11-On		
N I	216816A	NA	Gasket, Oil Pan		11-On		

FRICTION CLUTCHES

ILL	ALTO No.	REF No.	Description	Spec	Year	Qty	Notes
N I	216700-157	NA	A Clutch	.062/1.57	11-On	4	32T - OD: 5.742"
N I	216702-211	NA	B Clutch	.083/2.11	11-On	4	40T - OD: 7.810"
N I	216704A208	NA	C Clutch- External Spline	.082/2.08	11-On	5	32T - ID: 5.342"
N I	216706-211	NA	D Clutch	.083/2.11	11-On	3	63T - OD: 6.773"
N I	216704A208	NA	E Clutch- External Spline	.082/2.08	11-On	4	32T - ID: 5.342"

STEEL CLUTCHES

ILL	ALTO No.	REF No.	Description	Spec	Year	Qty	Notes
N I	216701-178	NA	A Clutch	.070/1.78	11-On	4	30T - ID: 4.837"
N I	216703-178	NA	B Clutch	.070/1.78	11-On	4	36T - ID: 6.804"
N I	216705A208	NA	C Clutch- Internal Spline	.082/2.08	11-On	5	24T - OD: 6.430"
N I	216707-198	NA	D Clutch	.078/1.98	11-On	3	30T - ID: 5.720"
N I	216705A208	NA	E Clutch- Internal Spline	.082/2.08	11-On	4	24T - OD: 6.430"

TORQUE CONVERTER - FRICTION RINGS AND CLUTCHES

ILL	ALTO No.	REF No.	Description	Spec	Year	Qty	Notes
N I	215714	ZF-CP-8F	Torque Converter	.096/2.44	11-On	2	80T - OD: 7.766"- SEG
N I	215715-175	ZF-CP-9SX	Torque Converter	.069/1.75	11-On	1	30T - ID: 6.498"
N I	215715-277	ZF-CP-10SX	Torque Converter	.109/2.77	11-On	1	30T - ID: 6.498"
N I	215765	ZF-CP-11SX	Torque Converter Pressure Plate	.168/4.27	11-On	1	30T - ID: 6.498"

FILTERS

ILL	ALTO No.	REF No.	Description	Spec	Year	Qty	Notes
N I	216942	OB2-398-009	Filter		11-On	1	

BUSHINGS

ILL	ALTO No.	REF No.	Description	Spec	Year	Qty	Notes
N I	215625B	NA	Bushing Kit		10-On	1	Bi-Metal
N I	215200	NA	Support		10-On	1	Bi-Metal
N I	215201A	NA	Hub - Front		10-On	1	Bi-Metal
N I	215201B	NA	Hub - Rear		10-On	1	Bi-Metal
N I	215202	NA	#1 Planetary		10-On	1	Bi-Metal
N I	215203A	NA	Sunshell - Front		10-On	1	Bi-Metal
N I	215203B	NA	Sunshell - Rear		10-On	1	Bi-Metal
N I	215204	NA	#4 Planetary		10-On	1	Bi-Metal

ZF

ZF8HP55

2011-On

MOLDED PISTONS

ILL	ALTO No.	REF No.	Description	Spec	Year	Qty	Notes
N I	216302	NA	E Clutch Piston		11-On	1	
KT	216670	NA	Piston Kit		11-On	1	3 Pistons
N I	216300	NA	B Clutch Piston		11-On	1	
N I	216301	NA	C Clutch Piston		11-On	1	

ZF
ZF8HP70
2011-On

KITS

ILL	Description	Years	Friction Module	Steel Module	Overhaul Kit	Banner Kit	Master Kit
KT	Rebuilding Kit with Molded Pistons	11-On	216752	216753	216800	216901LS	216901
KT	Rebuilding Kit without Molded Pistons	11-On	216752	216753	216800X	216901XLS	216901X

KITS-HI-PERFORMANCE with PowerPack

ILL	Description	Years	Friction and Steel Module	Overhaul Kit	Banner Kit	Master Kit
KT	Rebuilding Kit with PowerPack with Molded Pistons	11-On	216750PWR	216800	NA	216901PWR
KT	Rebuilding Kit with PowerPack without Molded Pistons	11-On	216750PWR	216800X	NA	216901XPWR

FRICTION CLUTCHES

ILL	ALTO No.	REF No.	Description	Spec	Year	Qty	Notes
N I	216700-157	NA	A Clutch	.062/1.57	11-On	5	HEG - 32T - OD: 5.742"
N I	216700-157	NA	A Clutch	.062/1.57	11-On	5	HEG - 32T - OD: 5.742"
N I	216702-211	NA	B Clutch	.083/2.11	11-On	5	HEG - 40T - OD: 7.810"
N I	216704A208	NA	C Clutch- External Spline	.082/2.08	11-On	6	HEG - 32T - ID: 5.342"
N I	216706-211	NA	D Clutch	.083/2.11	11-On	4	HEG - 63T - OD: 6.773"
N I	216704A208	NA	E Clutch- External Spline	.082/2.08	11-On	5	HEG - 32T - ID: 5.342"

FRICTION CLUTCHES -HI-PERFORMANCE

ILL	ALTO No.	REF No.	Description	Spec	Year	Qty	Notes
N I	216700A152	NA	A Clutch	.060/1.52	11-On	6	G3BK - 32T - ID: 5.742"
N I	216702A152	NA	B Clutch	.060/1.52	11-On	6	G3BK - 38T - ID: 7.810"
N I	216704B185	NA	C Clutch- External Spline	.073/1.85	11-On	7	G3BK - 32T - ID: 5.342"
N I	216706A168	NA	D Clutch	.066/1.68	11-On	5	G3BK - 63T - ID: 6.773"
N I	216704B185	NA	E Clutch- External Spline	.073/1.85	11-On	6	G3BK - 32T - ID: 5.342"

STEEL CLUTCHES

ILL	ALTO No.	REF No.	Description	Spec	Year	Qty	Notes
N I	216701-178	NA	A Clutch	.070/1.78	11-On	5	30T - ID: 4.837"
N I	216703-178	NA	B Clutch	.070/1.78	11-On	5	36T - ID: 6.804"
N I	216705A208	NA	C Clutch- Internal Spline	.082/2.08	11-On	6	24T - OD: 6.430"
N I	216707-198	NA	D Clutch	.078/1.98	11-On	4	30T - ID: 5.720"
N I	216707-295	NA	D Clutch - Pressure Plate	.116/2.95	11-On	1	30T - ID: 5.720"
N I	216705A356	NA	E Clutch- Internal Pressure Plate	.140/3.56	11-On	1	24T - OD: 6.430"
N I	216705A356	NA	E Clutch- Internal Pressure Plate	.140/3.56	11-On	1	24T - OD: 6.430"

STEEL CLUTCHES - HI-PERFORMANCE - Kolene®

ILL	ALTO No.	REF No.	Description	Spec	Year	Qty	Notes
N I	216701K145	NA	A Clutch	.057/1.45	11-On	6	30T - ID: 4.837"
N I	216701K297	NA	A Clutch - Pressure Plate	.117/2.97	11-On	1	30T - ID: 4.837"
N I	216703K165	NA	B Clutch	.065/1.65	11-On	6	36T - ID: 6.804"
N I	216705AK173	NA	C Clutch- Internal Spline	.068/1.73	11-On	7	24T - OD: 6.430"
N I	216707K157	NA	D Clutch	.062/1.57	11-On	5	30T - ID: 5.720"
N I	216705AK163	NA	E Clutch- Internal Spline	.064/1.63	11-On	6	24T - OD: 6.430"

BUSHINGS

ILL	ALTO No.	REF No.	Description	Spec	Year	Qty	Notes
N I	215625B	NA	Bushing Kit		10-On	1	Bi-Metal
N I	215200	NA	Support		10-On	1	Bi-Metal
N I	215201A	NA	Hub - Front		10-On	1	Bi-Metal
N I	215201B	NA	Hub - Rear		10-On	1	Bi-Metal

ZF
ZF8HP70
2011-On

BUSHINGS

ILL	ALTO No.	REF No.	Description	Spec	Year	Qty	Notes
N I	215202	NA	#1 Planetary		10-On	1	Bi-Metal
N I	215203A	NA	Sunshell - Front		10-On	1	Bi-Metal
N I	215203B	NA	Sunshell - Rear		10-On	1	Bi-Metal
N I	215204	NA	#4 Planetary		10-On	1	Bi-Metal

PISTONS

ILL	ALTO No.	REF No.	Description	Spec	Year	Qty	Notes
KT	216670	NA	Piston Kit		11-On	1	3 Pistons
N I	216300	NA	B Clutch Piston		11-On	1	
N I	216301	NA	C Clutch Piston		11-On	1	
N I	216302	NA	E Clutch Piston		11-On	1	

ZF
ZF8HP90
2009-On

KITS

ILL	Description	Years	Friction Module	Steel Module	Overhaul Kit	Banner Kit	Master Kit
KT	Rebuilding Kit with Molded Pistons	09-On	216752B	216753B	216804	216905LS	216905
KT	Rebuilding Kit without Molded Pistons	09-On	216752B	216753B	216804X	216905XLS	216905X

FRICTION CLUTCHES

ILL	ALTO No.	REF No.	Description	Spec	Year	Qty	Notes
N I	216700-157	NA	A Clutch	.062/1.57	09-On	5	HEG - 32T - OD: 5.742"
N I	216712-205	NA	B Clutch	.080/2.05	09-On	5	HEG - 38T - OD: 8.250"
N I	216704A208	NA	C Clutch- External Spline	.082/2.08	09-On	6	HEG - 32T - ID: 5.342"
N I	216706-211	NA	D Clutch	.083/2.11	09-On	4	HEG - 63T - OD: 6.773"
N I	216704A208	NA	E Clutch- External Spline	.082/2.08	09-On	5	HEG - 32T - ID: 5.342"

STEEL CLUTCHES

ILL	ALTO No.	REF No.	Description	Spec	Year	Qty	Notes
N I	216711-178	NA	A Clutch	.070/1.78	09-On	6	27T - ID: 4.830"
N I	216713-180	NA	B Clutch	.071/1.80	09-On	5	42T - OD: 7.280"
N I	216715-280	NA	C Clutch	.110/2.79	09-On	7	24T - OD: 6.430"
N I	216717-240	NA	D Clutch	.094/2.39	09-On	5	30T - ID: 5.720"

MOLDED PISTONS

ILL	ALTO No.	REF No.	Description	Spec	Year	Qty	Notes
N I	216671	NA	Piston Kit		09-On	1	

ZF Bus

FRICTION CLUTCHES

ILL	ALTO No.	REF No.	Description	Spec	Year	Qty	Notes
N I	329711A245	4181 295 056	One Sided External Spline	.096/2.44		1	HEG - 42T - ID: 6.241"
N I	329712A310	0501 215 214	One Sided Internal Spline	.122/3.10		1	HEG - 61T - OD: 13.712" - PLI
N I	329713A310	0501 220 555	One Sided External Spline	.122/3.10		1	HEG - 24T - ID: 12.28"
N I	329714A245	4181 292 032	One Sided Internal Spline	.096/2.44		1	HEG - 46T - OD: 11.443" - PLI
N I	329715A245	4181 292 033	One Sided External Spline	.096/2.44		1	HEG - 72T - ID: 9.588"
N I	329717A245	4181 295 065	One Sided Internal Spline	.096/2.44		1	HEG - 32T - OD: 7.815" - PLI

STEEL CLUTCHES

ILL	ALTO No.	REF No.	Description	Spec	Year	Qty	Notes
N I	329715-142	4181 328 017	Steel	.056/1.42		1	72T - ID: 9.581"
N I	329715X	4181 327 001	Steel - Waved	.031/.79		1	72T - ID: 9.581"
N I	329717-140	4181 355 026	Steel	.055/1.40		1	32T - ID: 5.821"

Z F

ECOMAT 4HP500, 5HP500, 4HP590, 5HP590 4HP600, 5HP600, 6HP600, W360

KITS

*Add Suffix SK for Super Kit

ILL	Description	Years	Friction Module	Steel Module	Overhaul Kit	Banner Kit	Master Kit
KT	Rebuilding Kit	90-On	121752	121753	121800	121901LS	121901
	Also available: Torque Converter Kit, Cover Plate Kit & Sealing Ring Kit - Inquire for Details				Main Body Kit		
KT	Rebuilding Kit - 6HP600 only	90-On	121752A	121753A	TBA	TBA	TBA

MISCELLANEOUS GASKETS. REPAIR KITS & COMPONENTS

ILL	ALTO No.	REF No.	Description	Spec	Year	Qty	Notes
N I	121816	4139-301-579	Gasket, Oil Pan	Fiber	90-On	1	
N I	121803A	4139-298-943	Repair Kit		90-On	1	
N I	121803B	4139-298-939	Repair Kit - Front cover		90-On	1	
N I	121803C	4139-298-937	Repair Kit		90-On	1	
N I	121803D	4139-298-942	Repair Kit - Lip seal		90-On	1	
N I	121803E	4139-298-941	Repair Kit - Lip seal		90-On	1	
N I	121803F	4139-298-938	Repair Kit		90-On	1	
N I	121803G	4139-298-940	Repair Kit - Front cover		90-On	1	
N I	121803H	4139-298-954	Repair Kit - Lip seal		90-On	1	
N I	121803J	4139-298-945	Repair Kit		90-On	1	

FRICTION CLUTCHES

ILL	ALTO No.	REF No.	Description	Spec	Year	Qty	Notes
N I	121700	4139-270-025	A Clutch - external Teeth	.118 / 3.00	90-On	6-8	HEG - 10T - ID: 4.967 "- PLNI
		0501-213-172					
		4139-270-021					
N I	121702	4139-233-177	B Clutch (Except 6HP600)	.115 / 2.90	90-On	4-5	HEG - 42T - OD: 10.100" - PLNI
		4139-270-036					
		0501-213-173					
N I	121702-315	NA	B Clutch (6HP600)	.124 / 3.15	90-On	4-5	HEG - 43T - OD: 10.100" - PLNI
N I	121702	4139-233-177	C Clutch (Except 6HP600)	.115 / 2.90	90-On	4	HEG - 42T - OD: 10.100" - PLNI
		4139-270-036					
		0501-213-173					
N I	121702-315	NA	C Clutch (6HP600)	.124 / 3.15	90-On	4	HEG - 43T - OD: 10.100" - PLNI
N I	121704	4139-233-178	D Clutch	.118 / 3.00	90-On	3-4	HEG - 46T - OD: 10.932" - PLNI
		4139-233-083					
		4139-233-303					
		4139-233-307					
N I	121704	4139-233-178	E Clutch	.118 / 3.00	90-On	6-7	HEG - 46T - OD: 10.932" - PLNI
		4139-233-083					
		4139-233-303					
		4139-233-307					
N I	121704	4139-233-178	F Clutch	.118 / 3.00	90-On	6-8	HEG - 46T - OD: 10.932" - PLNI
		4139-233-083					
		4139-233-303					
		4139-233-307					
N I	121704A262	4139-233-307	D, E, F Clutch - selective	.103 / 2.62	TBA	AR	HEG - 46T - OD: 10.932" - SB
N I	121708-300	4139-233-309	G Clutch (6HP600)	.118 / 3.00	90-On	9	HEG - 48T - OD: 10.930" - PL

STEEL CLUTCHES

ILL	ALTO No.	REF No.	Description	Spec	Year	Qty	Notes
N I	121701	4139-333-036	A Clutch - internal Teeth	.079 / 2.00	90-On	6-8	32T - OD: 6.417"
N I	121701-250	4139-333-765	A Clutch - internal Teeth (selective)	.098 / 2.50	90-On	AR	32T - OD: 6.417"
N I	121703A300	4149-370-001	A Clutch - 45 Teeth	.118 / 3.00	90-On	AR	45T - ID: 8.708"
N I	121703	4139-333-172	B Clutch, C Clutch	.079 / 2.00	90-On	4	34T - ID: 8.708"

Z F

ECOMAT 4HP500, 5HP500, 4HP590, 5HP590 4HP600, 5HP600, 6HP600, W360

STEEL CLUTCHES

ILL	ALTO No.	REF No.	Description	Spec	Year	Qty	Notes
N I	121703-250	4139-333-759	B Clutch, C Clutch - selective	.098 / 2.50	90-On	AR	34T - ID: 8.708"
N I	121705	4139-333-015	D Clutch, E Clutch, F Clutch	.079 / 2.00	90-On	4	24T - ID: 9.304"
N I	121705-250	4139-333-745	D Clutch, E Clutch, F Clutch (selective)	.098 / 2.50	90-On	AR	24T - ID: 9.304"
N I	121705-300	4139-333-263	D Clutch - selective	.118 / 3.00	90-On	AR	24T - ID: 9.304"
N I	121705A200	4139-373-029	F Clutch - wider teeth no holes	.079 / 2.00	90-On	AR	24T - ID: 9.320"
N I	121709-200	NA	G Clutch (6HP600)	.079 / 2.00	90-On	9	24T - ID: 9.767"
N I	121709-250	NA	G Clutch - selective (6HP600)	.098 / 2.50	90-On	AR	24T - ID: 9.767"

TORQUE CONVERTER-FRICTION RINGS AND CLUTCHES

ILL	ALTO No.	REF No.	Description	Spec	Year	Qty	Notes
N I	121706	4166-238-037	Torque Converter (Except 6HP600, 5HP590)	.118 / 3.00	90-On	2	Grn - 18T - OD: 12.930" - SM
N I	121706A320	4166-238-042	Torque Converter (6HP600)	.124 / 3.15	90-On	2	HEG - 36T - OD: 15.398" - PL
N I	121706C310	4166-236-134	Torque Converter (W360)	.122 / 3.10	90-On	AR	HEG - 59T - OD: 12.96"
		4166-236-098					
		4166-236-129					
N I	121706D310	0501-212-249	Torque Converter	.123 / 3.12	90-On	1	66T - OD: 15.009"
N I	121707	4139-334-004	Torque Converter (Except 6HP600)	.079 / 2.00	90-On	AR	12T - ID: 11.887"
N I	121707-300	NA	Torque Converter (Except 6HP600)	.118 / 3.00	90-On	AR	12T - ID: 11.887"
N I	121707-350	4139-334-006	Torque Converter (Except 6HP600)	.138 / 3.50	90-On	AR	12T - ID: 11.887"
N I	121707-400	4139-334-005	Torque Converter (W360)	.157 / 3.99	90-On	AR	12T - ID: 11.887"
N I	121707A250	NA	Torque Converter (6HP600)	.098 / 2.50	90-On	2	36T - ID: 14.313"
N I	121707A300	4166-338-202	Torque Converter (6HP600)	.118 / 3.00	90-On	1	36T - ID: 14.313"
N I	121707B400	0501-320-306	Torque Converter	.157 / 4.00	90-On	AR	12T - ID: 11.800"
N I	121707D405	0501-318-589	Torque Converter	.159 / 4.04	90-On	1	8T - ID: 13.224"
N I	121716-305	0501-213-150	Torque Converter (5HP590)	.079 / 2.00	90-On	6-8	HEG - 59T - OD: 13.365" - PLNI

PRESSURE PLATES

ILL	ALTO No.	REF No.	Description	Spec	Year	Qty	Notes
N I	121701-300	4139-333-694	A Clutch - Bottom	.118 / 3.00	90-On	1	32T - OD: 6.417"
N I	121703-300	4139-333-373	B Clutch - Bottom	.118 / 3.00	90-On	1	34T - ID: 8.708"
N I	TBA	4139-333-437	C Clutch - Bottom		90-On	1	
N I	121705-300	4139-333-263	D Clutch - Bottom	.118 / 3.00	90-On	1	24T - ID: 9.304"
N I	121705B300	4139-333-766	E Clutch - Bottom no holes	.118 / 3.00	90-On	1	
N I	121763	4139-333-480	F Clutch - Top	.079 / 2.00	90-On	1	24T - ID: 9.304

FILTERS

ILL	ALTO No.	REF No.	Description	Spec	Year	Qty	Notes
N I	121940	0750-131-003	Filter		90-On	1	

METAL CLAD SEALS

ILL	ALTO No.	REF No.	Description	Spec	Year	Qty	Notes
N I	121400	0750-111-044	Front Pump	150mm	90-On	1	
N I	121405	0750-111-018	Extension Housing (without PTO)	125mm	90-On	1	
N I	121420	0734-310-353	Speedometer	15mm	90-On	1	

GENERAL MOTORS
DYNAFLOW 1948-63
Except Buick Special

KITS
*Add Suffix SK for Super Kit

ILL	Description	Years	Friction Module	Steel Module	Overhaul Kit	Banner Kit	Master Kit
KT	Rebuilding Kit	48-54	011752	011753	011800	011901LS	011901
KT	Rebuilding Kit	55-60	011752	011753	011802	011903LS	011903
KT	Rebuilding Kit - except Buick Special	61-63	011752	011753	011804	011905LS	011905

FRICTION CLUTCHES

ILL	ALTO No.	REF No.	Description	Spec	Year	Qty	Notes
N I	011704	NA	Friction	.100	48-63	6	Tan - 51T - OD: 5.318"-WF

STEEL CLUTCHES

ILL	ALTO No.	REF No.	Description	Spec	Year	Qty	Notes
N I	011701	NA	Steel	.070	48-63	6	6T - ID: 4.070"

GENERAL MOTORS
BUICK SPECIAL
1961-63

KITS
*Add Suffix SK for Super Kit

ILL	Description	Years	Friction Module	Steel Module	Overhaul Kit	Banner Kit	Master Kit
KT	Rebuilding Kit	61-63	012752	012753	012800	012901LS	012901

FRICTION CLUTCHES

ILL	ALTO No.	REF No.	Description	Spec	Year	Qty	Notes
N I	012700	NA	Forward (Large)	.080	61-63	5	Tan - 66T - OD: 5.438"-SM
N I	012700	NA	Reverse (Large)	.080	61-63	4	Tan - 66T - OD: 5.438"-SM
N I	012702	NA	Coast (Small)	.080	61-63	5	Tan - 28T - OD: 3.561"-PL
N I	012702	NA	Split Torque (Small)	.080	61-63	4	Tan - 28T - OD: 3.561"-PL

STEEL CLUTCHES

ILL	ALTO No.	REF No.	Description	Spec	Year	Qty	Notes
N I	012701	NA	Forward (Large)	.070	61-63	5	17T - ID: 4.365"
N I	012705	NA	Reverse (Large)	.070	61-63	3	17T - ID: 4.369"
N I	012707	NA	Coast (Small)	.070	61-63	4	12T - ID: 2.430"
N I	012707	NA	Split Torque (Small)	.070	61-63	3	12T - ID: 2.430"

GENERAL MOTORS
HYDRAMATIC 1951-64
STANDARD & DUAL RANGE

KITS — ***Add Suffix SK for Super Kit**

ILL	Description	Years	Friction Module	Steel Module	Overhaul Kit	Banner Kit	Master Kit
KT	Rebuilding Kit	51-64	013752	013753	013800	013901LS	013901

FRICTION CLUTCHES

ILL	ALTO No.	REF No.	Description	Spec	Year	Qty	Notes
N I	013700	NA	Front & Rear - wave	.098	51-64	12	Tan - 51T - OD: 5.318"-PL

STEEL CLUTCHES

ILL	ALTO No.	REF No.	Description	Spec	Year	Qty	Notes
N I	013701	NA	Front & Rear	.067	51-64	12	12T - ID: 4.070"
N I	013701A	NA	Rear - wave	.050	51-64	AR	12T - ID: 4.070"
		NA					

GENERAL MOTORS
ROTO-HYDRAMATIC "240"
Model 05 / F-85 1961-63

KITS — ***Add Suffix SK for Super Kit**

ILL	Description	Years	Friction Module	Steel Module	Overhaul Kit	Banner Kit	Master Kit
KT	Rebuilding Kit	61-63	015752	015753	015800	015901LS	015901

FRICTION CLUTCHES

ILL	ALTO No.	REF No.	Description	Spec	Year	Qty	Notes
N I	015700	NA	Front - Bent Ears	.096	61-63	5	24T - OD: 5.002" - SM

STEEL CLUTCHES

ILL	ALTO No.	REF No.	Description	Spec	Year	Qty	Notes
N I	015701	NA	Front	.070	61-63	5	21T - ID: 4.798"

GENERAL MOTORS
ROTO-HYDRAMATIC "375"
Model 10 / Slim Jim 1961-64

KITS — ***Add Suffix SK for Super Kit**

ILL	Description	Years	Friction Module	Steel Module	Overhaul Kit	Banner Kit	Master Kit
KT	Rebuilding Kit	61-64	016752	016753	016800	016901LS	016901

FRICTION CLUTCHES

ILL	ALTO No.	REF No.	Description	Spec	Year	Qty	Notes
N I	016702	NA	Front - Bent Ears	.098	61-64	7	24T - OD: 5.813" - SM
N I	016706	NA	Neutral	.098	61-64	4	Tan - 47T - OD: 6.066"-SM

STEEL CLUTCHES

ILL	ALTO No.	REF No.	Description	Spec	Year	Qty	Notes
N I	016701	NA	Front - wave	.070	61-64	7	21T - ID: 5.536"
N I	016703	NA	Neutral	.050	61-64	4	18T - ID: 4.930"

GENERAL MOTORS
POWERGLIDE
CAST IRON CASE 1950-62

KITS

*Add Suffix SK for Super Kit

ILL	Description	Years	Friction Module	Steel Module	Overhaul Kit	Banner Kit	Master Kit
KT	Rebuilding Kit	50-52	018752	018753	018800	018901LS	018901
KT	Rebuilding Kit	53-54	018752	018753	018802	018903LS	018903
KT	Rebuilding Kit	55	018752	018753C	018806	018905ALS	018905A
KT	Rebuilding Kit	56-57	018752A	018753	018806	018905LS	018905
KT	Rebuilding Kit	58-62	018752B	018753A	018806	018907LS	018907

FRICTION CLUTCHES

ILL	ALTO No.	REF No.	Description	Spec	Year	Qty	Notes
N I	018700	3779904	High / Low - wave	.098	61-62	2-4	Tan - 43T - OD: 5.062"-SM
N I	018708	NA	High / Low - flat	.098	56-60	4	Tan - 43T - OD: 5.062"-SM
N I	018710	NA	High / Low (lug type)	.098	50-55	4	Tan - 8T - OD: 5.062"-SM

STEEL CLUTCHES

ILL	ALTO No.	REF No.	Description	Spec	Year	Qty	Notes
N I	018707	NA	High / Low	.070	50-55	5	6T - ID: 3.755"
N I	018703	3779903	High / Low - wave	.070	56-60	3/5	6T - ID: 3.870"
N I	018705	NA	High / Low - use with 3 Pc. 018703	.090	57	2	6T - ID: 3.870"
N I	019701A	NA	High / Low	.060	61-62	5	12T - ID: 3.870"

GENERAL MOTORS

JETAWAY "315"

1956-64

KITS

*Add Suffix SK for Super Kit

ILL	Description	Years	Friction Module	Steel Module	Overhaul Kit	Banner Kit	Master Kit
KT	Rebuilding Kit	56-64	014752	014753	014800	014901LS	014901

FRICTION CLUTCHES

ILL	ALTO No.	REF No.	Description	Spec	Year	Qty	Notes
N I	014702	NA	Neutral	.100	56-64	5	Tan - 49T - OD: 6.408"-SM
N I	014706	NA	Overrun	.120	56-64	1	Tan - 4T - OD: 5.467"-SM
N I	014710	NA	Rear	.100	59-64	7	Tan - 45T - OD: 6.300"-SM
N I	014714	NA	Rear	.100	56-58	7	Cork & Rubber

STEEL CLUTCHES

ILL	ALTO No.	REF No.	Description	Spec	Year	Qty	Notes
N I	014701	NA	Neutral	.050	56-64	7	6T - ID: 5.106"
N I	014703	NA	Rear	.070	56-64	7	10T - ID: 4.716"

FILTERS

ILL	ALTO No.	REF No.	Description	Spec	Year	Qty	Notes
N I	014940	NA	Filter		60-64	1	

GENERAL MOTORS

SUPER TURBINE 300

1964-69

KITS

*Add Suffix SK for Super Kit

ILL	Description	Years	Friction Module	Steel Module	Overhaul Kit	Banner Kit	Master Kit
KT	Rebuilding Kit	64-69	030752	030753	030800	030901LS	030901

FRICTION CLUTCHES

ILL	ALTO No.	REF No.	Description	Spec	Year	Qty	Notes
N I	018708	NA	Front	.068	64-69	4	Tan - 43T - OD: 5.062"-SM
N I	019702	NA	Rear	.098	64-69	5	Tan - 25T - OD: 6.461"-SM

STEEL CLUTCHES

ILL	ALTO No.	REF No.	Description	Spec	Year	Qty	Notes
N I	019701	NA	Front	.070	64-69	3-5	12T - ID: 3.874"
N I	019703	NA	Rear	.070	64-69	AR	6T - ID: 5.727"

FORD

FORDOMATIC 2 SPEED

1959-64

KITS

*Add Suffix SK for Super Kit

ILL	Description	Years	Friction Module	Steel Module	Overhaul Kit	Banner Kit	Master Kit
KT	Rebuilding Kit	59-64	024752	024753	024800	024901LS	024901

FRICTION CLUTCHES

ILL	ALTO No.	REF No.	Description	Spec	Year	Qty	Notes
N I	024700	NA	Front	.092	59-64	2-5	Tan - 51T - OD: 5.959"-SM

STEEL CLUTCHES

ILL	ALTO No.	REF No.	Description	Spec	Year	Qty	Notes
N I	024701	NA	Front	.068	59-64	3-5	12T - ID: 4.410"

FORD

SMALL CASE 1951-67, MEDIUM CASE 1955-69
LARGE CASE 1958-65

KITS

*Add Suffix SK for Super Kit

ILL	Description	Years	Friction Module	Steel Module	Overhaul Kit	Banner Kit	Master Kit
KT	Rebuilding Kit - Small Case	51-67	023752A	023753A	023802	023903LS	023903
KT	Rebuilding Kit - Medium Case	55-69	023752B	023753B	023806	023905LS	023905
KT	Rebuilding Kit - Large Case	58-65	023752C	023753C	023808	023907LS	023907

FRICTION CLUTCHES

ILL	ALTO No.	REF No.	Description	Spec	Year	Qty	Notes
N I	049700	NA	Front & Rear	.061	51-69	9	Tan - 45T - OD: 5.250"-PL
N I	023712	NA	Front & Rear (Large Case)	.061	58-65	9	Tan - 52T - OD: 5.850"-PL
N I	023712BR	NA	Front & Rear	.061	58-65	9	Brz - 52T - OD: 5.850"-SB
N I	049700-216	NA	Front	.085		3	Tan - 45T - OD: 5.250"

STEEL CLUTCHES

ILL	ALTO No.	REF No.	Description	Spec	Year	Qty	Notes
N I	023701	NA	Front & Rear	.068	51-69	AR	54T - ID: 3.898"
N I	023701K	NA	Front & Rear (Kolene®)	.068	51-69	AR	54T - ID: 3.898"
N I	023703	NA	Rear - Dish	.065	51-69	4-6	54T - ID: 3.898"
N I	023705	NA	Rear	.090	62-67	4-6	54T - ID: 3.898"
N I	023719	NA	Front & Rear (Large Case)	.070	58-65	3	60T - ID: 4.490"
N I	023767	NA	Front Dish Spring	.073	51-On	1	8T - OD: 5.289"

CHRYSLER
POWERFLITE
1953-61

KITS
*Add Suffix SK for Super Kit

ILL	Description	Years	Friction Module	Steel Module	Overhaul Kit	Banner Kit	Master Kit
KT	Rebuilding Kit	53-E56	021752	021753	021800	021901LS	021901
KT	Rebuilding Kit	56-61	021752A	021753A	021800	021901ALS	021901A

FRICTION CLUTCHES

ILL	ALTO No.	REF No.	Description	Spec	Year	Qty	Notes
N I	021700	NA	Direct - wave	.100	53-E56	5-6	Tan - 8T - OD: 5.13"-SM
N I	021702	NA	Direct - wave	.100	56-61	5-6	Tan - 12T - OD: 5.13"-SM

STEEL CLUTCHES

ILL	ALTO No.	REF No.	Description	Spec	Year	Qty	Notes
N I	021701	NA	Direct	.070	53-61	5-6	8T - ID: 4.070"

CHRYSLER
TORQUEFLITE
CAST IRON CASE 1956-61

KITS
*Add Suffix SK for Super Kit

ILL	Description	Years	Friction Module	Steel Module	Overhaul Kit	Banner Kit	Master Kit
KT	Rebuilding Kit	56-61	022752	022753	022800	022901LS	022901

FRICTION CLUTCHES

ILL	ALTO No.	REF No.	Description	Spec	Year	Qty	Notes
N I	022700	NA	Front	.063	56-61	3	Tan - 45T - OD: 5.512"-PL
N I	022702	NA	Front - selective	.077	56-61	AR	Tan - 45T - OD: 5.512"-SP
N I	022706	NA	Rear	.097	56-61	5	Tan - 45T - OD: 5.512"-PL

STEEL CLUTCHES

ILL	ALTO No.	REF No.	Description	Spec	Year	Qty	Notes
N I	022701	NA	Front	.070	56-61	3	8T - ID: 4.135"
N I	022701	NA	Rear	.070	56-61	4	8T - ID: 4.135"

BORG WARNER

MODELS 3 thru 8, 11 thru 12

CAST IRON CASE 1956-61

KITS

*Add Suffix SK for Super Kit

ILL	Description	Years	Friction Module	Steel Module	Overhaul Kit	Banner Kit	Master Kit
KT	Rebuilding Kit	56-74	023752B	023753F	023804	023903ALS	023903A

FRICTION CLUTCHES

ILL	ALTO No.	REF No.	Description	Spec	Year	Qty	Notes
N I	049700	NA	Front & Rear	.061	56-74	3-4	Tan - 45T - OD: 5.250"-PL
N I	049700BR	NA	Front & Rear - bronze	.061	56-74	3-4	Brz - 45T - OD: 5.250"-SB

STEEL CLUTCHES

ILL	ALTO No.	REF No.	Description	Spec	Year	Qty	Notes
N I	023701	NA	Front	.068	56-74	2-3	54T - ID: 3.898"
N I	023703	NA	Rear - dish	.068	56-74	4-5	54T - ID: 3.898"

BORG WARNER

3 BAND

1950-56

KITS

*Add Suffix SK for Super Kit

ILL	Description
KT	Rebuilding Kit - *NOT AVAILABLE*

FRICTION CLUTCHES

ILL	ALTO No.	REF No.	Description	Spec	Year	Qty	Notes
N I	033710	NA	Friction	.098	50-67	3-4	Tan - 57T - OD: 5.037"-SM

STEEL CLUTCHES

ILL	ALTO No.	REF No.	Description	Spec	Year	Qty	Notes
N I	033711	NA	Steel	.069	50-67	5	6T - ID: 3.720"

HONDA

2 SPEED (95mm Clutches)

1973-80

KITS

*Add Suffix SK for Super Kit

ILL	Description	Years	Friction Module	Steel Module	Overhaul Kit	Banner Kit	Master Kit
KT	Rebuilding Kit	73-80	047752	047753	047800	047901LS	047901

FRICTION CLUTCHES

ILL	ALTO No.	REF No.	Description	Spec	Year	Qty	Notes
N I	047700	22535-639-010	Drive	.075/1.9	73-80	4	Tan - 38T - OD: 3.775"-PL
N I	047700	22535-639-010	Low	.075/1.9	73-80	4	Tan - 38T - OD: 3.775"-PL

STEEL CLUTCHES

ILL	ALTO No.	REF No.	Description	Spec	Year	Qty	Notes
N I	047701	22536-639-000	Drive	.079/2.0	73-80	4	39T - ID: 2.833"
N I	047701	22536-639-000	Low	.079/2.0	73-80	4	39T - ID: 2.833"
N I	047701K	NA	Drive & Low - Kolene®	.079/2.0	73-80	AR	39T - ID: 2.833"
N I	047701A	NA	Drive & Low - selective	.070/1.8	73-80	AR	39T - ID: 2.833"

TOYOTA

A10 2 SPEED

1965-70

KITS

*Add Suffix SK for Super Kit

ILL	Description	Years	Friction Module	Steel Module	Overhaul Kit	Banner Kit	Master Kit
KT	Rebuilding Kit	65-70	035752	035753	035800	035901LS	035901

FRICTION CLUTCHES

ILL	ALTO No.	REF No.	Description	Spec	Year	Qty	Notes
N I	035700	35633-10011	Front	.110/2.8	65-70	3	Tan - 6T - OD: 4.697"-PL

STEEL CLUTCHES

ILL	ALTO No.	REF No.	Description	Spec	Year	Qty	Notes
N I	035701	35634-31010	Front	.067/1.7	65-70	7	6T - ID: 3.515"

TOYOTA
A20 2 SPEED
1970-74

KITS
*Add Suffix SK for Super Kit

ILL	Description	Years	Friction Module	Steel Module	Overhaul Kit	Banner Kit	Master Kit
KT	Rebuilding Kit	70-74	037752	037753	037800	037901LS	037901

FRICTION CLUTCHES

ILL	ALTO No.	REF No.	Description	Spec	Year	Qty	Notes
N I	037700	35633-12010	Front	.100/2.5	70-74	3	Tan - 8T - OD: 4.234"-PL
N I	037702	35883-12010	Rear	.100/2.5	70-74	4	Tan - 22T - OD: 5.240"-SM

STEEL CLUTCHES

ILL	ALTO No.	REF No.	Description	Spec	Year	Qty	Notes
N I	037701	35634-12010	Front	.067/1.7	70-74	4-6	6T - ID: 3.365"
N I	037703	35884-12010	Rear	.060/1.6	70-74	4-5	6T - ID: 4.570"

TOYOTA
A30 3 SPEED
1968-78

KITS
*Add Suffix SK for Super Kit

ILL	Description	Years	Friction Module	Steel Module	Overhaul Kit	Banner Kit	Master Kit
KT	Rebuilding Kit	68-78	036752	036753	036800	036901LS	036901

FRICTION CLUTCHES

ILL	ALTO No.	REF No.	Description	Spec	Year	Qty	Notes
N I	036700	35633-40010	Front	.100/2.5	68-78	4	Tan - 39T - OD: 4.240"-PL
N I	036700	35633-40010	Rear	.100/2.5	68-78	3	Tan - 39T - OD: 4.240"-PL
		NA					

STEEL CLUTCHES

ILL	ALTO No.	REF No.	Description	Spec	Year	Qty	Notes
N I	036701	35634-30020	Front	.063/1.6	68-78	3	44T - ID: 3.354"
N I	036703	35634-30040	Front	.054/1.4	68-78	1	44T - ID: 3.354"
N I	036705	35634-30050	Front	.070/1.8	68-78	AR	44T - ID: 3.354"
N I	036707	35674-30010	Rear	.067/1.7	68-78	6	44T - ID: 3.354"
		NA					

VOLKSWAGEN

TYPE 003 3 SPEED

1969-76

KITS

*Add Suffix SK for Super Kit

ILL	Description	Years	Friction Module	Steel Module	Overhaul Kit	Banner Kit	Master Kit
KT	Rebuilding Kit	69-76	034752	034753	034800	034901LS	034901

FRICTION CLUTCHES

ILL	ALTO No.	REF No.	Description	Spec	Year	Qty	Notes
N I	034700	003-323-241B	Forward - rear drum	.060/1.5	69-76	3	Tan - 43T - OD: 4.156"-PL
N I	034702	003-323-141	Direct / Reverse - front drum	.090/2.3	69-76	2	Tan - 43T - OD: 4.156"-WF
		NA					

STEEL CLUTCHES

ILL	ALTO No.	REF No.	Description	Spec	Year	Qty	Notes
N I	034701	003-323-139	Forward - rear drum	.079/2.0	69-76	3	16T - ID: 3.527"
N I	034701	003-323-139	Direct / Reverse - front drum	.079/2.0	69-76	2	16T - ID: 3.527"
		NA					

Z F

ZF3HP12, ZF3HP20

1966-81

KITS

*Add Suffix SK for Super Kit

ILL	Description
KT	Rebuilding Kit - *NOT AVAILABLE*

FRICTION CLUTCHES

ILL	ALTO No.	REF No.	Description	Spec	Year	Qty	Notes
N I	052700	24231-201-062	Front	.070/1.8	66-81	7	Tan - 56T - OD: 5.432"-PL
N I	052702	24231-205-106	Rear	.076/1.9	66-81	8	Tan - 56T - OD: 5.432"-PL

BTR / DSI

85/91/95LE, 74/93/97LE 1990-2011

575R6 6 SP FWD DC5A SSANYONG MAHINDRA 5 SP 2009-14

KITS

*Add Suffix SK for Super Kit

ILL	Description	Spec	Years	Friction Module	Steel Module	Overhaul Kit	Banner Kit	Master Kit
KT	Rebuilding Kit - all except below		91-On	079752	079753	079800	079901LS	079901
KT	Rebuilding Kit - BTR M74 Ford Fairlane (Australia & Asia)		93-05	079752E	079753A	079802	079903LS	079903
KT	Rebuilding Kit - BTR/ION 93/97LE Ford BA & BF Falcon (Australia & Asia)		02-08	079752B	079753A	079804	079905LS	079905
KT	Rebuilding Kit - 575R6 Ssangyong, Mahindra		09-14	079752D				

GASKETS

ILL	ALTO No.	REF No.	Description	Spec	Year	Qty	Notes
N I	079816	NA	Gasket, Oil Pan	Cork/Rub	90-On	1	

FRICTION CLUTCHES - 85/91/95LE, 74/93/97LE

ILL	ALTO No.	REF No.	Description	Spec	Year	Qty	Notes
N I	037710	0585-666-013	C1 3-4 Clutch	.079/2.0	90-On	5	HEG - 46T - OD: 4.978"-SB
		0585-666-022					
		0585-666-007					
N I	037710	0585-666-007	C2 Clutch	.079/2.0	90-On	3-4	HEG - 46T - OD: 4.978"-SB
N I	037710	0585-666-007	C3 Clutch	.079/2.0	90-On	3	HEG - 46T - OD: 4.978"-SB
N I	079702A200	0585-666-010	C4 Overrun Clutch	.079/2.0	90-On	2-3	HEG - 41T - OD: 4.601" C2PL

FRICTION CLUTCHES - DSI 575R6

ILL	ALTO No.	REF No.	Description	Spec	Year	Qty	Notes
N I	037710	30A-0008-460	C1 Clutch	.079/2.0	09-14	5	HEG - 46T - OD: 4.978"-SB
N I	037710	30A-0008-460	C2 Clutch	.079/2.0	09-14	4	HEG - 46T - OD: 4.978"-SB
N I	037710	30A-0008-460	C3 Clutch	.079/2.0	09-14	5	HEG - 46T - OD: 4.978"-SB
N I	037710	30A-0008-460	B2 Clutch	.079/2.0	09-14	6	HEG - 46T - OD: 4.978"-SB

STEEL CLUTCHES

ILL	ALTO No.	REF No.	Description	Spec	Year	Qty	Notes
N I	079701-225	0585-166-008	C1 Clutch	.089/2.2	90-On	AR	52T - ID: 4.015"
N I	079701-250	NA	C1 Clutch	.098/2.5	90-On	2	52T - ID: 4.015"
N I	079701-200	0585-166-007	C1 Clutch - selective	.079/2.0	90-On	2	52T - ID: 4.015"
N I	079701-225	0585-166-008	C2 Clutch	.089/2.2	90-On	AR	52T - ID: 4.015"
N I	079701-200	0585-166-007	C2 Clutch	.079/2.0	90-On	2	52T - ID: 4.015"
N I	079701-180	0585-166-026	C2 Clutch - Selective	.071/1.8	90-On	AR	52T - ID: 4.015"
N I	079701-225	0585-166-008	C3 Clutch	.089/2.2	90-On	1	52T - ID: 4.015"
N I	079701-200	0585-166-007	C3 Clutch - selective	.079/2.0	90-On	1	52T - ID: 4.015"
N I	079703-140	0585-166-035	C4 Clutch	.055/1.4	93-08	1	56T - ID: 3.580"
N I	079703-180	0585-166-036	C4 Clutch	.071/1.8	90-On	1	56T - ID: 3.580"
N I	079703-220	0585-166-037	C4 Clutch	.087/2.2	90-On	1	56T - ID: 3.580"
N I	079703-170	0585-166-030	C4 Clutch- selective	.067/1.7	93-08	1	56T - ID: 3.580"

BANDS

ILL	ALTO No.	REF No.	Description	Spec	Year	Qty	Notes
N I	079950	0585-557-072	Band		90-On	1	

FILTERS

ILL	ALTO No.	REF No.	Description	Spec	Year	Qty	Notes
N I	079940	TGM-10011	Filter		90-On	1	
N I	079942A	0511-738008	Filter		90-On	1	
N I	079942B	0578-738007	Filter		90-On	1	
N I	079942B	0578-738007	Filter		90-On	1	

BTR / DSI

85/91/95LE, 74/93/97LE 1990-2011

575R6 6 SP FWD DC5A SSANYONG MAHINDRA 5 SP 2009-14

MOLDED PISTONS

ILL	ALTO No.	REF No.	Description	Spec	Year	Qty	Notes
N I	079670	NA	Piston Kit		90-On	1	7 Pistons
N I	079300	0578-738007	Piston M11, C1 - Apply		90-On	1	
N I	079300A	0578-738007	Piston M11, C1 - Balance		90-On	1	
N I	079301	0578-738007	Piston M11, C2 - Apply		90-On	1	
N I	079301A	0578-738007	Piston M11, C2 - Balance		90-On	1	
N I	079302	0578-738007	Piston M11, C3 - Apply		90-On	1	
N I	079302A	0578-738007	Piston M11, C3 - Balance		90-On	1	
N I	079303	0578-738007	Piston M11, Low/Reverse - Apply		90-On	1	

DSI

M11, 6 Speed
2011-On

KITS

ILL	Description	Years	Friction Module	Steel Module	Overhaul Kit	Banner Kit	Master Kit
N I	Rebuilding Kit	11-On	079752F	NA	079836BX	079907XLS	NA

FRICTION CLUTCHES

ILL	ALTO No.	REF No.	Description	Spec	Year	Qty	Notes
N I	079760	NA	C1 Clutch	.072/1.84	11-On	1	HEG - 35T - OD: 6.167"
N I	079762	NA	C2 Clutch	.072/1.84	11-On	1	HEG - 33T - OD: 5.961"
N I	079764	NA	C3 Clutch	.072/1.84	11-On	1	HEG - 34T - OD: 6.772"
N I	079764A	NA	C3 Clutch - Forward	.072/1.84	11-On	1	BLK - 34T - OD: 6.772"
N I	079766	NA	B2	.072/1.84	11-On	1	HEG - 40T - OD: 7.232"

FILTERS

ILL	ALTO No.	REF No.	Description	Spec	Year	Qty	Notes
N I	079942A	0511-738008	Filter		90-On	1	

PISTONS

ILL	ALTO No.	REF No.	Description	Spec	Year	Qty	Notes
N I	079670	NA	Piston Kit		11-On	1	7 Pistons
N I	079300	0511-624041	Piston M11, C1 - Apply		11-On	1	
N I	079300A	0511-626004	Piston M11, C1 - Balance		11-On	1	
N I	079301	0511-624042	Piston M11, C2 - Apply		11-On	1	
N I	079301A	0511-626005	Piston M11, C2 - Balance		11-On	1	
N I	079302	0511-624043	Piston M11, C3 - Apply		11-On	1	
N I	079302A	0511-626006	Piston M11, C3 - Balance		11-On	1	
N I	079303	0511-624044	Piston M11, Low/Reverse - Apply		11-On	1	

API, II, IIIE

European Models

NA

FRICTION CLUTCHES

ILL	ALTO No.	REF No.	Description	Spec	Year	Qty	Notes
N I	079710B	NA	OE Style - all models	.102/2.6	ALL	AR	Blk - 24T - OD: 4.306"-PL
N I	079710R	NA	Aftermarket Style - all models	.102/2.6	ALL	AR	Red - 24T - OD: 4.306"-PL
N I	079722	NA	Forward - IIIE only	.102/2.6	ALL	AR	Tan - 18T - OD: 4.306"-PL

ASIAN "MINI" CARS

1988-On

NA

FRICTION CLUTCHES

ILL	ALTO No.	REF No.	Description	Spec	Year	Qty	Notes
N I	079712	NA	Forward	.065/1.7	88-On	AR	Tan- 36T - OD: 4.026"-PL
N I	079712A	NA	Forward - 2nd Design	.060/1.65	88-On	AR	HEG- 36T - OD: 4.026"-PL
N I	079714	NA	Direct	.063/1.6	88-On	AR	Tan - 18T - OD: 4.026"-PL
N I	079716	NA	Low / Reverse	.063/1.6	88-On	AR	Tan - 46T - OD: 4.538"-PL

STEEL CLUTCHES

ILL	ALTO No.	REF No.	Description	Spec	Year	Qty	Notes
N I	079713	NA	Forward & Direct	.048/1.2	88-On	AR	16T - ID: 3.375"
N I	079717	NA	Low / Reverse	.048/1.2	88-On	AR	15T - ID: 3.854"

ASIAN "MINI" CARS

1985-On

NA

KITS

*Add Suffix SK for Super Kit

ILL	Description	Friction Module	Steel Module	Overhaul Kit	Banner Kit	Master Kit
KIT	Rebuilding Kit - Daewoo Pico	079752C	079753C	TBA	TBA	TBA

FRICTION CLUTCHES

ILL	ALTO No.	REF No.	Description	Spec	Year	Qty	Notes
N I	079724	NA	Forward & Direct	.067/1.7	85-On	AR	HEG - 41T - OD: 4.214"-PL
N I	079724-180	NA	Forward & Direct - Pico	.071/1.8	85-On	8	HEG - 41T - OD: 4.214"-PL
N I	079726	NA	Low / Reverse	.067/1.7	85-On	AR	HEG - 44T - OD: 4.689"-PL
N I	079726-200	NA	Low / Reverse - Pico	.076/2.0	85-On	4	HEG - 44T - OD: 4.689"-PL

STEEL CLUTCHES

ILL	ALTO No.	REF No.	Description	Spec	Year	Qty	Notes
N I	079725	NA	Forward & Direct	.071/1.8	85-On	AR	8T - ID: 3.497"
N I	079725-213	NA	Forward & Direct - Pico	.084/2.13	85-On	8	8T - ID: 3.497"
N I	079727-220	NA	Low / Reverse - Pico	.087/2.2	85-On	4	16T - ID: 3.821"
N I	079727	NA	Low / Reverse	.071/1.8	85-On	AR	16T - ID: 3.821"

DAIHATSU MINI

NA

NA

KITS

*Add Suffix SK for Super Kit

ILL	Description	Friction Module	Steel Module	Overhaul Kit	Banner Kit	Master Kit
KT	Rebuilding Kit	127752	127753	127800	127901LS	127901

GASKETS

ILL	ALTO No.	REF No.	Description	Spec	Year	Qty	Notes
N I	127815	NA	Gasket, Oil Pan	Fiber		1	

FRICTION CLUTCHES

ILL	ALTO No.	REF No.	Description	Spec	Year	Qty	Notes
N I	127700	NA	Input Clutch - 1st design	.063/1.6		AR	Tan - 8T - OD: 3.230"-PLNI
N I	127700A	NA	Input Clutch - 2nd design	.063/1.6		AR	Grn - 30T - OD: 3.269-PLNI
N I	127702	NA	Forward	.079/2.0		AR	Tan - 10T - OD: 4.491"-PLNI
N I	127702-160	NA	Forward	.063/1.6		AR	Tan - 10T - OD: 4.491"-PLNI
N I	127704	NA	Center Support - external spline	.071/1.8		AR	Tan - 20T - ID: 3.736"-PLNI
N I	127704A155	NA	Center Support - late external spline	.061/1.55		AR	HEG - 35T -ID: 3.779"-PLNI
N I	127706	NA	Low / Reverse	.079/2.0		AR	Tan - 21T - OD: 5.041"-PLNI
N I	127706-160	NA	Low / Reverse - thin	.063/1.6		AR	Tan - 21T - OD: 5.041"-PLNI

STEEL CLUTCHES

ILL	ALTO No.	REF No.	Description	Spec	Year	Qty	Notes
N I	127701	NA	Input Clutch - 1st design	.055/1.4		AR	20T - ID: 2.520"
N I	127701A	NA	Input Clutch - 2nd design	.055/1.4		AR	20T - ID: 2.560"
N I	127703	NA	Forward - 8 spline	.079/2.0		AR	8T - ID: 3.750"
N I	127703A200	NA	Forward - 30 spline	.079/2.0		AR	30T - ID: 3.750"
N I	127703A140	NA	Forward - 30 spline selective	.055/1.4		AR	30T - ID: 3.750"
N I	127705	NA	Center Support - internal spline	.079/2.0		AR	20T - OD: 4.450"
N I	127705-140	NA	Center Support - internal spline	.055/1.4		AR	20T - OD: 4.450"
N I	127707	NA	Low / Reverse	.079/2.0		AR	12T - ID: 4.414"
N I	127707-140	NA	Low / Reverse	.055/1.4		AR	12T - ID: 4.414"

FILTERS

ILL	ALTO No.	REF No.	Description	Spec	Year	Qty	Notes
N I	127940	35303-97501	Filter			1	Terios

BANDS

ILL	ALTO No.	REF No.	Description	Spec	Year	Qty	Notes
N I	127950	NA	Band			1	Terios

DAIHATSU, TOYOTA MINI

DAIHATSU A4LB-1, TOYOTA U540E

1997-On

KITS

*Add Suffix SK for Super Kit

ILL	Description	Years	Friction Module	Steel Module	Overhaul Kit	Banner Kit	Master Kit
KT	Rebuilding Kit without Molded Pistons	97-On	127752A	127753A	127802	127903LS	127903
KT	Rebuilding Kit with Molded Pistons - A4LB-1	97-On	127752A	127753A	127802A	127903ALS	127903A
KT	Rebuilding Kit with Molded Pistons - U540E	97-On	127752A	127753A	127802B	127903BLS	127903B

FRICTION CLUTCHES

ILL	ALTO No.	REF No.	Description	Spec	Year	Qty	Notes
N I	127710-157	NA	Forward	.062/1.57	97-On	4	HEG - 30T - OD: 4.765" - SB
N I	127712-152	NA	Input	.060/1.52	97-On	6	HEG - 30T - OD: 3.369" - PLNI
N I	127714-147	NA	Low / Reverse	.058/1.47	97-On	4	HEG - 30T - OD: 5.436" - WF
N I	127716-170	NA	Center Support	.067/1.7	97-On	2	HEG - 30T - OD: 4.963" - SB
N I	127718-170	NA	Overdrive Brake	.067/1.7	97-On	5	HEG - 30T - OD: 5.196" - SB

STEEL CLUTCHES

ILL	ALTO No.	REF No.	Description	Spec	Year	Qty	Notes
N I	127711-200	NA	Forward	.079/2.01	97-On	3	30T - ID: 4.189"
N I	127713-200	NA	Input	.078/1.98	97-On	5	20T - ID: 2.675"
N I	127715-183	NA	Low / Reverse	.072/1.83	97-On	4	13T - ID: 4.490"
N I	127717-203	NA	Center support	.080/2.03	97-On	3	30T - ID: 4.487"
N I	127719-100	NA	Overdrive Brake	.039/0.99	97-On	5	13T - ID: 4.493"

FILTERS

ILL	ALTO No.	REF No.	Description	Spec	Year	Qty	Notes
N I	127940	35303-97501	Filter - Terios		97-On	1	
N I	127940A	35303-67206	Filter - Sirion		97-On	1	
N I	127942	NA	Filter - U540		97-On	1	

BANDS

ILL	ALTO No.	REF No.	Description	Spec	Year	Qty	Notes
N I	127950	NA	Band		97-On	1	

PISTONS

ILL	ALTO No.	REF No.	Description	Spec	Year	Qty	Notes
N I	127670	NA	Piston Kit - A4LB-1		97-On	1	Contains 6 pistons
N I	127671	NA	Piston Kit - U540E		97-On	1	Contains 6 pistons
N I	127300	NA	Piston - Input Apply		97-On	1	
N I	127300A	NA	Piston - Input Balance		97-On	1	
N I	127301	NA	Piston - Low/Reverse - A4LB-1	28mm (Height)	97-On	1	
N I	127301A	NA	Piston - Low/Reverse - U540E	25mm (Height)	97-On	1	
N I	127302	NA	Piston - Center Support Apply		97-On	1	
N I	127302A	NA	Piston - Center Support Balance		97-On	1	
N I	127303	NA	Piston - Overdrive Brake		97-On	1	

MITSUBISHI PAJERO MINI

R4A11 / R4A12

2000-11

KITS

*Add Suffix SK for Super Kit

ILL	Description	Years	Friction Module	Steel Module	Overhaul Kit	Banner Kit	Master Kit
KT	Rebuilding Kit	00-11	127752B	127753B	TBA	TBA	TBA

FRICTION CLUTCHES

ILL	ALTO No.	REF No.	Description	Spec	Year	Qty	Notes
N I	127720-170	MR357134	Forward Clutch	.067/1.70	00-11	3	36T - OD: 4.527"
N I	127720-170	MR357134	Reverse Clutch	.067/1.70	00-11	4	36T - OD: 4.527"
N I	127724-190	MR357138	Low/Reverse Clutch	.075/1.91	00-11	5	48T - OD: 5.355"
N I	127726-185	MR357745	End Clutch	.073/1.85	00-11	5	34T - OD: 3.910"

STEEL CLUTCHES

ILL	ALTO No.	REF No.	Description	Spec	Year	Qty	Notes
N I	127721-300	MB936480	Forward Clutch	.118/3.00	00-11	3	20T - ID: 3.740"
N I	127723-140	MB936479	Reverse Clutch	.055/1.40	00-11	4	20T - ID: 3.743"
N I	127725-140	MD729290	Low/Reverse Clutch- R4A12	.055/1.40	00-11	5	12T - ID: 4.940"
N I	127725-180	MD723019	Low/Reverse Clutch- R4A11	.071/1.80	00-11	4	12T - ID: 4.940"
N I	127727-080	MR317187	End Clutch- R4A12	.032/0.81	00-11	3	34T - ID: 3.531"
N I	127727-400	MR317188	End Clutch- R4A11	.157/3.99	00-11	1	34T - ID: 3.531"

FILTERS

ILL	ALTO No.	REF No.	Description	Spec	Year	Qty	Notes
N I	127944	MR567673	Filter		00-11	AR	

FORD DIFFERENTIAL

-

-

FRICTION CLUTCHES

ILL	ALTO No.	REF No.	Description	Spec	Year	Qty	Notes
N I	049720A235	B9AZ-4945A	Antique rear differential Carbonite®	.093/2.36	59-On	AR	Cbn - 45T - OD: 5.250" - WF
N I	023716A160	C8OZ-4945B	8.8" Ring Gear	.063/1.6	68-On	AR	HEG - 46T - OD: 4.887 - WF
N I	023718A200	C8OZ-4A325B	8.8" Ring Gear - 1 sided external tabs	.082/2.08	68-On	AR	HEG - 4 tab - ID: 3.955" PL
N I	399700	E4DZ-4947A-F	7.5" Ring Gear external tabs	.094/2.39	79-On	AR	HEG - 2 tab - ID: 2.080" - SM
N I	NA	F3AZ-4947A-F	8.8" ring Gear (longer external tab)	.098/2.49	92-98	AR	Order 399702A (retro fits)
N I	399702A	F3AZ-4947A-F	8.8" ring Gear (shorter external tab)	.098/2.49	92-On	AR	HEG - 2 tab - ID: 2.080" SM
N I	399716	F3AZ-4947A-F	9.75", 10.25", 10.5" ring Gear	.099/2.51	92-On	AR	HEG - 2 tab - ID: 2.372" SM

STEEL CLUTCHES

ILL	ALTO No.	REF No.	Description	Spec	Year	Qty	Notes
N I	399705-130	NA	Antique rear differential external tab	.051/1.3	59-On	AR	5 tab - ID: 3.895"
N I	023717	C8OZ-4947A	8.8" Ring Gear	.050/1.27	68-On	AR	4 tab - ID: 3.955"
N I	399701	E4DZ-4947A-S	7.5" Ring Gear internal spline	.065/1.65	79-On	AR	23T - OD: 3.000"
N I	399703	F3AZ-4947A-S	8.8" Ring Gear internal spline		92-On	AR	23T - OD: 3.363"
N I	399715	F3AZ-4947A-S	9.75", 10.25", 10.5" Ring Gear	.069/1.75	03-On	AR	26T - OD: 3.898"

LENCO RACING

-

-

FRICTION CLUTCHES

ILL	ALTO No.	REF No.	Description	Spec	Year	Qty	Notes
N I	011740	NA	Friction - 51 tooth design	.098/2.5	ALL	AR	Red - 51T - OD: 5.318" - SM
N I	023744	NA	Friction - 45 tooth design	.063/1.6	ALL	AR	Red - 45T - OD: 5.251" - SM
N I	023744UP10	NA	Friction - 45 tooth design (10/Pack)	.063/1.6	ALL	AR	RED EAGLE
N I	028742	NA	Friction - 62 tooth design	.063/1.6	ALL	AR	Red - 62T - OD: 6.700" - SM
N I	028742A155	NA	Friction - 62 tooth design	.063/1.6	ALL	AR	Red - 62T - OD: 6.700" - PL
N I	028742K	NA	Friction - 62 tooth design	.063/1.6	ALL	OPT	Kev - 62T - OD: 6.700" - PLNI

STEEL CLUTCHES

ILL	ALTO No.	REF No.	Description	Spec	Year	Qty	Notes
N I	021701	NA	Steel - use with 011740	.065/1.65	ALL	AR	8T - ID: 4.070"
N I	021701-183	NA	Steel - use with 011740	.072/1.83	ALL	AR	8T - ID: 4.070"

VOITH

D1WA

REBUILDING KIT

Description	Years	Friction Module	Steel Module	Overhaul Kit	Banner Kit	Master Kit
Clutch Modules D864.3E		125752	125753			
Overhaul Kit Models 851, 851.2, 851.3, 854.3, 863, 863.3 replaces 59.3597.10				125800		

FRICTION CLUTCHES

ILL	ALTO No.	REF No.	Description	Spec	Year	Qty	Notes
N I	125706-320	58.4150.12 *	Input - US 3.2mm	.126/3.2		4	HEG - 50T - OD: 10.15" - PLNI
N I		68.300113	Also 150.00411510				
N I	125706-320	58.4150.12 *	SK-Speed clutch	.126/3.2		4	HEG - 50T - OD: 10.15" - PLNI
N I	125706-320	58.4150.12 *	Lock-Up US 3.2mm	.126/3.2		4	HEG - 50T - OD: 10.15" - PLNI
N I	125706-300	58.4150.12 *	Input, Lock-Up selective Non-US 3.0mm	.118/3.0		AR	HEG - 50T - OD: 10.15" - PLNI
		NA	* Note: Some Non-US Units may require 3.0mm thickness frictions				
N I	125704	58.2460.13	Pump Brake	.118/3.0		2	Tan - 50T - OD: 10.15" - PLNI
N I	125708	50.7147.16	Reverse	.136/3.45		6	HEG - 63T - OD: 12.50" - CGSM
		50.7147.17					
N I	125714	58.2250.12	Torque Converter	.138/3.5		3	Brz - 63T - OD: 12.51" - Sprl
		58.2250.13					

STEEL CLUTCHES

ILL	ALTO No.	REF No.	Description	Spec	Year	Qty	Notes
N I	125707	50.7920.10	Input	.079/2.0		3-6	12T - ID: 8.173"
N I	125707-300	NA	Input - selective	.118/3.0		1	12T - ID: 8.173"
N I	125707-350	52.6306.10	Input	.138/3.5		6	12T - ID: 8.173"
N I	125705	50.7715.20	Input - backing	.118/3.0		2-3	12T - ID: 8.173"
N I	125705A300	52.6303.10	Input - backing (2 short teeth)	.118/3.0		1-2	12T - ID: 8.173"
N I	125707	50.7920.10	Lock-up	.079/2.0		1	12T - ID: 8.173"
N I	125707-350	52.6306.10	Lock-up	.138/3.5		3	12T - ID: 8.173"
N I	125707-350	52.6306.10	Pump Brake	.138/3.5		2	12T - ID: 8.173"
N I	125705A300	52.6303.10	Pump Brake	.118/3.0		AR	12T - ID: 8.173" (2 Short Teeth)
N I	TBA	54.8208.10	Pump Brake - backing	.277/7.0		1	12T
N I	125709	54.9141.10	Reverse	.098/2.5		6	12T - ID: 10.41"
N I	125715	50.9743.13	Torque Converter	.098/2.5		4	12T - ID: 10.429"

PRESSURE PLATES

ILL	ALTO No.	REF No.	Description	Spec	Year	Qty	Notes
N I	125768	54.8208.10	Direct End Plate	.275/7.0		1	12T - ID: 11.023"

FILTER KITS

ILL	ALTO No.	REF No.	Description	Spec	Year	Qty	Notes
N I	FK125940	59.3255.10	Filter Kit Voith 851, 851.2, 851.3			1	filter, gasket, washers

GENERAL MOTORS

SATURN CVT 2002-On

VT20E, VT25E

KITS

*Add Suffix SK for Super Kit

ILL	Description	Years	Friction and Steel Module	Overhaul Kit	Banner Kit	Master Kit
KT	Rebuilding Kit	02-On	167750	167800	NA	167901

FRICTION CLUTCHES

ILL	ALTO No.	REF No.	Description	Spec	Year	Qty	Notes
			(All Clutches are 1 Sided Friction)				
N I	167700-150	24214072	Reverse - Internal Spline	.059/1.5	02-On	3	Heg - 36T - OD: 6.140"
N I	167701-150	24214073	Reverse - Externall Spline	.059/1.5	02-On	3	Heg - 32T - ID: 5.055"
N I	167702-150	24214069	Input - Internal Spline	.059/1.5	02-On	3	Heg - 36T - OD: 6.142"
N I	167703-150	24214070	Input - Externall Spline	.059/1.5	02-On	3	Heg - 36T - ID: 5.055"

PRESSURE PLATES

ILL	ALTO No.	REF No.	Description	Spec	Year	Qty	Notes
N I	TBA	NA	Reverse		02-On	AR	15T
N I	TBA	NA	Input		02-On	AR	18T

FILTERS

ILL	ALTO No.	REF No.	Description	Spec	Year	Qty	Notes
N I	167940	24226576	Filter		02-On	1	

MOLDED PISTONS

ILL	ALTO No.	REF No.	Description	Spec	Year	Qty	Notes
KT	167670	NA	Piston Kit		02-On	1	2 Pistons
N I	167300	NA	Piston - Forward		02-On	1	
N I	167301	NA	Piston - Reverse		02-On	1	

HARD PARTS

ILL	ALTO No.	REF No.	Description	Spec	Year	Qty	Notes
N I	167350	901033	Push Belt		02-On	1	

FORD

CTX1, CTX2 (CVT)

1990-On

KITS

*Add Suffix SK for Super Kit

ILL	Description	Friction Module	Steel Module	Overhaul Kit	Banner Kit	Master Kit
KT	Rebuilding Kit	082752	082753	082800	082901LS	082901

FRICTION CLUTCHES

ILL	ALTO No.	REF No.	Description	Spec	Year	Qty	Notes
N I	082700	NA	Clutch	.098/2.5	90-On	6	Red - 24T - OD: 6.605"-PLI
N I	082700SM	NA	Clutch	.098/2.5	90-On	6	Red - 24T - OD: 6.605"-SM

STEEL CLUTCHES

ILL	ALTO No.	REF No.	Description	Spec	Year	Qty	Notes
N I	082701	NA	Clutch	.098/2.5	90-On	6	8T - ID: 4.923"

FILTERS

ILL	ALTO No.	REF No.	Description	Spec	Year	Qty	Notes
N I	082940	6184137	Filter CTX 17mm tube		87-89	1	
N I	082942	87CT-7B155AB	Filter CVT 61mm tube		89-On	1	

FORD

CVT (CFT23 ZF) 2002-07

C-MAX, FOCUS

KITS

*Add Suffix SK for Super Kit

ILL	Description	Years	Friction Module	Steel Module	Overhaul Kit	Banner Kit	Master Kit
KT	Rebuilding Kit	02-07	193752A	193753A	193802	193903LS	193903

FRICTION CLUTCHES

ILL	ALTO No.	REF No.	Description	Spec	Year	Qty	Notes
N I	139702-150	NA	Reverse	.059/1.5	02-07	3	HEG - 30T - OD: 6.970"
N I	113700A	1055-270-069	Input	.062/1.57	02-07	3	HEG - 30T - OD: 5.627" - SB

STEEL CLUTCHES

ILL	ALTO No.	REF No.	Description	Spec	Year	Qty	Notes
N I	139703-180	1060-372-002	Reverse	.071/1.8	02-07	3	24T - ID: 5.200"
N I	113701-180	1055-374-030	Input	.071/1.8	02-07	3	24T - ID: 4.690"

FORD

CVT (CFT30 ZF)

2005-On

KITS

*Add Suffix SK for Super Kit

ILL	Description	Years	Friction Module	Steel Module	Overhaul Kit	Banner Kit	Master Kit
KT	Rebuilding Kit	05-On	193752	193753	193800	193901LS	193901

MISCELLANEOUS GASKETS & KIT COMPONENTS

ILL	ALTO No.	REF No.	Description	Spec	Year	Qty	Notes
N I	193816	5F9Z-7A191AA	Gasket, Pan	Cork/Rub	05-On	3	
N I	193818	5F9Z-7A191AA	Gasket, Case	Cork/Rub	05-On	3	

FRICTION CLUTCHES

ILL	ALTO No.	REF No.	Description	Spec	Year	Qty	Notes
N I	193700-200	5F9Z-7B164CA	Forward	.079/2.01	05-On	3	HEG - 30T - OD: 5.782" - PLNI
N I	192700-157	5F9Z-7B164AA	Reverse	.062/1.57	05-On	3	HEG - 30T - OD: 6.555" - PLNI

STEEL CLUTCHES

ILL	ALTO No.	REF No.	Description	Spec	Year	Qty	Notes
N I	193701-178	5F9Z-7B442AA	Forward	.070/1.78	05-On	3	30T - ID: 4.883"
N I	193703-180	5F9Z-7B442BA	Reverse	.071/1.80	05-On	3	30T - ID: 5.631"

PRESSURE PLATES

ILL	ALTO No.	REF No.	Description	Spec	Year	Qty	Notes
N I	TBA	5F9Z-7B066BA	Forward Clutch		05-On	1	
N I	193761	5F9Z-7B066CA	Reverse Clutch		05-On	1	

FILTERS

ILL	ALTO No.	REF No.	Description	Spec	Year	Qty	Notes
N I	193940	5F9Z-7A098B	Filter - Ford 500 & Freestyle		05-On	1	
N I	FK193940A	5F9Z-7B155Y	Freestyle Canister with Seals		05-On	1	

METAL CLAD SEALS

ILL	ALTO No.	REF No.	Description	Spec	Year	Qty	Notes
N I	193400	5F9Z-7F401AA	Front Pump		05-On	1	

AUDI / VW DSG

0BH (DQ500) 7 SPEED / 0BT / 0AW

2010-On

KITS

ILL	Description	Years	Friction Module	Steel Module	Overhaul Kit	Banner Kit	Master Kit
KT	Rebuilding Kit	10-On	211752A	211753A	TBA	TBA	TBA

FRICTION CLUTCHES

ILL	ALTO No.	REF No.	Description	Spec	Year	Qty	Notes
N I	211710-196	NA	Small	.077/1.96	10-On	6	OTHER - 34T - OD: 6.632"
N I	211712-196	NA	Large	.077/1.96	10-On	5	OTHER - 48T - OD: 8.408"

STEEL CLUTCHES

ILL	ALTO No.	REF No.	Description	Spec	Year	Qty	Notes
N I	211713-147	NA	Large	.058/1.47	10-On	6	30T - ID:7.629"
N I	211713-168	NA	Large	.066/1.68	10-On	4	30T - ID: 7.628"
N I	211715-150	NA	Small	.058/1.47	10-On	1	42T - ID: 5.542"
N I	211715-185	NA	Small	.073/1.85	10-On	7	42T - ID: 5.542"

FILTERS

ILL	ALTO No.	REF No.	Description	Spec	Year	Qty	Notes
N I	211942	0BH-325-183B	Filter VW/Audi 0BH		11-On	1	
N I	211942A	NA	Filter VW/Audi 0BT DQ500		11-On	1	

HARD PARTS

ILL	ALTO No.	REF No.	Description	Spec	Year	Qty	Notes
N I	211315	NA	Cover for Unit		11-On	1	

AUDI S-TRONIC DSG

0B5 (DL501) 7 SPEED AWD

2009-On

KITS

ILL	Description	Years	Friction Module	Steel Module	Overhaul Kit	Banner Kit	Master Kit
KT	Rebuilding Kit - with Molded Pistons	09-On	211752	211753	211800A	211901LS	211901
KT	Rebuilding Kit - without Molded Pistons	09-On	211752	211753	211800AX	211901XLS	211901X

FRICTION CLUTCHES

ILL	ALTO No.	REF No.	Description	Spec	Year	Qty	Notes
N I	211700-230	NA	2-4-6-Reverse	.090/2.29	09-On	6	HEG - 30T - OD: 5.868" - PLNl seg
N I	211702-236	NA	1-3-5-7 clutch	.093/2.36	09-On	5	HEG - 28T - OD: 8.210" - WF seg

STEEL CLUTCHES

ILL	ALTO No.	REF No.	Description	Spec	Year	Qty	Notes
N I	211701-200	NA	2-4-6-Reverse, waved	.079/2.01	09-On	6	30T - ID: 4.483"
N I	211703-198	NA	1-3-5-7 clutch, waved	.078/1.98	09-On	5	36T - ID: 7.008"
N I	211703-275	NA	1-3-5-7 apply clutch	.108/2.74	09-On	1	36T - ID: 7.008"

FILTERS

ILL	ALTO No.	REF No.	Description	Spec	Year	Qty	Notes
N I	211940	0B5-325-429E	Filter 0B5 S-Tronic 7SP 08+ Audi A4,A5,Q5,RS6 7Q		08-On	1	
N I	211940AS	0B5-325-330A	Filter 0B5 S-Tronic Cartridge filter with seal		09-On	1	

ELECTRONIC CONTROL COMPONENTS

ILL	ALTO No.	REF No.	Description	Spec	Year	Qty	Notes
N I	211500	50230	Solenoid- Cooler Flow		09-On	1	
N I	211501	50229	Solenoid- Main Line		09-On	1	
N I	211502	50228	Solenoid- CL1, CL2		09-On	1	

MOLDED PISTONS

ILL	ALTO No.	REF No.	Description	Spec	Year	Qty	Notes
KT	211670	NA	Piston Kit		09-On	1	2 pistons
N I	211300	NA	Input		09-On	1	
N I	211301	NA	Reverse		09-On	1	

HARD PARTS

ILL	ALTO No.	REF No.	Description	Spec	Year	Qty	Notes
N I	211570	0B5398048C	0B5 Repair kit for mechatronics		09-On	1	

AUDI
DL308

.

KITS

ILL	Description	Years	Friction Module	Steel Module	Overhaul Kit	Banner Kit	Master Kit
N I	Rebuilding Kit		211752C	211753C	NA	NA	NA

FRICTION CLUTCHES

ILL	ALTO No.	REF No.	Description	Spec	Years	Qty	Notes
N I	211720-203	XP169230751	Friction 2 Sided	.080/2.03		8	G3BLK - 30T - ID: 5.158"
N I	211720A255	XP164420757	Friction 1 Sided	.100/2.54		4	G3BLK - 30T - ID: 5.158"

STEEL CLUTCHES

ILL	ALTO No.	REF No.	Description	Spec	Years	Qty	Notes
N I	211721-170	XP166630743	Internal Spline	.067/1.70		10	G3BLK - 30T - OD: 6.466"

AUDI

DUAL SHAFT VW/AUDI DRY
0AM (DQ200)- 2009-On

KITS

Description	Friction Module	Steel Module	Overhaul Kit	Banner Kit	Master Kit
Overhaul Kit	NL	NL	217800A	NL	NL

MISCELLANEOUS GASKETS & KIT COMPONENTS

ILL	ALTO No.	Description	Spec	Year	Qty	Notes
N I	A50029	Valve Body Seal		09-On	1	Molded Rubber

BORG WARNER

DUAL SHAFT VW/AUDI

02E (DQ250) DSG TWIN CLUTCH 6 SPEED FWD

KITS

Description	Years	Friction Module	Steel Module	Overhaul Kit	Banner Kit	Master Kit
Rebuilding Kit - With 1 Molded Piston	03-On	198752	198753	198800A	198901LS	198901

FRICTION CLUTCHES

ILL	ALTO No.	REF No.	Description	Spec	Year	Qty	Notes
N I	198700-230	NA	1st, 3rd, 5th, Reverse	.091/2.31	03-On	4	HEG - 28T - OD: 7.570" - WF
N I	198702-180	NA	2nd, 4th, 6th	.071/1.8	03-On	5	HEG - 32T - OD: 5.429" - WF

STEEL CLUTCHES

ILL	ALTO No.	REF No.	Description	Spec	Year	Qty	Notes
N I	198701-230	NA	1st, 3rd, 5th, Reverse	.091/2.31	03-On	5	30T - ID: 6.449"
N I	198703-150	NA	2nd, 4th, 6th	.059/1.5	03-On	6	26T - ID: 4.154"

FILTERS

ILL	ALTO No.	REF No.	Description	Spec	Year	Qty	Notes
N I	198940	NA	Filter 02E, Internal		03-On	1	
N I	198940A	02E-325-429D	Filter 02E, Internal		05-On	1	
N I	198942	NA	Filter 02E, External		03-On	1	

ELECTRONIC CONTROL COMPONENTS

ILL	ALTO No.	REF No.	Description	Spec	Year	Qty	Notes
N I	198501	50221	Solenoid, VFS		03-On	2	
N I	198502	50223	Solenoid, VBS NH		03-On	2	
N I	198503	50222	Solenoid, VBS NL		03-On	2	
N I	198504	NA	Speed Sensor	OEM	03-On	1	

PISTONS

ILL	ALTO No.	REF No.	Description	Spec	Year	Qty	Notes
N I	198308	02E-301-205C	Front Cover		03-On	1	

HARD PARTS

ILL	ALTO No.	REF No.	Description	Spec	Year	Qty	Notes
N I	198350	NA	Dual Mass Flywheel - Diesel		07-On	1	

FIAT
JAPAN ECVT
1993-On

KITS

*Add Suffix SK for Super Kit

ILL	Description	Years	Friction Module	Steel Module	Overhaul Kit	Banner Kit	Master Kit
KT	Rebuilding Kit - Fiat Punto	93-On	186752	186753	186800	186901LS	186901

FRICTION CLUTCHES

ILL	ALTO No.	REF No.	Description	Spec	Year	Qty	Notes
N I	186700-182	NA	Input	.072/1.83	93-On	3	Heg - 30T - OD: 6.020" - SB
N I	186702-163	NA	Reverse	.064/1.63	93-On	2	Heg - 44T - OD: 5.650" - PL

STEEL CLUTCHES

ILL	ALTO No.	REF No.	Description	Spec	Year	Qty	Notes
N I	186701-160	NA	Input	.063/1.60	93-On	1	36T - ID: 4.354"
N I	186701-197	NA	Input	.078/1.98	93-On	1	36T - ID: 4.354"
N I	186703-201	NA	Reverse	.079/2.00	93-On	2	15T - ID: 4.605"

PRESSURE PLATES

ILL	ALTO No.	REF No.	Description	Spec	Year	Qty	Notes
N I	186760	NA	Input	.071/1.80	93-On	1	with step

GETRAG DCT

6DCT450 / MPS6 6 SPEED

2008-On

KITS

ILL	Description	Years	Friction Module	Steel Module	Overhaul Kit	Banner Kit	Master Kit
KT	Rebuilding Kit 6DCT450/MPS6 with Molded Pistons	08-On	209752	209753	209800	209901LS	209901
KT	Rebuilding Kit 6DCT450/MPS6 without Molded Pistons	08-On	209752	209753	209800X	209901XLS	209901X

FRICTION CLUTCHES

ILL	ALTO No.	REF No.	Description	Spec	Year	Qty	Notes
N I	209700-188	NA	1-3-5-Reverse Clutch, DCT450 (Large OD)	.074/1.88	08-On	4-5	HEG - 34T - ID: 5.585" - DR
N I	209702-185	NA	2-4-6 Clutch, DCT450	.073/1.85	08-On	4-5	HEG - 32T - ID: 5.585" - DR

STEEL CLUTCHES

ILL	ALTO No.	REF No.	Description	Spec	Year	Qty	Notes
N I	209701-198	NA	1-3-5-Reverse Clutch	.078/1.98	08-On	4	42T - OD: 6.812"
N I	209701-216	NA	1-3-5-Reverse Clutch	.086/2.20	08-On	1	42T - OD: 6.812"
N I	209701-120	NA	1-3-5-Reverse Clutch PowerPack®	.047/1.19	08-On	5	42T - OD: 6.812"
N I	209701-140	NA	1-3-5-Reverse Clutch selective	.055/1.40	08-On	AR	42T - OD: 6.812"
N I	209701-160	NA	1-3-5-Reverse Clutch selective	.063/1.60	08-On	AR	42T - OD: 6.813"
N I	209701-180	NA	1-3-5-Reverse Clutch selective	.071/1.80	08-On	AR	42T - OD: 6.813"
N I	209701-198	NA	2-4-6 Clutch	.078/1.98	08-On	4	42T - OD: 6.812"
N I	209701-216	NA	2-4-6 Clutch	.085/2.16	08-On	1	42T - OD: 6.812"
N I	209701-120	NA	2-4-6 Clutch PowerPack	.047/1.19	08-On	5	42T - OD: 6.812"
N I	209701-140	NA	2-4-6 Clutch selective	.055/1.40	08-On	AR	42T - OD: 6.812"
N I	209701-160	NA	2-4-6 Clutch selective	.063/1.60	08-On	AR	42T - OD: 6.812"
N I	209701-180	NA	2-4-6 Clutch selective	.071/1.80	08-On	AR	42T - OD: 6.812"

FILTERS

ILL	ALTO No.	REF No.	Description	Spec	Year	Qty	Notes
N I	209940	7M5R-7G186AC	Filter- DCT450 only		08-On	1	
N I	209944	7M5R-6C631AD	Filter- DCT450,470		08-On	1	External
N I	209944A	NA	Filter- DCT450,470		08-On	1	Inner Cartridge for Assembly

SNAP RINGS

ILL	ALTO No.	REF No.	Description	Spec	Year	Qty	Notes
N I	209253	7M5R7570AD	Clutch Hub to Cover		08-On	1	

MOLDED PISTONS

ILL	ALTO No.	REF No.	Description	Spec	Year	Qty	Notes
N I	209670	NA	Piston Kit		08-On	1	4 pistons
N I	209300	NA	2-4-6 Clutch		08-On	2	
N I	209301	NA	1-3-5-Reverse Clutch		08-On	2	
N I	209315	NA	Cover- DCT450		08-On	1	

GETRAG DCT

6DCT470 / SPS6 6 SPEED

2008-On

KITS

ILL	Description	Years	Friction Module	Steel Module	Overhaul Kit	Banner Kit	Master Kit
KT	Rebuilding Kit 6DCT470/SPS6 with Molded Pistons	08-On	209752	209753	209802	209903LS	209903
KT	Rebuilding Kit 6DCT470/SPS6 without Molded Pistons	08-On	209752	209753	209802X	209903XLS	209903X

FRICTION CLUTCHES

ILL	ALTO No.	REF No.	Description	Spec	Year	Qty	Notes
N I	209700-188	NA	2-4-6 Clutch, DCT470 (Large OD)	.074/1.88	08-On	4-5	HEG - 34T - ID: 5.585" - DR
N I	209702-185	NA	1-3-5-Reverse Clutch, DCT470	.073/1.85	08-On	4-5	HEG - 32T - ID: 5.585" - DR

STEEL CLUTCHES

ILL	ALTO No.	REF No.	Description	Spec	Year	Qty	Notes
N I	209701-198	NA	1-3-5-Reverse Clutch	.078/1.98	08-On	4	42T - OD: 6.812"
N I	209701-216	NA	1-3-5-Reverse Clutch	.086/2.20	08-On	1	42T - OD: 6.812"
N I	209701-120	NA	1-3-5-Reverse Clutch PowerPack®	.047/1.19	08-On	5	42T - OD: 6.812"
N I	209701-140	NA	1-3-5-Reverse Clutch selective	.055/1.40	08-On	AR	42T - OD: 6.812"
N I	209701-160	NA	1-3-5-Reverse Clutch selective	.063/1.60	08-On	AR	42T - OD: 6.813"
N I	209701-180	NA	1-3-5-Reverse Clutch selective	.071/1.80	08-On	AR	42T - OD: 6.813"
N I	209701-198	NA	2-4-6 Clutch	.078/1.98	08-On	4	42T - OD: 6.812"
N I	209701-216	NA	2-4-6 Clutch	.085/2.16	08-On	1	42T - OD: 6.812"
N I	209701-120	NA	2-4-6 Clutch PowerPack	.047/1.19	08-On	5	42T - OD: 6.812"
N I	209701-140	NA	2-4-6 Clutch selective	.055/1.40	08-On	AR	42T - OD: 6.812"
N I	209701-160	NA	2-4-6 Clutch selective	.063/1.60	08-On	AR	42T - OD: 6.812"
N I	209701-180	NA	2-4-6 Clutch selective	.071/1.80	08-On	AR	42T - OD: 6.812"

FILTERS

ILL	ALTO No.	REF No.	Description	Spec	Year	Qty	Notes
N I	209942	7U3R-7G186AB	Filter- DCT 470 only		08-On	1	Internal
N I	209944	7M5R-6C631AD	Filter- DCT 450,470		08-On	1	External
N I	209944A	NA	Filter- DCT 450,470		08-On	1	Inner Cartridge for Assembly

SNAP RINGS

ILL	ALTO No.	REF No.	Description	Spec	Year	Qty	Notes
N I	209253	7M5R7570AD	Clutch Hub to Cover		08-On	1	

MOLDED PISTONS

ILL	ALTO No.	REF No.	Description	Spec	Year	Qty	Notes
N I	209670	NA	Piston Kit		08-On	1	4 pistons
N I	209300	NA	2-4-6 Clutch		08-On	2	
N I	209301	NA	1-3-5-Reverse Clutch		08-On	2	
N I	209316	NA	Cover- DCT470		08-On	1	

HONDA
CVT
1996-On

KITS

*Add Suffix SK for Super Kit

ILL	Description	Years	Friction Module	Steel Module	Overhaul Kit	Banner Kit	Master Kit
KT	Rebuilding Kit - M4VA	96-00	118752	118753	118800	118901LS	118901
KT	Rebuilding Kit - MLYA, SLYA	01-05	118752A	118753A	118802	118901ALS	118901A
KT	Rebuilding Kit - SZCA	03-05	118752	118753	118806	118903LS	118903
KT	Rebuilding Kit - SMVA, SWRA	02-On	118752	118753A	118806A	118903ALS	118903A
KT	Rebuilding Kit - MHTA	01-06	118752A	118753A	118804	118905LS	118905

MISCELLANEOUS GASKETS & KIT COMPONENTS

ILL	ALTO No.	REF No.	Description	Spec	Year	Qty	Notes
N I	118816	21814-P4V-000	Gasket, Oil Pan	Cork/Rub	96-On	1	
N I	TBA	21813-P4V-000	Gasket, Side		96-On	1	
N I	TBA	21812-P4V-000	Gasket, Case		96-On	1	

FRICTION CLUTCHES

ILL	ALTO No.	REF No.	Description	Spec	Year	Qty	Notes
N I	058710A	Various	Forward	.075/1.9	96-On	2	SAS - 38T - OD: 4.325" - PL
N I	058720G	Various	Low	.075/1.9	96-On	4	HEG - 41T - OD: 4.558" - PL
N I	118704	NA	Reverse Brake	.078/2.0	96-On	2-3	HEG - 24T - OD: 5.709" - PL

FRICTION CLUTCHES - HI-PERFORMANCE - Red Eagle®

ILL	ALTO No.	REF No.	Description	Spec	Year	Qty	Notes
N I	058740-190	NA	Forward	.075/1.9	96-On	2	Red - 41T - OD: 4.323" - SM

STEEL CLUTCHES

ILL	ALTO No.	REF No.	Description	Spec	Year	Qty	Notes
N I	058711	Various	Forward	.078/2.0	96-On	2	8T - ID: 3.230"
N I	058723-230	Various	Low	.091/2.3	96-On	5	24T - ID: 3.440"
N I	118705	NA	Reverse Brake	.076/1.9	96-On	2	12T - ID: 5.173"
N I	118705-134	NA	Reverse Brake	.053/1.34	96-On	2	12T - ID: 5.173"

STEEL CLUTCHES - HI-PERFORMANCE - Red Eagle®

ILL	ALTO No.	REF No.	Description	Spec	Year	Qty	Notes
N I	058711K200	NA	Forward	.078/2.0	96-On	2	8T - ID: 3.230"

FILTERS

ILL	ALTO No.	REF No.	Description	Spec	Year	Qty	Notes
N I	118940	25420-P4V-000	Filter - Cartridge		96-On	1	
N I	118944	25420-P4V-003	Filter - Flat type with pan		96-On	1	
N I	118946	25420-PHT-003	Filter -MHTA, SZCA		01-06	1	
N I	118946A	25420-PLY-003	Filter - SLYA		96-On	1	
N I	118946B	25420-PWR-003	Filter - SZCA, SWRA		96-On	1	
N I	118946C	25450-PWR-003	Filter -Cartridge, SWRA		96-On	1	

METAL CLAD SEALS

ILL	ALTO No.	REF No.	Description	Spec	Year	Qty	Notes
N I	118400	91207-P4V-000	Flywheel Housing	35mm	96-On	1	
N I	TBA	91205-PL3-A01	Left Axle	56mm	96-On	1	
N I	058402D	91206-689-005	Right Axle	76mm	96-On	1	

HARD PARTS

ILL	ALTO No.	REF No.	Description	Spec	Year	Qty	Notes
N I	118350	901055	CVT Push belt OEM		96-On	1	
		901068					

MERCEDES

722.8 ECVT 2004-On

A CLASS, B CLASS

KITS

*Add Suffix SK for Super Kit

ILL	Description	Years	Friction Module	Steel Module	Overhaul Kit	Banner Kit	Master Kit
KT	Rebuilding Kit- OE style without pistons	04-On	076752	076753	076800AX	076901LS	076901

FRICTION CLUTCHES

ILL	ALTO No.	REF No.	Description	Spec	Year	Qty	Notes
N I	076700-178	NA	Forward	.070/1.78	04-On	3	HEG - 46T - OD: 7.090" - SB
N I	076702-218	NA	Reverse	.086/2.18	04-On	3	HEG - 36T - OD: 7.690" - PLNI

STEEL CLUTCHES

ILL	ALTO No.	REF No.	Description	Spec	Year	Qty	Notes
N I	076701-140	NA	Forward	.055/1.40	04-On	3	48T - ID: 6.100"
N I	076703-120	NA	Reverse	.047/1.20	04-On	3	42T - ID: 5.740"

FILTERS

ILL	ALTO No.	REF No.	Description	Spec	Year	Qty	Notes
N I	076940	NA	Filter		04-On	1	

HARD PARTS

ILL	ALTO No.	REF No.	Description	Spec	Year	Qty	Notes
N I	076350	901063	Push Belt		04-On	1	

MERCEDES

724.0 DCT 2012-On

A CLASS, B CLASS

KITS

*Add Suffix SK for Super Kit

ILL	Description	Years	Friction Module	Steel Module	Overhaul Kit	Banner Kit	Master Kit
KT	Rebuilding Kit	12-On	076752A	076753A	076802AX	076903XLS	076903X

FRICTION CLUTCHES

ILL	ALTO No.	REF No.	Description	Spec	Year	Qty	Notes
N I	076710-244	NA	Forward	.096/2.44	12-On	4	HEG - 36T - OD: 6.426"
N I	076712-244	NA	Reverse	.096/2.44	12-On	4	HEG - 40T - OD: 8.470"

STEEL CLUTCHES

ILL	ALTO No.	REF No.	Description	Spec	Year	Qty	Notes
N I	076711-193	NA	Forward	.076/1.93	12-On	4	36T - ID: 5.402"
N I	076713-193	NA	Reverse	.076/1.93	12-On	4	54T - ID: 7.602"

FILTERS

ILL	ALTO No.	REF No.	Description	Spec	Year	Qty	Notes
N I	076942	246-377-1400	Filter		12-On	1	
N I		246-377-2400					

MITSUBISHI

F1C1 CVT

2007-On

KITS

*Add Suffix SK for Super Kit

ILL	Description	Years	Friction Module	Steel Module	Overhaul Kit	Banner Kit	Master Kit
KT	Rebuilding Kit	07-On	123752B	123753B	123802	123903LS	123903

FRICTION CLUTCHES

ILL	ALTO No.	REF No.	Description	Spec	Year	Qty	Notes
N I	123710-145	NA	Forward	.057/1.45	07-On	4	HEG - 30T - OD: 5.335" - PL
N I	123708	45422-39000	Reverse	.067/1.7	07-On	2	Tan - 30T - OD: 5.357" - PL

STEEL CLUTCHES

ILL	ALTO No.	REF No.	Description	Spec	Year	Qty	Notes
N I	123711-090	NA	Forward	.035/0.09	07-On	4	15T - ID: 4.970"
N I	123709	NA	Reverse	.099/2.5	07-On	2	20T - ID: 4.655"

NISSAN

RE0F06A CVT 1996-On

Primera, Tino, Bluebird, Sunny (NonUS)

KITS

*Add Suffix SK for Super Kit

ILL	Description	Friction Module	Steel Module	Overhaul Kit	Banner Kit	Master Kit
KT	Rebuilding Kit with 2.0mm Steels	181752B	181753B	181802	181903LS	181903
KT	Rebuilding Kit with 1.6mm Steels	181752B	181753C	181802	181903LS	181903A

FRICTION CLUTCHES

ILL	ALTO No.	REF No.	Description	Spec	Year	Qty	Notes
N I	181704-163	31532-8E010	Forward	.064/1.63	96-On	AR	HEG - 36T - OD: 5.046" - PLNI
N I	181706-142	31532-8E011	Reverse	.056/1.42	96-On	AR	HEG - 30T - OD: 6.813" - PL

STEEL CLUTCHES

ILL	ALTO No.	REF No.	Description	Spec	Year	Qty	Notes
N I	181705-200	NA	Forward	.079/2.01	96-On	AR	18T - ID: 4.257"
N I	181705-160	31666-8E001	Forward	.063/1.60	96-On	AR	18T - ID: 4.257"
N I	181707-200	NA	Reverse	.079/2.01	96-On	AR	12T - ID: 6.166"
N I	181707-160	31536-8E002	Reverse	.063/1.60	96-On	AR	12T - ID: 6.166"

FILTERS

ILL	ALTO No.	REF No.	Description	Spec	Year	Qty	Notes
N I	181940	NA	Filter - Primera			1	

ELECTRONIC CONTROL COMPONENTS

ILL	ALTO No.	REF No.	Description	Spec	Year	Qty	Notes
N I	176351	31935-8E007	Speed Sensor		00-On	1	
N I	181501	31947-8E002	Step Motor RE0F06A CVT			1	

NISSAN / FIAT RE0F08A

JF009E

2000-2012

KITS

*Add Suffix SK for Super Kit

ILL	Description	Years	Friction Module	Steel Module	Overhaul Kit	Banner Kit	Master Kit
KT	Rebuilding Kit - without Molded Pistons	00-12	TBA	TBA	181808	TBA	TBA
KT	Rebuilding Kit - without Molded Pistons	00-12	TBA	TBA	181808X	TBA	TBA

FRICTION CLUTCHES

ILL	ALTO No.	REF No.	Description	Spec	Year	Qty	Notes
N I	TBA	NA	Reverse		00-12	AR	
N I	TBA	NA	Forward		00-12	AR	

STEEL CLUTCHES

ILL	ALTO No.	REF No.	Description	Spec	Year	Qty	Notes
N I	TBA	NA	Reverse		00-12	AR	
N I	TBA	NA	Forward		00-12	AR	

FILTERS

ILL	ALTO No.	REF No.	Description	Spec	Year	Qty	Notes
N I	181941	NA	RE0F08A/B, JF009E VERSA FWD		00-12	1	

ELECTRONIC CONTROL COMPONENTS

ILL	ALTO No.	REF No.	Description	Spec	Year	Qty	Notes
N I	176351	31935-8E007	Speed Sensor		00-On	1	

MOLDED PISTONS

ILL	ALTO No.	REF No.	Description	Spec	Year	Qty	Notes
KT	181674	NA	Piston Kit		00-12	1	

NISSAN

RE0F21A CVT

2000-2009

KITS

*Add Suffix SK for Super Kit

ILL	Description	Years	Friction Module	Steel Module	Overhaul Kit	Banner Kit	Master Kit
KT	Rebuilding Kit - with Molded Pistons	00-09	176752	176753A	176802	176903LS	176903
KT	Rebuilding Kit - without Molded Pistons	00-09	176752	176753A	176802X	176903XLS	176903X

FRICTION CLUTCHES

ILL	ALTO No.	REF No.	Description	Spec	Year	Qty	Notes
N I	176700-160	NA	Reverse	.063/1.6	00-09	2	HEG - 44T - OD: 5.672"
N I	176702-180	NA	Forward / Input	.071/1.8	00-09	3	HEG - 30T - OD: 5.138"

STEEL CLUTCHES

ILL	ALTO No.	REF No.	Description	Spec	Year	Qty	Notes
N I	176701-200	NA	Reverse	.078/2.0	00-09	2	15T - ID: 4.604"
N I	176703-160	NA	Forward / Input	.063/1.6	00-09	2	36T - ID: 4.350"
N I	176703-180	NA	Forward / Input	.071/1.8	00-09	1	36T - ID: 4.350"

ELECTRONIC CONTROL COMPONENTS

ILL	ALTO No.	REF No.	Description	Spec	Year	Qty	Notes
N I	176351	31935-8E007	Speed Sensor		00-09	1	

MOLDED PISTONS

ILL	ALTO No.	REF No.	Description	Spec	Year	Qty	Notes
KT	176670	NA	Piston Kit		00-09	1	3 pistons

NISSAN RE0F09A CVT

JATCO ATCU JF010E 3.0L, 3.5L

2003-On

KITS

*Add Suffix SK for Super Kit

ILL	Description	Years	Friction Module	Steel Module	Overhaul Kit	Banner Kit	Master Kit
KT	Rebuilding Kit - with Molded Pistons	03-On	181752	181753	181800	181901LS	181901
KT	Rebuilding Kit - without Molded Pistons	03-On	181752	181753	181800X	181901XLS	181901X

FRICTION CLUTCHES

ILL	ALTO No.	REF No.	Description	Spec	Year	Qty	Notes
N I	181700	31532-1XD00	Forward	.059/1.5	03-On	4	HEG - 36T - OD: 5.433" - PLNI
N I	181702	31536-1XE00	Reverse	.059/1.5	03-On	4	HEG - 40T - OD: 7.027" - PLNI

STEEL CLUTCHES

ILL	ALTO No.	REF No.	Description	Spec	Year	Qty	Notes
N I	181701	31532-1XD02	Forward	.054/1.37	03-On	4	30T - ID: 4.720"
N I	181703	31666-1XD00	Reverse	.055/1.4	03-On	4	12T - ID: 6.530"

FILTERS

ILL	ALTO No.	REF No.	Description	Spec	Year	Qty	Notes
N I	181944	NA	Filter		03-On	1	

BEARINGS

ILL	ALTO No.	REF No.	Description	Spec	Year	Qty	Notes
N I	181679	NA	Bearing Kit, contains 1-181230, 1-181232, 1-181233		03-On	1	
N I	181230	65TM02AU40AL	Pulley Primary Bearing RE0F09A Murano-Large		03-On	1	Snap ring groove at 69.6mm, special construction, special material 65mm x 100mm x 17mm
N I	181231	HTFB45-111-G-5E CG	Pulley Secondary Bearing RE0F09A Murano-Large		03-On	1	Open bearing, step on OD 45mm x 99/105mm x 18/21mm
N I	181232	32TM12U40AL	Pulley Primary Bearing RE0F09A Murano-Small		03-On	1	Stepped board, special material, no seal 32.2/39.5mm x 84mm x 15mm
N I	181233	HTFB45-90E	Pulley Secondary Bearing RE0F09A Murano-Large		03-On	1	Stepped OD, special material, no seal 45mm x 94/100mm x 18/21mm
N I	181234	VP26Z-1G2UR4	Pulley Secondary Bearing RE0F09A Murano-Small		03-On	1	Stepped OD, special material, no seal 26.8mm x 52mm x 26mm

ELECTRONIC CONTROL COMPONENTS

ILL	ALTO No.	REF No.	Description	Spec	Year	Qty	Notes
NI	176351	31935-8E007	Speed Sensor		00-On	1	

PISTONS

ILL	ALTO No.	REF No.	Description	Spec	Year	Qty	Notes
KT	181670	NA	Piston Kit		03-On	1	2 pistons

HARD PARTS

ILL	ALTO No.	REF No.	Description	Spec	Year	Qty	Notes
KT	181350	NA	Pulley with Belt		03-On	1	
KT	181352	NA	Pulley Set with Belt		03-On	1	

NISSAN RE0F10A CVT

JATCO JF011E 2.0L, 2.4L, 2.5L 2007-On

Nissan, Suzuki, Mitsubishi, Dodge, Jeep

KITS

*Add Suffix SK for Super Kit

ILL	Description	Years	Friction Module	Steel Module	Overhaul Kit	Banner Kit	Master Kit
KT	Rebuilding Kit - with Molded Pistons	07-On	181752	181753A	181804	181905LS	181905
KT	Rebuilding Kit - without Molded Pistons	07-On	181752	181753A	181804X	181905XLS	181905X

FRICTION CLUTCHES

ILL	ALTO No.	REF No.	Description	Spec	Year	Qty	Notes
N I	181700	31532-1XD00	Forward	.059/1.5	07-On	3	HEG - 36T - OD: 5.433" - PLNI
N I	181702	31536-1XE00	Reverse	.059/1.5	07-On	3	HEG - 40T - OD: 7.027" - PLNI

STEEL CLUTCHES

ILL	ALTO No.	REF No.	Description	Spec	Year	Qty	Notes
N I	181701	31532-1XD02	Forward	.054/1.37	07-On	3	30T - ID: 4.720"
N I	181703A140	NA	Reverse	.055/1.4	07-On	3	12T - ID: 6.530"

FILTERS

ILL	ALTO No.	REF No.	Description	Spec	Year	Qty	Notes
N I	181942	0750-131-003	Filter - In-Line Cooler		07-On	1	
N I	181942A	31726-1XZOA	Filter - Nissan Cartridge		07-On	1	
N I	181946	NA	Filter - Suzuki CVT		07-On	1	

ELECTRONIC CONTROL COMPONENTS

ILL	ALTO No.	REF No.	Description	Spec	Year	Qty	Notes
N I	181502	31947-1XF00	Step Motor RE0F10A/JF011E CVT		07-On	1	

MOLDED PISTONS

ILL	ALTO No.	REF No.	Description	Spec	Year	Qty	Notes
N I	181672	NA	Piston Kit		07-On	1	3 pistons

HARD PARTS

ILL	ALTO No.	REF No.	Description	Spec	Year	Qty	Notes
N I	181237	B40-210CG19**UR9	Pulley Bearing RE0F10A		07-On	1	Special Material & Finish 40mm x 80mm x 16mm
N I	181236	RNU208-3 SH	Pulley Bearing RE0F10A secondary		07-On	1	small 18mm x 80mm x 36mm
N I	181238	ZV-HTFB45-108-G - 5ECG7UR4	Pulley Bearing RE0F10A secondary		07-On	1	big 45mm x 90mm x 17mm
N I	181239	HFTB60-57-G-3NRX	Pulley Bearing RE0F10A primary		07-On	1	60mm x 101mm x 17.2mm
N I	181353	901047	CVT Push belt OEM		07-On	1	
		901066					

NISSAN RE0F11A CVT

JATCO JF015E

2010- On

KITS

ILL	Description	Year	Friction Module	Steel Module	Overhaul Kit	Banner Kit	Master Kit
N I	Rebuilding Kit with Molded Pistons	10-On	181752D	181753D	181806	181907X	181907
N I	Rebuilding Kit without Molded Pistons	10-On	181752D	181753D	181806X	181907XLS	181907X

FRICTION CLUTCHES

ILL	ALTO No.	REF No.	Description	Spec	Year	Qty	Notes
N I	181710-163	NA	Forward	.064/1.63	10-On	4	HEG - 30T - OD: 5.095"
N I	181712-163	NA	Reverse	.064/1.63	10-On	4	HEG - 32T - OD: 6.536"
N I	181714-180	NA	Low	.071/5.660	10-On	2	HEG - 36T - OD: 5.660"

STEEL CLUTCHES

ILL	ALTO No.	REF No.	Description	Spec	Year	Qty	Notes
N I	181711-198	NA	Forward	.078/1.98	10-On	5	40T - ID: 4.058"
N I	181713-198	NA	Reverse	.078/1.98	10-On	5	12T - ID: 5.900"
N I	181715-140	NA	Low	.055/1.40	10-On	4	10T - ID: 5.091"

FILTERS

ILL	ALTO No.	REF No.	Description	Spec	Year	Qty	Notes
N I	181948	31728-3JX0A	Filter	Metal	10-On	1	

MOLDED PISTONS

ILL	ALTO No.	REF No.	Description	Spec	Year	Qty	Notes
N I	181673	NA	Molded Piston Kit		10-On	1	2 pistons

NISSAN

GR-6

DUAL CLUTCH

KITS

ILL	Description	Years	Friction Module	Steel Module	Overhaul Kit	Banner Kit	Master Kit
KT	Friction, Steel Module	07-On	209752A	209753A	NA	NA	NA

FRICTION CLUTCHES

ILL	ALTO No.	REF No.	Description	Spec	Year	Qty	Notes
N I	209710-200	NA	A & B Clutch	.079/2.01	07-On	7	G3C - 42T - OD: 6.717"
N I	209710-235	NA	A & B Clutch	.092/2.34	07-On	12	G3C - 42T - OD: 6.717"

STEEL CLUTCHES

ILL	ALTO No.	REF No.	Description	Spec	Year	Qty	Notes
N I	209711-160	NA	A & B Clutch	.063/1.60	07-On	12	32T - ID: 5.511"
N I	209711-200	NA	A & B Clutch	.079/2.01	07-On	1	32T - ID: 5.511"
N I	209711-300	NA	A & B Clutch	.118/3.00	07-On	1	32T - ID: 5.511"

SUBARU

CVT "REX"

1989-On

KITS

*Add Suffix SK for Super Kit

ILL	Description	Years	Friction Module	Steel Module	Overhaul Kit	Banner Kit	Master Kit
KT	Rebuilding Kit	89-On	176752	176753	176800	176901LS	176901

FRICTION CLUTCHES

ILL	ALTO No.	REF No.	Description	Spec	Year	Qty	Notes
N I	176700-160	NA	#1 Reverse Brake	.063/1.6	89-On	2	HEG - 44T - OD: 5.672"
N I	176702-180	NA	#2 Start (Drive)	.071/1.8	89-On	3	HEG - 30T - OD: 5.138"

STEEL CLUTCHES

ILL	ALTO No.	REF No.	Description	Spec	Year	Qty	Notes
N I	176701-200	NA	#1 Reverse Brake	.078/2.0	89-On	2	15T - ID: 4.604"
N I	176703-200	NA	#2 Start (Drive)	.079/2.0	89-On	1	36T - ID: 4.350"
N I	176703A415	NA	#2 Start (Drive)	.070/1.64	89-On	1	36T - ID: 4.350"

TOYOTA

TOYOTA K110

CVT

FILTERS

ILL	ALTO No.	REF No.	Description	Spec	Year	Qty	Notes
N I	186940	35330-0W030	Filter			1	

TOYOTA

TOYOTA K111

CVT

FILTERS

ILL	ALTO No.	REF No.	Description	Spec	Year	Qty	Notes
N I	186942	35330-0W040	Filter			1	

TOYOTA

TOYOTA K310, K313

CVT

FRICTION CLUTCHES

ILL	ALTO No.	REF No.	Description	Spec	Year	Qty	Notes
N I	186710-170	NA	Input	.067/1.7		4	G3BK - 40T - OD: 4.415"- PL

STEEL CLUTCHES

ILL	ALTO No.	REF No.	Description	Spec	Year	Qty	Notes
N I	186711-180	NA	Input	.071/1.8		4	40T - ID: 3.730"

FILTERS

ILL	ALTO No.	REF No.	Description	Spec	Year	Qty	Notes
N I	181946	NA	Filter - K410			1	
N I	186944	35330-0W050	Filter - K310			1	
N I	186944B	NA	Filter - K313			1	

PISTONS

ILL	ALTO No.	REF No.	Description	Spec	Year	Qty	Notes
N I	186301	NA	Forward Apply			1	

VOLKSWAGEN/AUDI

01J, 0AN MULTITRONIC FWD CVT 2001-On

KITS

*Add Suffix SK for Super Kit

ILL	Description	Years	Friction Module	Steel Module	Overhaul Kit	Banner Kit	Master Kit
KT	Rebuilding Kit - with Molded Pistons	98-On	151752	151753	151800	151901LS	151901
KT	Rebuilding Kit - without Molded Pistons	98-On	151752	151753	151800X	151901XLS	151901X

FRICTION CLUTCHES

ILL	ALTO No.	REF No.	Description	Spec	Year	Qty	Notes
N I	151700-203	01J-323-944S	Forward (Lock) - external teeth (retro fit)	.080/2.03	98-On	7	HEG - 30T - ID: 4.332" - WF
N I	151700-270	NA	Forward (Lock) - external teeth	.107/2.72	98-On	6	HEG - 30T - ID: 4.332" - WF
N I	151702-270	NA	Low / Reverse Brake - internal teeth	.107/2.72	98-On	6	HEG - 40T - OD: 7.160" - WF

STEEL CLUTCHES

ILL	ALTO No.	REF No.	Description	Spec	Year	Qty	Notes
N I	151701-195	01J-323-941L	Forward (Lock) - internal teeth	.076/1.93	98-On	4	26T - ID: 5.434"
N I	151701-225	NA	Forward (Lock) - internal teeth	.089/2.26	98-On	1	26T - ID: 5.434"
N I	151701-250	NA	Forward (Lock) - internal teeth	.098/2.49	98-On	2	26T - ID: 5.434"
N I	151703-195	NA	Low / Reverse Brake - external teeth	.076/1.93	98-On	3	3T - ID: 6.398"
N I	151703A195	NA	Low / Reverse Brake - external teeth (3 teeth & 3 tabs)	.076/1.93	98-On	3	3T - ID: 6.398"
N I	151703-225	NA	Low / Reverse Brake - external teeth	.089/2.26	98-On	1	3T - ID: 6.398"
N I	151703-250	NA	Low / Reverse Brake - external teeth	.098/2.49	98-On	3	3T - ID: 6.398"

PRESSURE PLATES

ILL	ALTO No.	REF No.	Description	Spec	Year	Qty	Notes
N I	151761-315	NA	Low / Reverse Brake - top		98-On	1	

FILTERS

ILL	ALTO No.	REF No.	Description	Spec	Year	Qty	Notes
N I	151940	01J-301-519L	Filter		98-On	1	

METAL CLAD SEALS

ILL	ALTO No.	REF No.	Description	Spec	Year	Qty	Notes
N I	151400	NA	Front Pump	30mm	98-On	1	
N I	151401	01J-331-261L	Pinion Shaft	94mm	98-On	1	
N I	151425	016-409-399B	Axle (Final Drive)	60mm	98-On	1	
N I	151402	016-311-1136B	Front Cover (Input)	40mm	98-On	1	
N I	109410	095-321-182B	Manual Lever		98-On	1	

MOLDED PISTONS

ILL	ALTO No.	REF No.	Description	Spec	Year	Qty	Notes
N I	151330	01J-323-121	Reverse Brake		98-On	1	
N I	151331	01J-331-201	Pulley Shaft Rear		98-On	1	
N I	151332	01J-331-191A	Pulley Shaft Front		98-On	1	

HARD PARTS

ILL	ALTO No.	REF No.	Description	Spec	Year	Qty	Notes
N I	151333	01J-331-301BG	Chain, OEM		98-On	1	

Z F

VT1F, CFT25/27 CVT 2002-09
MINI COOPER

KITS

*Add Suffix SK for Super Kit

ILL	Description	Years	Friction Module	Steel Module	Overhaul Kit	Banner Kit	Master Kit
KT	Rebuilding Kit	02-09	082752	082753	082802	082903LS	082903

FRICTION CLUTCHES

ILL	ALTO No.	REF No.	Description	Spec	Year	Qty	Notes
N I	082700SM	NA	Reverse	.098/2.5	02-09	3	Red - 24T - OD: 6.605"-SM
N I	082700SM	NA	Input	.098/2.5	02-09	3	Red - 24T - OD: 6.605"-SM

STEEL CLUTCHES

ILL	ALTO No.	REF No.	Description	Spec	Year	Qty	Notes
N I	082701	NA	Input	.098/2.5	02-09	3	8T - ID: 4.923"
N I	082701	NA	Reverse	.098/2.5	02-09	3	8T - ID: 4.923"

FILTERS

ILL	ALTO No.	REF No.	Description	Spec	Year	Qty	Notes
N I	082944	482211	Filter VT1F, CFT25/27		02-09	1	

DIFFERENTIAL CLUTCHES

FORD ANTIQUE REAR DIFFERENTIAL

ALTO NO	REF NO		SPEC	QTY	YEAR	SPLINE
049720A235	B9AZ-4945A	FRICTION HEG	.093/2.36	AR	AR	Cbn - 45T - OD: 5.250" - WF
399705-130	NA	STEEL	.051/1.3	AR	AR	5 tab - ID: 3.895"

FORD REAR DIFFERENTIAL

ALTO NO	REF NO		SPEC	QTY	YEAR	SPLINE
023716A160	C90W-4797B	FRICTION 8.8" RG HEG	.063/1.6	AR	68-On	46T - OD: 4.887 - WF
023718A200	C90W-4A-325B	FRICTION 8.8" RG HEG 1 SIDE FRICTION EXTERNAL TABS	.082/2.08	AR	68-On	4 tab - ID: 3.955" PL
023717	C80Z-4947A	STEEL 8.8" RG	.050/1.27	AR	68-On	4 tab - ID: 3.955"
399700	F5ZW-4767-AA	FRICTION 7.5" RG HEG	.094/2.39	AR	79-On	2 tab - ID: 2.080" - SM
399701	F5AA-4947-BA F5ZZ-4947-BA	STEEL 7.5" RG INTERNAL SPLNE	.065/1.65	AR	79-On	23T - OD: 3.000"
399702	NA	FRICTION 8.8" RG HEG LONGER TAB	.098/2.49	AR	92-98	Order 399702A (retro fits)
399702A	F5AW-4767-AA	FRICTION 8.8" RG HEG SHORTER TAB	.098/2.49	AR	99-On	2 tab - ID: 2.080" SM
399703	F5AZ-4947-BA	STEEL 8.8" RG INTERNAL SPLINE	.079/2.01	AR	92-On	23T - OD: 3.363"
399704	NA	FRICTION HEG	.109/2.76	AR	AR	2 tab, 2.059" ID, SM
399704A	NA	FRICTION HEG	.087/2.21	AR	AR	HEG, 2 tab, 2.059" ID, SM
399707	NA	STEEL	.069/1.75	AR	AR	23T, 3.596" OD
399711	NA	STEEL	.067/1.70	AR	AR	24T, 3.591" OD
399712	NA	FRICTION	.107/2.71	AR	AR	HEG, 4 tab, 2.528" ID, SM
399713	NA	STEEL	.067/1.70	AR	AR	28T, 4.252" OD
399714	NA	FRICTION HEG	.103/2.61	AR	AR	4 tab, 2.689" ID, SM
399715	F75W-4767-BA	STEEL	.069/1.75	AR	03-On	26T, 3.898" OD
399716	F75W-4767-AA	FRICTION HEG	.099/2.51	AR	79-On	2 tab, 2.372" ID, SM

HONDA/ACURA NSX (MR9A) DIFFERENTIAL

ALTO NO	REF NO		SPEC	QTY	YEAR	SPLINE
078718	41252-PR8-000	FRICTION 4SP HEG	.067/1.7	7	91-On	17T - OD: 3.933" - PL
078719	41252-PR8-000	STEEL 4SP	.100/2.55	6	91-On	26T - ID: 2.825"

SUBARU DIFFERENTIAL

ALTO NO	REF NO		SPEC	QTY	YEAR	SPLINE
042714A180	NA	FRICTION - EXTERNAL SPLINE	.071/1.80	3	NA	30T - ID: 3.149" - SB
042715A160	NA	STEEL - INTERNAL SPLINE	.063/1.60	2	NA	18T - OD: 3.897"- SB
042760	NA	STEEL - 6 SMALL HOLES	.079/2.01	1	NA	0T - ID: 2.559" - SB

TOYOTA A240 4X4 (ALLTRAC) DIFFERENTIAL

ALTO NO	REF NO		SPEC	QTY	YEAR	SPLINE
067702	34201-20030	FRICTION 4WD	.075/1.95	3-4	88-92	Tan - 34T - OD: 4.254" - SM
067703	34201-20030	STEEL 4WD	.071/1.8	3-4	88-92	20T - ID: 3.568"

TOYOTA A540H DIFFERENTIAL

ALTO NO	REF NO		SPEC	QTY	YEAR	SPLINE
065718	41475-32010	FRICTION	.071/1.8	11	89-00	Tan - 36T - OD: 4.508" - SM
065719	41474-32011	STEEL	.063/1.6	11	89-00	30T - ID: 3.561"

TRANSFER CASE CLUTCHES

GM 4L30E

ALTO NO	REF NO	DESCRIPTION	SPEC	QTY	YEAR	SPLINE
138730	NA	FR 4 X 4 1 Side Friction Internal Spline	.065/1.65	6	96-On	Tan - 19T - OD: 5.590" - PLI
138731	NA	FR 4 X 4 1 Side Friction External Spline	.065/1.65	7	96-On	Tan - 31T - ID: 4.727" - PLI

GM 4L60, 4L60E, 4L80E, TH700-R4

ALTO NO	REF NO	DESCRIPTION	SPEC	QTY	YEAR	SPLINE
126700	12547607	FR NEW VENTURE GEAR 136, 236, 246	.086/2.18	10	98-On	Heg - 54T - OD: 6.080" - SM
126701	12547608	ST NEW VENTURE GEAR 136, 236, 246	.067/1.7	10	98-On	12T - ID: 5.023"
126710	19133076	FR MP 3023-NQH TRANS CASE 07+	.063/1.6		07-On	Heg - 54T - OD: 5.742" - PL
126711	19133077	ST MP 3023-NQH TRANS CASE 07+	.59/1.4		07-On	30T - ID: 3.879"
185710-165	88935701	FR NEW VENTURE GEAR 125C, 126C, 225C, 226C 1 Side Friction Internal Spline	.065/1.65	9	02-On	Heg - 50T - ID: 4.989" - SB
185711-165	88935700	FR NEW VENTURE GEAR 125C. 225C 1 Side Friction External Spline	.065/1.65	9	02-On	Heg - 16T - ID: 3.815" - SB

ALLISON WORLD MD300 TRANSFER CASE

ALTO NO	REF NO	DESCRIPTION	SPEC	QTY	YEAR	SPLINE
148710-400	23048735	FR WORLD MD300 C-6	.157/4.0	5	95-On	Heg - 34T - OD: 8.589" - PLI
148711-250	29506073	ST WORLD MD300 C-6	.098/2.5	5	95-On	40T - ID: 7.090"
055702B246	23041097	FR WORLD MD300 C-7	.097/2.46	5	95-On	Crb - 60T - OD: 8.150" - PLI
148709-220	29502156	ST WORLD MD300 C-7	.086/2.2	5	95-On	67T - ID: 6.580"

FORD AOD, AOD-E, 4R70W, 5R55N, 5R55W

ALTO NO	REF NO	DESCRIPTION	SPEC	QTY	YEAR	SPLINE
138730	NA	FR BW4406 1 Side Internal Spline	.065/1.65	5	95-On	Tan - 19T - OD: 5.590" - PLI
138730-195	XL2Z-7C108AA	FR BW4405 1 Side Internal Spline	.077/1.98	5	95-On	Tan - 19T - OD: 5.590" - PL
138731	NA	FR BW4406 1 Side External Spline	.065/1.65	5	95-On	Tan - 31T - ID: 4.727" - PLI
138731-195	XL2Z-7C108AA	FR BW4405 1 Side External Spline	.077/1.98	6	95-On	Tan - 31T - ID: 4.727" - PL

AW50-40/42LE TRANSFER CASE

ALTO NO	REF NO	DESCRIPTION	SPEC	QTY	YEAR	SPLINE
110710-150	NA	FR AW50-40/42LE	.059	AR	89-On	Heg - 61T - OD: 5.870" - PL
110711-150	NA	ST AW50-40/42LE	.059	AR	89-On	66T - ID: 5.220"

AW TR60-SN 6 SPEED

ALTO NO	REF NO	DESCRIPTION	SPEC	QTY	YEAR	SPLINE
185710-165	NA	FR TR60-SN 1 Side Friction Internal	.065/1.65	7	89-94	Heg - 50T - OD: 4.989" - SB
185711-165	NA	FR TR60-SN 1 Side Friction External Spline	.065/1.65	7	89-94	Heg - 16T - ID: 3.815" - SB

MERCEDES 722.9 TRANSFER CASE

ALTO NO	REF NO	DESCRIPTION	SPEC	QTY	YEAR	SPLINE
189734-157	NA	FR MERCEDES 722.9 Internal Spline	.062/1.57	2	04-On	OTHER - 36T - OD: 4.487
189735-120	NA	ST MERCEDES 722.9 External Spline	.047/1.19	3	04-On	8T - ID: 3.306

NISSAN RE4R01A TRANSFER CASE

ALTO NO	REF NO	DESCRIPTION	SPEC	QTY	YEAR	SPLINE
075712	31532-0W410	FR RE4R01A	.078/2.0	8	97-On	Heg - 40T - OD: 6.338" - WF
075715K	31536-0W410	ST RE4R01A	.078/2.0	14	97-On	32T - ID: 4.633"

SUBARU M41, M41A (GUNMA) TRANSFER CASE

ALTO NO	REF NO	DESCRIPTION	SPEC	QTY	YEAR	SPLINE
042706	35188-AA-041 55188-AA-040 35188-AA-000	FR SUBARU M41, M41A 83-94	.115/2.9	3-4	83-94	Tan - 33T - OD: 3.702" - SM
042707	31589-AA-000 44646-7000	ST SUBARU M41, M41A 83-94	.071/1.8	2-3	83-94	48T - ID: 2.837"

SUBARU 4 SPEED TRANSFER CASE

ALTO NO	REF NO	DESCRIPTION	SPEC	QTY	YEAR	SPLINE
075710	31588-AA-020	FR SUBARU 4 SPEED	.078/2.0	5	98-On	Tan - 24T - OD: 4.646" - PL
075720-180	31588-AA070	FR SUBARU 4 SPEED	.071/1.8	AR	Various	Tan - 50T - OD: 4.646" - SM
075711K160	31589-AA040 31589-AA041	ST SUBARU 4 SPEED - Kolene®	.063/1.6	6	98-On	Kolene® - 30T - ID: 4.117"
075711-200	31589AA-050	ST SUBARU 4 SPEED selective	.078/2.0	AR	98-On	30T - ID: 4.117"
075711-240	31587AA-060	ST SUBARU 4 SPEED selective	.095/2.4	AR	98-On	30T - ID: 4.117"
075711-280	31589AA-070	ST SUBARU 4 SPEED selective	.110/2.8	AR	98-On	30T - ID: 4.117"

SUBARU R4AX-EL TRANSFER CASE

ALTO NO	REF NO	DESCRIPTION	SPEC	QTY	YEAR	SPLINE
075710	31588-AA-020	FR SUBARU R4AX-EL (Loyale)	.078/2.0	AR	87-93	Tan - 24T - OD: 4.646" - PL
075710-180	31588-AA-060	FR SUBARU R4AX-EL (Impressa/Legacy/SVX)	.071/1.8	AR	91-98	Tan - 24T - OD: 4.646" - SM
075720-180	31588-AA070	FR SUBARU R4AX-EL	.071/1.8	AR	Various	Tan - 50T - OD: 4.646" - SM
075711	31589-AA-030	ST SUBARU R4AX-EL TC (Loyale)	.071/1.8	AR	87-93	30T - ID: 4.117"
075711-160	31589-AA-040 31589-AA-041	ST SUBARU R4AX-EL TC (Impressa/Legacy/SVX)	.063/1.6	AR	90-94	30T - ID: 4.117"
075711K200	NA	ST SUBARU R4AX-EL Kolene®	.078/2.0	AR	87-98	Kolene® - 30T - ID: 4.117"
075711-200	31589AA-050	ST SUBARU R4AX-EL selective	.078/2.0	AR	87-98	30T - ID: 4.117"
075711-240	31587AA-060	ST SUBARU R4AX-EL selective	.095/2.4	AR	87-98	30T - ID: 4.117"
075711-280	31589AA-070	ST SUBARU R4AX-EL selective	.110/2.8	AR	87-98	30T - ID: 4.117"

TOYOTA A340 TRANSFER CASE

ALTO NO	REF NO	DESCRIPTION	SPEC	QTY	YEAR	SPLINE
073712	34653-35020 34653-35010	FR TOY A340 DIRECT (C3), FRONT (C4)	.067/1.7	6/6	88-95	Heg - 44T - OD: 5.597" - SM
073714	35683-35020 34683-35010	FR TOY A340 LOW SPEED BRAKE (B4)	.067/1.7	7	88-95	Tan - 53T - OD: 6.808" - SM
073713	34656-35010	ST TOY A340 DIRECT (C3), FRONT (C4)	.071/1.8	5/6	88-95	29T - ID: 4.580"
073713-255	34656-35020	ST TOY A340 DIRECT (C3) selective	.100/2.55	5	88-95	29T - ID: 4.580"
073715	34686-35010	ST TOY A340 LOW SPEED BRAKE (B4)	.071/1.8	4-6	88-95	8T - ID: 5.954"

ZF5HP24 TRANSFER CASE

ALTO NO	REF NO	DESCRIPTION	SPEC	QTY	YEAR	SPLINE
053716	NA	FR ZF4HP24A AUDI	.062/1.55	6	89-94	Heg - 18T - OD: 4.680" - PL
053717	NA	ST ZF4HP24A AUDI	.082/2.1	6	89-94	12T - ID: 2.444"
053765J	NA	ST ZF4HP24A AUDI BOTTOM PLATE	.082/2.1	1	89-94	12T with Holes in Teeth

TORQUE CONVERTER

ALTO#	REF#	DESCRIPTION	OAT	QTY	NOTES
GENERAL MOTORS					
6T40/6T45					
129320	BW-SP-5	SPRAG, TORQUE CONVERTER 236mm 04+		1	22 ELEMENT
6L45E					
201714	NA	FR GM 6L45E TORQ CONV 210MM	.138/3.51	1	Heg - 24T - ID: 8.700"
CHRYSLER					
68RFE					
128714	CH-CP-1	FR CHRYSLER 68RFE 07+	0.16/4.06	4	Heg - 35T - ID: 10.150"
AS68RC					
202759	NA	FR/ST PACK AS68RC 3500 TRUCK 07+ Includes Friction, Steel, PP		1	
202714	AS-CP-1FK	FR AS68RC 3500 TRUCK 07+	.100/2.54	3	Red - 36T - OD: 7.438" - SPR
202715	AS-CP-2SK	ST AS68RC 3500 TRUCK 07+	.071/1.80	3	16T - ID: 6.254"
202760	NL	ST AS68RC 3500 TRUCK 07+	.249/6.32	1	16T - ID: 6.254"
AS69RC					
202716	NA	FR AS69RC 14+	.100/2.54	3	Heg - 42T - OD: 8.550" - SPR
202717	NA	ST AS69RC 14+	0.071/1.80	3	16T - ID: 7.340"
AISIN					
A581					
168712-315	NA	FR A581 TORQ CONV 01+	0.124/3.14	1	Heg - 50T - OD: 9.800"
AW 55-50SN					
159320	BW-SP-3	SPRAG TORQUE CONVERTER 23 ELEMENT		1	
AW TF-60SN					
56835	NA	DSEAL KIT MT643 TORQUE CONVERTER 72+		1	contains 5 seals
129320	BW-SP-5	SPRAG, TORQUE SONVERTER 236mm 04+		1	22 ELEMENT
A40045TCU25	VW-O-3	SEALING RING TORQ CONV AW TF-60SN 1.561 X 1.373 X .090"	.090/2.30	1	TEFLON, SCARF CUT
TF-80SC					
197320	BW-SP-2	SPRAG, TORQUE CONVERTER 05+		1	24 ELEMENT
TF-80SD					
197320	BW-SP-2	SPRAG, TORQUE CONVERTER 05+		1	24 ELEMENT
AW 450-43LE					
153320	NA	SPRAG, TORQUE CONVERTER 98+		1	
ALLISON					
MT640, 643, 644, 650, 653, 654					
055055	23016564	Lathe Cut, Lockup clutch backing plate 72+		1	
056301	6770845	Piston, Lockup clutch TORQUE CONV 72+		1	
056835	NA	SEAL KIT MT643 TORQUE CONV 72+		1	contains 5 seals
FORD					
6R80					
183718A	NA	FR 6R80 TORQUE CONVERTER EXT 07+	.167/4.24	1	G3C- 40T - ID: 8.706"

TORQUE CONVERTER

ALTO#	REF#	DESCRIPTION	OAT	QTY	NOTES
HONDA					
MT4A					
129320	BW-SP-5	SPRAG, TORQUE SONVERTER 236mm 04+		1	22 ELEMENT
172715	HO-CP-2	ST HONDA MT4A TORQUE CONVERTER	.047/1.19	1	36T - ID: 7.173"
HYUNDAI/KIA					
A5HF1					
197320	BW-SP-2	SPRAG, TORQUE CONVERTER 05+		1	24 ELEMENT
MERCEDES					
722.6/ 722.9 Early Generation					
141714	MB-CP-7BW	FR 722.6 TORQUE CONVERTER SEL. 96+	.107/2.70	1-2	Red - 34T - OD: 6.929" - SB
141714X	MB-CP-7BW	FR 722.6 TORQUE CONVERTER 96+	.107/2.70	1-2	Red - 34T - OD: 6.929" - SB
141714X232	MB-CP-5	FR 722.6 TORQUE CONVERTER SEL. 96+	.091/2.32	AR	Red - 34T - OD: 6.929" - SB
141714-200	NA	FR 722.6 TORQ CONV PPK 96+	.078/1.98	1-2	Red - 34T - OD: 6.929" - SB
141714-232	MB-CP-5	FR 722.6 TORQUE CONVERTER SEL. 96+	.091/2.32	1-2	Red - 34T - OD: 6.929" - SB
141715-177	MB-CP-3KR	ST 722.6 TORQUE CONVERTER 96+	.069/1.75	AR	20T - ID: 5.629"
141715AK177	NA	ST 722.6 TORQUE CONVERTER PPK 96+	.069/1.75	3	20T - ID: 5.629"
141715-390	MB-CP-4K	ST 722.6 TORQUE CONVERTER 96+	.155/3.95	AR	20T - ID: 5.629"
141715-497	NA	ST 722.6 TORQUE CONVERTER 96+	.196/4.97	AR	20T - ID: 5.629"
141758	MB-CP-272KBW	KIT 722.6 TORQ CONV 272MM Includes 2 Frictions, 3 Steels, and Ring/Seal Kit 96+		1	
141758A	NA	KIT 722.6 TORQ CONV 290MM Includes 2 Frictions, 3 Steels, and Ring/Seal Kit 96+		1	
141759	NA	KIT 722.6 TORQ CONV PPK Includes 3 Frictions, 4 Steels, Snapring, and Ring/Seal Kit 96+		1	
722.7					
147714	NA	FR 722.7 TORQUE CONV 30 SQUARE TOOTH 98+	.106/2.69	AR	Heg - 30T - ID: 6.930" - SB
147714A	NA	FR 722.7 TORQUE CONV SQUARE TOOTH 2.79MM	.110/2.79	AR	Heg - 30T - ID: 6.930" - SB
722.9 Late Generation					
141718A	MB-CP-8	FR 722.9 TORQUE CONVERTER	.109/2.77	2	Heg - 40T - ID: 6.104" - SB
141719A	MB-CP-15S	ST 722.9 TORQUE CONVERTER	.078/1.98	3	36T - OD: 7.400"
141719A180	MB-CP-14S	ST 722.9 TORQUE CONVERTER	.071/1.80	3	36T - OD: 7.400"
RENAULT					
DPO/AL4					
155325	RE-SP-1	SPRAG, TORQUE CONVERTER 97+		1	
155714	NA	FR DPO/AL-4 TORQUE CONVERTER 97+	.139/3.53	AR	Red - 24T - ID: 6.64" - SM
155716	RE-CP-2	FR DPO/AL-4 TORQUE CONVERTER 05+	.159/4.04	AR	Red - 24T - OD: 8.750"
155718	NA	FR DPO/AL-4 TORQUE CONVERTER 05+	.106/2.69	1	Red - 40T - ID: 7.361" - CUP
NISSAN					
RE5R05A					
174759	NA	RE5R05A TORQ CONV REPAIR KIT Includes Friction, Steel, PP and Ring/Seal Kit 02+			
174712-188	JA-CP-1	FR RE5R05A TORQUE CONV 02+	.074/1.88	3	Heg - 40T - OD: 6.474" - SB

TORQUE CONVERTER

ALTO#	REF#	DESCRIPTION	OAT	QTY	NOTES
NISSAN continued					
174713-178	JA-CP-2	ST RE5R05A TORQUE CONV 02+	.070/1.78	4	36T - ID: 5.610"
174762	NA	ST RE5R05A TORQUE CONV PP 02+	.258/6.55	1	35T - ID: 5.607"
174835	NA	RE5R05A RING AND SEAL KIT			
RE7R01A					
174759A	NA	RE7R01A TORQ CONV REPAIR KIT Includes Friction, Steel, and PP 09+		1	
174722-180	JA-CP-4	FR RE7R01A TC 09+	.071/1.80	3	Heg - 24T - OD: 6.825"
174723-180	NA	ST RE7R01A TC 09+	.071/1.80	3	30T - ID: 5.607"
174762A	NA	ST RE7R01A TC PP 09+		1	30T - ID: 5.609"
TOYOTA					
AB60E/F					
A40045TCU25	VW-O-3	SEALING RING TORQ CONV TOY AB60E/F 1.561 X 1.373 X .090"	.090/2.30	1	TEFLON, SCARF CUT
VOLKSWAGEN					
TR60-SN					
185714-262	NA	FR TR60-SN TORQ CONV 04+	.103/2.62	1	TAN- 30T- OD: 7.033"
185715-235	NA	ST TR60-SN TORQ CONV 04+	.092/2.34	1	48T - ID: 5.862"
185716	AW-CP-6F	FR TR60-SN TORQ CONV 04+	.147/3.73	2	
185717-320	AW-CP-4S	ST TR60-SN TC .126" 04+	.126/3.20	1	20T - ID: 8.760"
TR60-SN					
185717-500	AW-CP-5PX	ST TR60-SN TC .197" 04+	.197/5.00	1	20T - ID: 8.760"
185765-380	NA	ST TR60-SN TORQ CONV PP 04+	.150/3.81	1	48T - ID: 5.862"
ZF					
4HP24					
183320	BW-SP-4	Sprag, Torque Converter 83+ Captive Clutch, Single Friction		1	18 ELEMENT
5HP19					
139714	FS-CP-2	FR ZF5HP19 TORQUE CONVERTER 95+	.122/3.10	AR	Red - 24T - ID: 8.153" - grooved
139714A	NA	FR ZF5HP19 TORQUE CONVERTER 95+	.122/3.1	AR	HEG- 24T - ID: 8.379"
139714A350	FS-CP-2TKR	FR ZF5HP19 TORQUE CONVERTER 95+	.138/3.5	AR	HEG- 24T - ID: 8.379"
183320	BW-SP-4	Sprag, Torque Converter		1	18 ELEMENT
5HP24					
132714	FS-CP-3	FR ZF5HP24 TORQUE CONVERTER 95+	.120/3.04	AR	Tan - 24T - ID: 8.379" - SM
132714A	FS-CP-3	FR ZF5HP24 TORQUE CONVERTER 95+	.120/3.04	AR	Red - 24T - ID: 8.379" - SM
132714-386	FS-CP-3	FR ZF5HP24 TORQUE CONVERTER 95+	.120/3.86	AR	Tan - 24T - ID: 8.379" - SM
5HP30					
113714	FS-CP-1	FR ZF5HP30 TORQUE CONVERTER 93+	.118/3.00	AR	Red - 24T - OD: 9.354" - SM
113714-450	FS-CP-4C	FR ZF5HP30 TORQUE CONVERTER 93+	.177/4.50	AR	Red - 24T - OD: 9.354" - SM
113714C300	FS-CP-1C	FR ZF5HP30 TORQUE CONVERTER 93+	.118/3.00	AR	Carbon - 24T - OD: 9.354" - SM

TORQUE CONVERTER

ALTO#	REF#	DESCRIPTION	OAT	QTY	NOTES
ZF continued					
6HP19					
183320	BW-SP-4	Sprag, Torque Converter 83+ (245mm and 255mm)		1	18 ELEMENT
183715	ZF-CP-7	ST Z6HP19 TORQUE CONVERTER 02+	.108/2.74	1	24T - OD: 7.570" - grooved
143714	FS-CP-7BW	FR ZF6HP19 TORQ CONV 245MM 04+	.157/3.99	1	Heg - 24T - ID: 7.874" with cutouts
143716	ZF-ZP-13	FR ZF6HP19 TORQ CONV 245MM	.140/3.56	1	Heg - 24T - ID: 8.350" - spiral
6HP21					
143714A	ZF-CP-12	FR ZF6HP21 TORQ CONV 245MM	.140/3.56	1	Heg - 42T - OD: 8.661"
6HP26					
183320	BW-SP-4	Sprag, Torque Converter 83+ (280mm)		1	18 ELEMENT
183714	FS-CP-56BW	FR ZF6HP26 TORQ CONV 260MM 02+	.160/4.06	1	KEV - 24T - ID: 8.200" with cutouts
183714A	ZF-CP-6	FR ZF6HP26 TORQ CONV 280MM 02+	.160/4.06	1	KEV - 24T - ID: 8.725" with cutouts
183715	ZF-CP-7	ST ZF6HP19/26 TORQ CONV 255MM 02+	.108/2.74	1	24T - OD: 7.570" - grooved
183716	ZF-CP-4	FR ZF6HP19/26 TORQ CONV 255MM 02+	.140/3.56	2	Heg - 24T - ID: 6.300" with cutouts
183720	ZF-CP-5	ZF6HP26 TORQ CONV 275MM 02+	.106/2.69	1	Heg - 20T - ID: 7.283" with cutouts
183722	ZF-CP-2	ZF6HP26/28 TORQ CONV 280MM 02+	.160/4.06	1	Heg - 24T - ID: 8.782" with bent tooth
183724	ZF-CP-1	ZF6HP26 TORQ CONV 255MM 02+	.145/3.68	1	Heg - 24T - ID: 6.300"
6HP28					
TBA	NA	ZF6HP28 TORQ CONV (BMW 750/760) 05+	.157/3.99	1	Heg - 24T - ID: 8.779" with cutouts
183320	BW-SP-4	Sprag, Torque Converter 83+		1	18 ELEMENT
183722	ZF-CP-2	ZF6HP26/28 TORQ CONV 280MM	.160/4.06	1	Heg - 24T - ID: 8.782" with bent tooth
8HP45					
215614	NA	SEAL KIT ZF8HP45 TORQUE CONVERTER INNER/OUTER		1	(Contains 1-A50030 Small, 1-A20027B Large)
A20027B	NA	ZF8HP45 MOLDED RUBBER OUTER TORQ CONV SEAL "D" RING - Large		1	188.42 X 197.3 X 1.83
A50030	NA	ZF8HP45 MOLDED RUBBER INNER TORQ CONV SEAL Small		1	102mm ID
215714	ZF-CP-8F	ZF8HP45 TORQUE CONVERTER 11+ SEG	0.096/2.44	1	GRY- 80T- OD: 7.766 SEG
215715-175	ZF-CP-9SX	ZF8HP45 TORQUE CONVERTER 11+	.069/1.75	1	30T - ID: 6.498"
215715-277	ZF-CP-10SX	ZF8HP45 TORQUE CONVERTER 11+	.109/2.77	1	30T - ID: 6.498"
215765	ZF-CP-11SX	ZF8HP45 TORQUE CONVERTER PP 11+	.168/4.27	1	30T - ID: 6.498"
ECOMAT					
121705A200	4139-373-029	ST ZF5HP500 F PACK WIDER TOOTH NO HOLES 90+	.079 / 2.00	AR	24T - ID: 9.320"
121706	4166-238-037	FR TORQUE CONV HEG SB Except 6HP600, 5HP590 90+	.118 / 3.00	2	Grn - 18T - OD: 12.930" - SM
121706A320	NA	FR TORQUE CONV HEG 90+ (6HP600)	.124 / 3.15	2	Heg - 36T - OD: 15.398" - PL
121706C310	4166-236-134	FR W360 TORQUE CONV	.122 / 3.10	AR	Heg - 59T - OD: 12.96"
121706D310	0501-212-249	FR TORQUE CONV 90+	.123 / 3.12	1	66T - OD: 15.009"
121707	4139-334-004	ST TORQUE CONV 90+ Except 6HP600	.079 / 2.00	AR	12T - ID: 11.887"
121707-300	NA	ST TORQUE CONV 90+ Except 6HP600	.118 / 3.00	AR	12T - ID: 11.887"
121707-350	4139-334-006	ST TORQUE CONV 90+ Except 6HP600	.138 / 3.50	AR	12T - ID: 11.887"

TORQUE CONVERTER

ALTO#	REF#	DESCRIPTION	OAT	QTY	NOTES
ECOMAT continued					
121707-400	4139-334-005	ST W360 TORQUE CONV 90+	.157 / 3.99	AR	12T - ID: 11.887"
121707A250	NA	ST TORQUE CONV 90+ 6HP600	.098 / 2.50	2	36T - ID: 14.313"
121707A300	4166-338-202	ST TORQUE CONV 90+ 6HP600	.118 / 3.00	1	36T - ID: 14.313"
121707B400	0501-320-306	ST TORQUE CONV 12 TEETH 90+	.157 / 4.00	AR	12T - ID: 11.800"
121707D405	0501-318-589	ST TORQUE CONV 90+	.159 / 4.04	1	8T - ID: 13.224"
121716-305	0501-213-150	FR 5HP590 TORQ CONV 59T 90+	.079 / 2.00	6-8	Heg - 59T - OD: 13.365" - PLNI
VOITH					
125714	58.2250.13 58.2250.12	FR TORQUE CONVERTER	.138/3.50	3	Brz - 63T - OD: 12.51" - Sprl
125715	50.9743.13	ST TORQUE CONVERTER	.098/2.50	4	12T - ID: 10.429"

Brass Compression Fittings

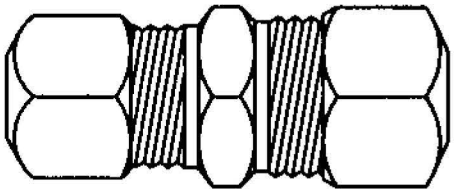

ALTO#	Size
057107	5/16” to 5/16”
099053DE	5/16” to 3/8”

Cooler Line Retainer Clip

ALTO#	Transmission
M001001	4L60E, 4L80E

RETAINER

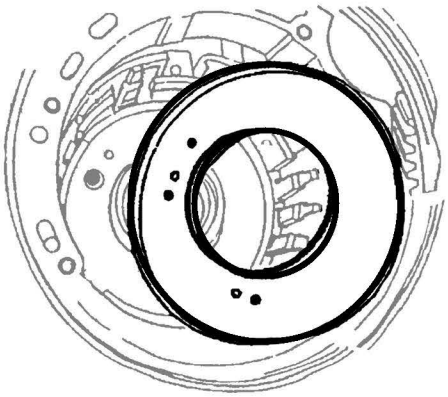

ALTO #	Description	REF #	YEAR
077360A	Retainer, Low / Reverse Piston	4431648	88-On

BOLTS

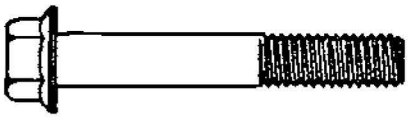

ALTO#	Description
031315	4L80E

BOLTS

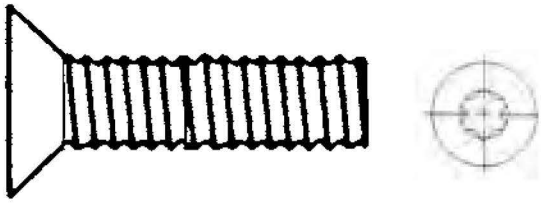

ALTO#	Description	Dimensions
053315	ZF4HP22 F” Drum to Case	M6 x 15

ALTO#	Description
057315-057315UP8	4L60E Bell Housing to Case Torx Plus®, 1999-On

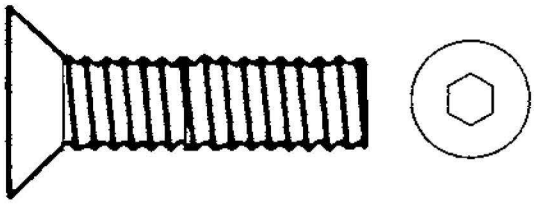

ALTO#	Description	Dimensions
059315	KM175, 177, F4A21 23 Overdrive (F) Drum to Case	M8 x 20

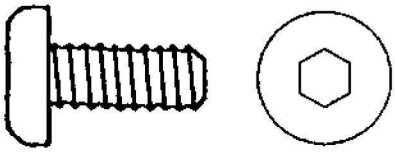

ALTO#	Description	Dimensions
068315	RL4F02A Pump Stator & Bearing Retainer	M8 x 21

ALTO#	Description	Dimensions
077315	A604 Low/Reverse Retainer	M5 x 11

	ALTO #	DESCRIPTION	Lubegard #	UNIT SIZE	CASE QTY
		LUBEGARD® with LXE®			
	099351	TRANSMISSION FLUID (ATF) PROTECTANT - RED	60902	10 OZ	12
	099351A	TRANSMISSION FLUID (ATF) PROTECTANT - RED	50902	32 OZ	6
	099395	DUAL CLUTCH TRANSMISSION FLUID (DCT)	56032	32 OZ	6
	099352	HIGHLY FRICTION MODIFIED ATF SUPPLEMENT - BLACK	61910	10 OZ	12
	099364	MERCON 5 ATF SUPPLEMENT	62005	10 OZ.	12
	099368	UNIVERSAL FLUID (ATF) PROTECTANT-PLATINUM	63010	10 OZ	12
	099368A	UNIVERSAL FLUID (ATF) PROTECTANT-PLATINUM	63016	15 OZ	12
	099368B	UNIVERSAL FLUID (ATF) PROTECTANT-PLATINUM	63032	32 OZ	6

	ALTO #	DESCRIPTION	Lubegard #	UNIT SIZE	CASE QTY
	099368X	UNIVERSAL FLUID PROTECTANT-CVT (BELT TYPE)	68112	32 OZ	6
	099387	COMPLETE FULL SYNTHETIC ATF 32 OZ (6) 69032	69032	32 OZ	6
	099356	VALVE & ASSEMBLY LUBRICANT	61016	16 OZ	6
	099356A	VALVE & ASSEMBLY LUBRICANT	61128	1 GAL	4
	099369	AUTOMATIC TRANS FLUSH	95001	10 OZ	12
	099353	GEAR FLUID SUPPLEMENT	30903	8 OZ	12
	099354A	LIMITED SLIP SUPPLEMENT	31904	4 OZ	12
	099379	LIMITED SLIP SUPPLEMENT (CLAM SHELL)	31920	4 OZ	12
	099350A	ENGINE OIL PROTECTANT BLUE	30902	10 OZ	12
	099350	ENGINE OIL PROTECTANT-BLUE	30901	15 OZ	12

	ALTO #	DESCRIPTION	Lubegard #	UNIT SIZE	CASE QTY
	099350	ENGINE OIL PROTECTANT-BLUE	30901	15 OZ	12
	099370	ENGINE FLUSH	95030	15 OZ	12
	099365	FREE-EZE	30990	15 OZ	12
	099358A	TWO-CYCLE ENGINE OIL	12932	32 OZ	6
	099357B	POWER STEERING FLUID SUPPLEMENT	20404	4 OZ	12
	099357A	POWER STEERING FLUID	20910	10 OZ	12
	099357	POWER STEERING FLUID	20902	32 OZ	6
	099372	POWER STEERING FLUSH	95040	4 OZ	12
	099383A	SEAL-E-ZEE STEP 1	19500	5 OZ	12
	099394	SEAL-E-ZEE STEP 1A	19502	16 OZ	12
	099383B	SEAL-E-ZEE STEP 2	19501	5 OZ	12
	099383	SEAL-E-ZEE COMBO PACK (1 EA Step 1 & 2)	19522	--	12
	099392A	SEAL-E-ZEE APPLICATION CONE KIT	19222	--	4
	099359	LUBE 'N LOOSEN (Unit Size changed from 4 oz to 8 oz)	61444	8 OZ	12

	ALTO #	DESCRIPTION	Lubegard #	UNIT SIZE	CASE QTY
		Dr. Tranny™			
	099363	DR. TRANNY INSTANT SHUDDER FIXX	19610	2 OZ	24
	099380	INSTANT SHUDDER FIXX (CLAM SHELL)	19680	2 OZ	12
	099361	DR TRANNY GOO GREEN	19250	16 OZ	12
	099361A	DR. TRANNY ASSEMBLEE GOO BLUE (SOFT)	19260	16 OZ	12
	099360	DR. TRANNY KOOLER KLEEN	19001	13.25 OZ	12
	099381	TRANSMISSION ASSEMBLY TREATMENT	19420	8 OZ	12
		KOOL-IT®			
	099371	KOOL-IT COOLANT TREATMENT	96001	16 OZ	12
	099377	KOOL-IT RADIATOR FLUSH	95020	16 OZ	12
	099376	EVAPORATOR FOAM CLEANER	96030	6 OZ	6
		Squeak Relief®			
	099373	SQUEAK RELIEF BRAKE FINISHING TREATMENT	90031	2 OZ	12

	ALTO #	DESCRIPTION	Lubegard #	UNIT SIZE	CASE QTY
		PRO II 9000®			
	099382	COMPLETE FUEL SYSTEM CLEANER (2 CAN KIT)	72400	6 PACKS	
	099386A	AIR-INTAKE THROTTLE PLATE CLEANER (STEP 1)	72111	6	12
	099386B	INTAKE VALVE & COMBUSTION CHAMBER CLEANER (STEP 2)	72222	12	12
		Flush & Protect Performance Packs			
	099375D	1 - 60902 ATF PROTECTANT 1 - 95001 AUTOMATIC TRANSMISSION FLUSH	98602	6 PACKS	
	099375F	1 - 63010 PLATINUM UNIVERSAL ATF PROTECT 1 - 95001 AUTOMATIC TRANSMISSION FLUSH	98010	6 PACKS	
	099375B	1 - 20404 POWER STEERING FLUID PROTECTANT 1 - 95040 POWER STEERING FLUSH	98404	6 PACKS	
	099375C	1 - 30901 ENGINE OIL PROTECTANT 1 - 95030 ENGINE FLUSH	98901	6 PACKS	
	099375G	1 - 96001 KOOL-IT COOLANT TREATMENT 1 - 95020 KOOL-IT RADIATOR FLUSH	98001	6 PACKS	

WE ARE PLEASED TO ANNOUNCE OUR
ISO 14001 CERTIFICATION - International Standard for Environmental Management Systems
ISO/TS16949 CERTIFICATION - International Automotive Quality System Standard

We are proud of our entire team for enabling us to achieve these certifications

Automatic and Standard Clutches • Rebuilding Kits • OEI Products • Hi-Performance Clutches • Friction Material

ORIGINAL HI-PERFORMANCE TRANSMISSION PRODUCTS

One Alto Way • Atmore • AL • 36502 • USA • Phone: 251.368.7777 • Fax: 251.368.7774 • sales@altoUSA.com • www.altoUSA.com